2019 HARLEY-DAVIDSON® SERVICE MANUAL: SOFTAIL® MODELS

- Foreword
  - Foreword
    - General
    - Manual Layout
    - How to Use This Service Manual
    - Preparation For Service
    - Use Genuine Replacement Parts
    - Shop Practices
    - Cleaning
    - Disposal and Recycling
    - Tools and Materials
    - Product Registered Marks
    - H-D U.S.A., LLC Trademark Information
    - Contents
- Safety
  - Safety
    - Safety
- Maintenance
  - FASTENER TORQUE VALUES
    - Fastener Torque Values in this Chapter
  - GENERAL
    - Servicing a Motorcycle
    - Secure the Motorcycle for Service
  - MAINTENANCE SCHEDULE
    - General -[JPN]
  - FUEL AND OIL
    - Fuel
    - Gasoline Blends
    - Engine Lubrication
    - Winter Lubrication
  - REPLACE ENGINE OIL AND FILTER
    - Check Engine Oil Level
    - Change Oil and Oil Filter
  - REPLACE PRIMARY CHAINCASE LUBRICANT
    - Change Primary Chaincase Lubricant
  - REPLACE TRANSMISSION LUBRICANT
    - Check Transmission Lubricant
    - Change Transmission Lubricant
  - INSPECT TIRES AND WHEELS
    - General
    - Tires
    - Wheel Bearings
    - Wheel Spokes
  - LUBRICATE CABLES AND CHASSIS
    - General
    - Lubrication Points
  - INSPECT BRAKES
    - Inspect
    - Replace Front Brake Pads
    - Replace Rear Brake Pads
  - CHECK AND REPLACE BRAKE FLUID
    - Check Brake Fluid Level
    - Drain and Replace Fluid

- CHECK AND ADJUST CLUTCH
  - Check and Adjust
- REBUILD FRONT FORK AND REPLACE OIL
  - Rebuild and Replace Fork Oil
- ADJUST AND LUBRICATE STEERING HEAD BEARINGS
  - Prepare
  - Check and Adjust
  - Lubricate
  - Complete
- INSPECT FUEL LINES AND FITTINGS
  - Inspect
- INSPECT AND LUBRICATE JIFFY STAND
  - Inspect and Lubricate
- INSPECT AND ADJUST DRIVE BELT AND SPROCKETS
  - Inspect
  - Measure Drive Belt Deflection
  - Adjust Belt
- ADJUST SUSPENSION
  - Adjust Shock Absorber
- INSPECT EXHAUST SYSTEM
  - Leak Check
- INSPECT AIR FILTER
  - Remove and Install: Round +[2019 BREAKOUT (FXBR), 2019 DELUXE (FLDE), 2019 FAT BOB (FXFB), 2019 FAT BOY (FLFB), 2019 HERITAGE CLASSIC (FLHC), 2019 LOW RIDER (FXLR), 2019 SOFTAIL SLIM (FLSL), 2019 SPORT GLIDE (FLSB), 2019 STREET BOB (FXBB)]
  - Remove and Install: Oval +[2019 BREAKOUT 114 (FXBRS), 2019 FAT BOB 114 (FXFBS), 2019 FAT BOY 114 (FLFBS), 2019 HERITAGE CLASSIC 114 (FLHCS)]
  - Remove and Install: Square +[2019 FXDR 114 (FXDRS)]
  - Clean and Inspect
- INSPECT BATTERY
  - Prepare
  - Remove
  - Install
  - Clean and Inspect
  - Voltage Test
  - Storage
  - Complete
- CLEAN AND INSPECT SPARK PLUGS
  - Prepare
  - Remove
  - Clean and Inspect
  - Install
  - Complete
- STORAGE
  - Place in Storage
  - Remove from Storage
- TROUBLESHOOTING
  - Engine
  - Lubrication System
  - Electrical System
  - Transmission
  - Handling
  - Brakes

- Chassis
  - FASTENER TORQUE VALUES
    - Fastener Torque Values in this Chapter
  - SPECIFICATIONS

    - Chassis
- VEHICLE IDENTIFICATION NUMBER (VIN)
    - Vehicle Identification Number (VIN)
- FRONT WHEEL
    - Prepare
    - Remove
    - Install
    - Disassemble
    - Clean and Inspect
    - Assemble
    - Complete
- REAR WHEEL
    - Prepare
    - Remove
    - Install
    - Disassemble
    - Clean and Inspect
    - Assemble
    - Complete
- WHEEL LACING
    - Wheel Lacing: Angle Flange Hub
- CHECKING AND TRUING WHEELS
    - General
    - Checking Wheel Runout
    - Laced Wheel Rim Offset
    - True Laced Wheels
- SEALED WHEEL BEARINGS
    - Prepare
    - Inspect
    - Remove
    - Install
    - Complete
- TIRES
    - General
    - Prepare
    - Remove
    - Clean, Inspect and Repair
    - Install
    - Check Tire Runout
    - Balance
    - Complete
- WHEEL ALIGNMENT
    - Prepare
    - Inspect
    - Adjust
    - Complete
- FRONT BRAKE MASTER CYLINDER
    - Prepare
    - Remove
    - Install
    - Disassemble
    - Clean and Inspect
    - Assemble
    - Complete
- FRONT BRAKE CALIPER
    - Prepare
    - Remove
    - Install

    - Disassemble
    - Clean and Inspect
    - Assemble
    - Complete
- REAR BRAKE MASTER CYLINDER
    - Prepare
    - Remove
    - Install
    - Disassemble and Assemble: Master Cylinder
    - Complete
- REAR BRAKE CALIPER
    - Prepare
    - Remove
    - Install
    - Disassemble
    - Clean and Inspect
    - Assemble
    - Complete
- BRAKE LINES
    - Front Brake Line: Non-ABS
    - Rear Brake Line: Non-ABS
    - Brake Line: Front Master Cylinder (ABS)
    - Brake Line: Front Caliper (ABS)
    - Front ABS Lines
    - Brake Line: Rear Master Cylinder to ABS Module
    - Brake Line: Rear Caliper to ABS Module
- ABS MODULE
    - General
    - Prepare
    - Remove
    - Install
    - Complete
- BLEED BRAKES
    - Drain
    - Fill and Bleed
- LEFT SIDE COVER
    - Remove
    - Install
- RIGHT SIDE COVER
    - Remove
    - Install
- FRONT FORK
    - Check For Oil Leak
    - Prepare
    - Remove
    - Install
    - Disassemble and Assemble: Standard -[2019 FAT BOB (FXFB), 2019 FAT BOB 114 (FXFBS), 2019 FXDR 114 (FXDRS), 2019 SPORT GLIDE (FLSB)]
    - Disassemble and Assemble: Inverted, Left Side +[2019 FAT BOB (FXFB), 2019 FAT BOB 114 (FXFBS), 2019 FXDR 114 (FXDRS), 2019 SPORT GLIDE (FLSB)]
    - Disassemble and Assemble: Inverted, Right Side +[2019 FAT BOB (FXFB), 2019 FAT BOB 114 (FXFBS), 2019 FXDR 114 (FXDRS), 2019 SPORT GLIDE (FLSB)]
    - Complete
- STEERING HEAD/FORK STEM AND BRACKET ASSEMBLY
    - Prepare
    - Remove
    - Clean and Inspect
    - Install

    - Complete
- FORK LOCK
    - Prepare
    - Remove
    - Install
    - Complete
- REAR FORK
    - Prepare
    - Remove and Install
    - Disassemble and Assemble: Standard -[2019 FXDR 114 (FXDRS)]
    - Disassemble and Assemble: Cast +[2019 FXDR 114 (FXDRS)]
    - Complete
- BELT GUARDS
    - Prepare
    - Remove and Install: Standard -[2019 FXDR 114 (FXDRS)]
    - Remove and Install: Cast Rear Fork +[2019 FXDR 114 (FXDRS)]
    - Complete
- REAR SHOCK ABSORBER
    - Prepare
    - Remove
    - Install
    - Disassemble and Assemble: Rear Shock Adjuster
    - Complete
- CLUTCH CONTROL
    - Prepare
    - Remove
    - Clean and Inspect
    - Install
    - Disassemble
    - Assemble
    - Complete
- HEADLAMP NACELLE
    - Prepare
    - Remove
    - Install
    - Complete
- FAIRING
    - Remove and Install +[2019 SPORT GLIDE (FLSB)]
    - Remove and Install: Mini +[2019 FXDR 114 (FXDRS)]
    - Disassemble and Assemble +[2019 SPORT GLIDE (FLSB)]
- WINDSHIELD +[2019 HERITAGE CLASSIC (FLHC), 2019 HERITAGE CLASSIC 114 (FLHCS)]
    - Remove
    - Install
    - Disassemble
    - Assemble
- HAND GRIPS
    - Remove
    - Install
- HANDLEBAR
    - Prepare
    - Remove and Install: Standard -[2019 FXDR 114 (FXDRS)]
    - Remove and Install: Clip-on +[2019 FXDR 114 (FXDRS)]
    - Disassemble and Assemble: Standard -[2019 FXDR 114 (FXDRS)]
    - Disassemble and Assemble: Clip-on +[2019 FXDR 114 (FXDRS)]
    - Complete
- MIRRORS
    - Remove

    - Install
- FRONT FENDER
    - Remove
    - Install
    - Disassemble
    - Assemble
- REAR FENDER
    - Prepare
    - Remove and Install: Standard -[2019 FXDR 114 (FXDRS)]
    - Remove and Install: Tail Section +[2019 FXDR 114 (FXDRS)]
    - Disassemble and Assemble: Full Fender +[2019 DELUXE (FLDE), 2019 FXDR 114 (FXDRS), 2019 HERITAGE CLASSIC (FLHC), 2019 HERITAGE CLASSIC 114 (FLHCS)]
    - Disassemble and Assemble: Chopped Fender Without License Plate Bracket Lighting +[2019 BREAKOUT (FXBR), 2019 BREAKOUT 114 (FXBRS), 2019 FAT BOB (FXFB), 2019 FAT BOB 114 (FXFBS), 2019 FAT BOY (FLFB), 2019 FAT BOY 114 (FLFBS), 2019 SOFTAIL SLIM (FLSL), 2019 STREET BOB (FXBB)]
    - Disassemble and Assemble: Chopped Fender With License Plate Bracket Lighting +[2019 SPORT GLIDE (FLSB)]
    - Disassemble and Assemble: Tail Section +[2019 FXDR 114 (FXDRS)]
    - Complete
- REAR FENDER WIRE CONDUIT
    - Prepare
    - Remove
    - Install
    - Complete
- MUD GUARD +[2019 FXDR 114 (FXDRS)]
    - Remove
    - Install
- REAR LIGHTING BRACKET +[2019 FXDR 114 (FXDRS)]
    - Prepare
    - Remove
    - Install
    - Complete
- SAREE GUARD
    - Remove
    - Install
- FRONT LICENSE PLATE BRACKET
    - Remove
    - Install
- REAR LICENSE PLATE BRACKET
    - General
    - Standard +[2019 DELUXE (FLDE), 2019 HERITAGE CLASSIC (FLHC), 2019 HERITAGE CLASSIC 114 (FLHCS), 2019 LOW RIDER (FXLR)]
    - Lighting Bracket Mount +[2019 FXDR 114 (FXDRS)]
    - Center Mount +[2019 BREAKOUT (FXBR), 2019 BREAKOUT 114 (FXBRS), 2019 FAT BOB (FXFB), 2019 FAT BOB 114 (FXFBS), 2019 FAT BOY (FLFB), 2019 FAT BOY 114 (FLFBS), 2019 SOFTAIL SLIM (FLSL), 2019 STREET BOB (FXBB)]
    - Center Mount With Lighting +[2019 SPORT GLIDE (FLSB)]
- LEFT FOOT CONTROLS
    - Prepare
    - Remove
    - Install
    - Disassemble and Assemble: Footboard +[2019 DELUXE (FLDE), 2019 FAT BOY (FLFB), 2019 FAT BOY 114 (FLFBS), 2019 HERITAGE CLASSIC (FLHC), 2019 HERITAGE CLASSIC 114 (FLHCS), 2019 SOFTAIL SLIM (FLSL)]
    - Disassemble and Assemble: Footpeg +[2019 BREAKOUT (FXBR), 2019 BREAKOUT 114 (FXBRS), 2019 FAT BOB (FXFB), 2019 FAT BOB 114 (FXFBS), 2019 FXDR 114 (FXDRS), 2019 LOW RIDER (FXLR), 2019 SPORT GLIDE (FLSB), 2019 STREET BOB

(FXBB)]
        - Complete
    - RIGHT FOOT CONTROLS
        - Remove and Install: Forward Foot Controls
        - Remove and Install: Mid Foot Controls
        - Disassemble and Assemble: Footboard +[2019 DELUXE (FLDE), 2019 FAT BOY (FLFB), 2019 FAT BOY 114 (FLFBS), 2019 HERITAGE CLASSIC (FLHC), 2019 HERITAGE CLASSIC 114 (FLHCS), 2019 SOFTAIL SLIM (FLSL)]
        - Disassemble and Assemble: Footpeg +[2019 BREAKOUT (FXBR), 2019 BREAKOUT 114 (FXBRS), 2019 FAT BOB (FXFB), 2019 FAT BOB 114 (FXFBS), 2019 FXDR 114 (FXDRS), 2019 LOW RIDER (FXLR), 2019 SPORT GLIDE (FLSB), 2019 STREET BOB (FXBB)]
    - PASSENGER FOOTRESTS
        - Remove
        - Install
    - JIFFY STAND
        - Prepare
        - Remove
        - Install
        - Disassemble
        - Assemble
        - Complete
    - SEAT
        - Remove
        - Install
    - FRAME CROSSMEMBER
        - Prepare
        - Remove
        - Install
        - Complete
    - SADDLEBAGS
        - Remove and Install: Standard +[2019 HERITAGE CLASSIC (FLHC), 2019 HERITAGE CLASSIC 114 (FLHCS)]
        - Remove and Install: Quick Disconnect +[2019 SPORT GLIDE (FLSB)]
        - Disassemble and Assemble: Standard +[2019 HERITAGE CLASSIC (FLHC), 2019 HERITAGE CLASSIC 114 (FLHCS)]
        - Disassemble and Assemble: Quick Disconnect +[2019 SPORT GLIDE (FLSB)]
    - MEDALLIONS, BADGES, TANK EMBLEMS AND ADHESIVE STRIPS
        - Remove
        - Install
- Engine
    - FASTENER TORQUE VALUES
        - Fastener Torque Values in this Chapter
    - SPECIFICATIONS
        - Engine
        - SERVICE WEAR LIMITS
    - ENGINE OIL FLOW
        - Operation
    - OIL PUMP OPERATION
        - General
        - Operation
    - BREATHER OPERATION
        - General
    - OIL PRESSURE
        - Operation
        - Oil Pressure Check
    - TROUBLESHOOTING
        - Typical Symptoms

    - Compression Test
    - Cylinder Leakdown Test
    - Measure Crankshaft Runout
    - Diagnose Valve Train Noise
    - Diagnose Smoking Engine or High Oil Consumption
  - CRIMP CLAMPS
    - Remove
    - Install
  - OIL COOLER
    - Prepare
    - Remove
    - Install
    - Complete
  - OIL CHECK VALVE
    - Prepare
    - Remove
    - Install
    - Complete
  - OIL COOLANT LINES
    - Prepare
    - Remove
    - Install
    - Complete
  - FRONT ENGINE MOUNT
    - Prepare
    - Remove and Install: Lower Front Engine Mount
    - Remove and Install: Upper Front Engine Mount
    - Complete
  - LEFT SIDE ENGINE MOUNT
    - Prepare
    - Remove
    - Install
    - Complete
  - UPPER ROCKER COVERS
    - Prepare
    - Remove
    - Install
    - Complete
  - BREATHERS
    - Prepare
    - Remove
    - Install
    - Complete
  - LOWER ROCKER COVERS
    - Prepare
    - Remove
    - Install
    - Complete
  - ROCKER ARMS
    - Prepare
    - Remove
    - Clean and Inspect
    - Install
    - Complete
  - PUSHRODS, LIFTERS AND COVERS
    - Prepare
    - Remove
    - Clean and Inspect

    - Inspect Lifters
    - Assemble Pushrod Cover
    - Install
    - Complete
- CYLINDER HEADS
    - Prepare
    - Remove
    - Clean
    - Install
    - Disassemble
    - Clean and Inspect
    - Valve and Seat Repair
    - Assemble
    - Complete
- CYLINDERS
    - Prepare
    - Remove
    - Install
    - Clean and Inspect
    - Deglaze Cylinder
    - Complete
- PISTONS
    - Prepare
    - Remove
    - Install
    - Disassemble
    - Clean and Inspect
    - Check Piston Ring Gap
    - Assemble
    - Complete
- CAM COMPARTMENT AND COMPONENTS
    - Prepare
    - Remove and Install: Camshaft Cover
    - Remove
    - Inspect Cam Component
    - Install
    - Complete
    - Camshaft Needle Bearings
- Oil Pump
    - Prepare
    - Remove
    - Disassemble and Inspect
    - Assemble
    - Install
    - Complete
- REPLACE ENGINE
    - Prepare
    - Remove
    - Install
    - Complete
- CRANKCASE
    - Prepare
    - Disassemble
    - Clean and Inspect
    - Assemble
    - Repair Right Crankcase Half
    - Repair Left Crankcase Half
    - Sprocket Shaft Bearing Inner Race

        - Cylinder Studs
        - Plugs and Oil Fittings
        - Complete
    - FLYWHEEL AND CONNECTING RODS
        - Symptoms
        - Prepare
        - Inspect
        - Complete
    - OIL PAN
        - Prepare
        - Remove
        - Install
        - Complete
- Drive and Transmission
    - FASTENER TORQUE VALUES
        - Fastener Torque Values in this Chapter
    - SPECIFICATIONS
        - Drive Specifications
        - Transmission Specifications
        - SERVICE WEAR LIMITS
    - TRANSMISSION OPERATION
        - Power Flow
    - DRIVE BELT
        - Prepare
        - Remove
        - Install
        - Complete
    - SHIFTER LINKAGE
        - Shifter Rod
        - Foot Shift Lever
        - Shifter Rod Lever, Front
    - CLUTCH RELEASE COVER
        - Prepare
        - Remove
        - Install
        - Disassemble
        - Clean and Inspect
        - Assemble
        - Complete
    - PRIMARY CHAINCASE COVER
        - Prepare
        - Remove
        - Install
        - Complete
    - DRIVE COMPONENTS
        - Prepare
        - Remove
        - Install
        - Complete
    - CLUTCH
        - Prepare
        - Disassemble and Assemble: Clutch Pack
        - Disassemble and Assemble: Hub
        - Complete
    - PRIMARY CHAINCASE HOUSING
        - Prepare
        - Remove
        - Inspect

        - Install
        - Mainshaft Bearing and Seal
        - Mainshaft Bearing Inner Race
        - Shifter Shaft Bushing
        - Complete
    - ENGINE OIL FILL SPOUT
        - Prepare
        - Remove
        - Install
        - Complete
    - TRANSMISSION SPROCKET
        - Prepare
        - Remove
        - Clean and Inspect
        - Install
        - Complete
    - TRANSMISSION
        - Prepare
        - Remove
        - Install
        - Disassemble
        - Clean and Inspect
        - Assemble
        - Complete
    - MAIN DRIVE GEAR AND BEARING
        - Prepare
        - Remove
        - Clean and Inspect
        - Install
        - Replace Needle Bearings
        - Replace Mainshaft Seal
        - Complete
    - TRANSMISSION CASE
        - Prepare
        - Remove
        - Install
        - Disassemble
        - Clean and Inspect
        - Assemble
        - Complete
- Fuel and Exhaust
    - FASTENER TORQUE VALUES
        - Fastener Torque Values in this Chapter
    - SPECIFICATIONS
        - Specifications
    - AIR CLEANER BACKPLATE ASSEMBLY
        - Prepare
        - Remove and Install: Round +[2019 BREAKOUT (FXBR), 2019 DELUXE (FLDE), 2019 FAT BOB (FXFB), 2019 FAT BOY (FLFB), 2019 HERITAGE CLASSIC (FLHC), 2019 LOW RIDER (FXLR), 2019 SOFTAIL SLIM (FLSL), 2019 SPORT GLIDE (FLSB), 2019 STREET BOB (FXBB)]
        - Remove and Install: Oval +[2019 BREAKOUT 114 (FXBRS), 2019 FAT BOB 114 (FXFBS), 2019 FAT BOY 114 (FLFBS), 2019 HERITAGE CLASSIC 114 (FLHCS)]
        - Remove and Install: Square +[2019 FXDR 114 (FXDRS)]
        - Complete
    - CONSOLE
        - Prepare
        - Remove and Install: Dual Instrument

    - Remove and Install: Single Instrument with Panel
    - Remove and Install: Single Instrument without Panel
    - Complete
  - FUEL PRESSURE TEST
    - Prepare
    - Test
    - Complete
  - PURGE FUEL LINE
    - Prepare
    - Lift Rear Of Fuel Tank
    - Purge
    - Secure Fuel Tank
    - Complete
  - FUEL LINE
    - Prepare
    - Remove
    - Install
    - Complete
  - DECORATIVE FUEL CAP
    - Remove
    - Install
  - FUEL INLET TRIM +[2019 FXDR 114 (FXDRS)]
    - Remove
    - Install
  - FUEL TANK
    - Prepare
    - Remove
    - Install
    - Complete
  - FUEL PUMP
    - Prepare
    - Remove
    - Clean and Inspect
    - Install
    - Disassemble
    - Assemble
    - Complete
  - VENT TUBE
    - Prepare
    - Remove
    - Install
    - Complete
  - VAPOR VALVE
    - Prepare
    - Remove
    - Install
    - Complete
  - TEMPERATURE MANIFOLD ABSOLUTE PRESSURE (TMAP) SENSOR
    - Prepare
    - Remove
    - Install
    - Complete
  - TWIST GRIP SENSOR (TGS)
    - Prepare
    - Remove
    - Install
    - Complete
  - FUEL INJECTORS

        - Prepare
        - Remove
        - Install
        - Complete
    - INDUCTION MODULE
        - Prepare
        - Remove
        - Install
        - Disassemble
        - Assemble
        - Complete
    - INTAKE LEAK TEST
        - Leak Tester
        - Procedure
    - HEATED OXYGEN SENSORS (HO2S)
        - Prepare
        - Remove
        - Install
        - Complete
    - MUFFLERS
        - Prepare
        - Remove
        - Install
        - Complete
    - EXHAUST SYSTEM
        - Prepare
        - Remove
        - Install
        - Disassemble and Assemble: Standard +[2019 BREAKOUT (FXBR), 2019 BREAKOUT 114 (FXBRS), 2019 DELUXE (FLDE), 2019 FAT BOY (FLFB), 2019 FAT BOY 114 (FLFBS), 2019 HERITAGE CLASSIC (FLHC), 2019 HERITAGE CLASSIC 114 (FLHCS), 2019 LOW RIDER (FXLR), 2019 SOFTAIL SLIM (FLSL), 2019 STREET BOB (FXBB)]
        - Disassemble and Assemble: Upswept +[2019 FAT BOB (FXFB), 2019 FAT BOB 114 (FXFBS)]
        - Disassemble and Assemble: Two Into One +[2019 FXDR 114 (FXDRS), 2019 SPORT GLIDE (FLSB)]
        - Complete
    - PURGE SOLENOID: CALIFORNIA EMISSIONS
        - Prepare
        - Remove
        - Install
        - Complete
    - CHARCOAL CANISTER: CALIFORNIA EMISSIONS
        - Remove
        - Install
    - PURGE LINES: CALIFORNIA EMISSIONS
        - Prepare
        - Remove
        - Install
        - Complete
- Electrical
    - FASTENER TORQUE VALUES
        - Fastener Torque Values in this Chapter
    - SPECIFICATIONS
        - Specifications
    - FUSES
        - Prepare
        - Remove

    - Install
    - Complete
- POWER DISCONNECT
    - Main Fuse
    - Negative Battery Cable
- STARTER
    - Prepare
    - Remove
    - Install
    - Complete
- ALTERNATOR
    - Prepare
    - Remove
    - Install
    - Complete
- VOLTAGE REGULATOR
    - Prepare
    - Remove
    - Install
    - Complete
- SPARK PLUG CABLES
    - Remove
    - Install
- IGNITION COIL
    - Prepare
    - Remove
    - Install
    - Complete
- HANDLEBAR CONTROL MODULES
    - General
    - Solder Procedure
- LEFT HAND CONTROL MODULE (LHCM)
    - Prepare
    - Remove
    - Install
    - Switch Caps
    - Clutch Switch Replacement
    - Complete
- RIGHT HAND CONTROL MODULE (RHCM)
    - Prepare
    - Remove
    - Install
    - Switch Caps
    - Front Brake Switch Replacement
    - Complete
- INSTRUMENT MODULE (IM)
    - General
    - Prepare
    - Remove and Install: Handlebar Mount +[2019 BREAKOUT (FXBR), 2019 BREAKOUT 114 (FXBRS), 2019 STREET BOB (FXBB)]
    - Remove and Install: Light Bracket Mount +[2019 FXDR 114 (FXDRS)]
    - Remove and Install: Console With Panel +[2019 DELUXE (FLDE), 2019 FAT BOY (FLFB), 2019 FAT BOY 114 (FLFBS), 2019 HERITAGE CLASSIC (FLHC), 2019 HERITAGE CLASSIC 114 (FLHCS), 2019 SOFTAIL SLIM (FLSL), 2019 SPORT GLIDE (FLSB)]
    - Remove and Install: Console Without Panel +[2019 FAT BOB (FXFB), 2019 FAT BOB 114 (FXFBS)]
    - Remove and Install: Dual Instrument +[2019 LOW RIDER (FXLR)]
    - Complete

- TACHOMETER +[2019 LOW RIDER (FXLR)]
  - Prepare
  - Remove
  - Install
  - Complete
- INDICATOR LAMPS +[2019 DELUXE (FLDE), 2019 HERITAGE CLASSIC (FLHC), 2019 HERITAGE CLASSIC 114 (FLHCS), 2019 SOFTAIL SLIM (FLSL)]
  - Prepare
  - Remove
  - Install
  - Complete
- OIL PRESSURE SWITCH
  - Prepare
  - Remove
  - Install
  - Complete
- NEUTRAL INDICATOR SWITCH
  - Prepare
  - Remove
  - Install
  - Complete
- HORN
  - Prepare
  - Remove
  - Install
  - Disassemble
  - Assemble
  - Complete
- HEADLAMP
  - Bulb Replacement: Standard Round +[2019 DELUXE (FLDE), 2019 HERITAGE CLASSIC (FLHC), 2019 HERITAGE CLASSIC 114 (FLHCS), 2019 LOW RIDER (FXLR), 2019 SOFTAIL SLIM (FLSL), 2019 SPORT GLIDE (FLSB), 2019 STREET BOB (FXBB)]
  - Bulb Replacement: Nacelle Mounted +[2019 FAT BOY (FLFB), 2019 FAT BOY 114 (FLFBS)]
  - Bulb Replacement: Oblong +[2019 BREAKOUT (FXBR), 2019 BREAKOUT 114 (FXBRS), 2019 FXDR 114 (FXDRS)]
  - Bulb Replacement: Horizontal +[2019 FAT BOB (FXFB), 2019 FAT BOB 114 (FXFBS)]
  - Prepare
  - Remove and Install: Standard Round +[2019 DELUXE (FLDE), 2019 HERITAGE CLASSIC (FLHC), 2019 HERITAGE CLASSIC 114 (FLHCS), 2019 LOW RIDER (FXLR), 2019 SOFTAIL SLIM (FLSL), 2019 SPORT GLIDE (FLSB), 2019 STREET BOB (FXBB)]
  - Remove and Install: Nacelle Mounted +[2019 FAT BOY (FLFB), 2019 FAT BOY 114 (FLFBS)]
  - Remove and Install: Oblong +[2019 BREAKOUT (FXBR), 2019 BREAKOUT 114 (FXBRS), 2019 FXDR 114 (FXDRS)]
  - Remove and Install: Horizontal +[2019 FAT BOB (FXFB), 2019 FAT BOB 114 (FXFBS)]
  - Align
  - Adjust
  - Complete
- FRONT LIGHTING BRACKET +[2019 FXDR 114 (FXDRS)]
  - Prepare
  - Remove
  - Install
  - Complete
- FRONT LIGHT BAR +[2019 DELUXE (FLDE), 2019 HERITAGE CLASSIC (FLHC), 2019 HERITAGE CLASSIC 114 (FLHCS)]
  - Prepare
  - Remove and Install: Standard Lighting +[2019 HERITAGE CLASSIC (FLHC), 2019

HERITAGE CLASSIC 114 (FLHCS)]
    - Remove and Install: Integrated LED Lighting +[2019 DELUXE (FLDE)]
    - Complete
  - AUXILIARY LAMPS +[2019 DELUXE (FLDE), 2019 HERITAGE CLASSIC (FLHC), 2019 HERITAGE CLASSIC 114 (FLHCS)]
    - Bulb Replacement
    - Prepare
    - Remove and Install: Standard Lighting +[2019 HERITAGE CLASSIC (FLHC), 2019 HERITAGE CLASSIC 114 (FLHCS)]
    - Remove and Install: Integrated LED Lighting +[2019 DELUXE (FLDE)]
    - Align
    - Adjust
    - Complete
  - FRONT TURN SIGNAL LAMPS
    - Bulb Replacement
    - Prepare
    - Remove and Install: Handlebar Mount +[2019 BREAKOUT (FXBR), 2019 BREAKOUT 114 (FXBRS), 2019 FAT BOB (FXFB), 2019 FAT BOB 114 (FXFBS), 2019 FAT BOY (FLFB), 2019 FAT BOY 114 (FLFBS), 2019 FXDR 114 (FXDRS), 2019 LOW RIDER (FXLR), 2019 SOFTAIL SLIM (FLSL), 2019 SPORT GLIDE (FLSB), 2019 STREET BOB (FXBB)]
    - Remove and Install: Front Lighting Bracket Mount +[2019 FXDR 114 (FXDRS)]
    - Remove and Install: Light Bar Mount +[2019 DELUXE (FLDE), 2019 HERITAGE CLASSIC (FLHC), 2019 HERITAGE CLASSIC 114 (FLHCS)]
    - Complete
  - REAR TURN SIGNAL LAMPS
    - Bulb Replacement
    - Prepare
    - Remove and Install: Fender Mount +[2019 BREAKOUT (FXBR), 2019 BREAKOUT 114 (FXBRS), 2019 FAT BOB (FXFB), 2019 FAT BOB 114 (FXFBS), 2019 FAT BOY (FLFB), 2019 FAT BOY 114 (FLFBS), 2019 LOW RIDER (FXLR), 2019 SOFTAIL SLIM (FLSL), 2019 STREET BOB (FXBB)]
    - Remove and Install: Rear Lighting Assembly +[2019 FXDR 114 (FXDRS)]
    - Remove and Install: Light Bar Mount +[2019 DELUXE (FLDE), 2019 FXDR 114 (FXDRS), 2019 HERITAGE CLASSIC (FLHC), 2019 HERITAGE CLASSIC 114 (FLHCS)]
    - Remove and Install: Center Mount +[2019 SPORT GLIDE (FLSB)]
    - Complete
  - TAIL LAMP
    - Bulb Replacement
    - Prepare
    - Remove and Install: Rear Lighting Assembly +[2019 FXDR 114 (FXDRS)]
    - Remove and Install: Standard +[2019 HERITAGE CLASSIC (FLHC), 2019 HERITAGE CLASSIC 114 (FLHCS), 2019 LOW RIDER (FXLR)]
    - Remove and Install: Tombstone +[2019 DELUXE (FLDE)]
    - Remove and Install: License Plate Bracket Mount +[2019 FAT BOB (FXFB), 2019 FAT BOB 114 (FXFBS)]
    - Remove and Install: Center Mount +[2019 BREAKOUT (FXBR), 2019 BREAKOUT 114 (FXBRS), 2019 FAT BOY (FLFB), 2019 FAT BOY 114 (FLFBS), 2019 SOFTAIL SLIM (FLSL), 2019 SPORT GLIDE (FLSB), 2019 STREET BOB (FXBB)]
    - Complete
  - REAR STOPLAMP SWITCH
    - Prepare
    - Remove
    - Install
    - Complete
  - LICENSE PLATE LAMP
    - Bulb Replacement
    - Prepare
    - Remove and Install: Center Mount +[2019 BREAKOUT (FXBR), 2019 BREAKOUT 114

(FXBRS), 2019 FAT BOY (FLFB), 2019 FAT BOY 114 (FLFBS), 2019 SOFTAIL SLIM (FLSL), 2019 STREET BOB (FXBB)]
    - Remove and Install: License Plate Bracket Mount +[2019 FAT BOB (FXFB), 2019 FAT BOB 114 (FXFBS)]
    - Remove and Install: Side Mount +[2019 BREAKOUT (FXBR), 2019 BREAKOUT 114 (FXBRS), 2019 FAT BOB (FXFB), 2019 FAT BOB 114 (FXFBS), 2019 FAT BOY (FLFB), 2019 FAT BOY 114 (FLFBS), 2019 SOFTAIL SLIM (FLSL), 2019 STREET BOB (FXBB)]
    - Complete
- TERMINATING RESISTOR
    - Prepare
    - Remove
    - Install
    - Complete
- ELECTRONIC CONTROL MODULE (ECM)
    - Prepare
    - Remove
    - Install
    - Complete
- BODY CONTROL MODULE (BCM)
    - Prepare
    - Remove
    - Install
    - Complete
- SECURITY SYSTEM ACTIVATION
    - Activation
    - Fob Assignment
- PERSONAL IDENTIFICATION NUMBER (PIN)
    - General
    - Changing the PIN
- SECURITY SYSTEM MAINTENANCE
    - Service Mode
    - Transport Mode
    - Fob Battery
    - Security Siren Battery
- SECURITY SIREN
    - Prepare
    - Remove
    - Install
    - Complete
- SECURITY SYSTEM ANTENNA
    - Prepare
    - Remove
    - Install
    - Complete
- CRANKSHAFT POSITION SENSOR (CKP)
    - Prepare
    - Remove
    - Install
    - Complete
- ENGINE TEMPERATURE (ET) SENSOR
    - Prepare
    - Remove
    - Install
    - Complete
- KNOCK SENSOR (KS)
    - Prepare
    - Remove
    - Install

    - Complete
- AUTOMATIC COMPRESSION RELEASE (ACR)
    - Prepare
    - Remove
    - Install
    - Complete
- VEHICLE SPEED SENSOR (VSS)
    - Prepare
    - Remove
    - Install
    - Complete
- FRONT WHEEL SPEED SENSOR (WSS)
    - Prepare
    - Remove
    - Install
    - Complete
- REAR WHEEL SPEED SENSOR (WSS)
    - Prepare
    - Remove and Install: Standard Fork -[2019 FXDR 114 (FXDRS)]
    - Remove and Install: Cast Fork +[2019 FXDR 114 (FXDRS)]
    - Complete
- JIFFY STAND SENSOR (JSS)
    - Prepare
    - Remove
    - Install
    - Complete
- FRONT ELECTRICAL CADDY
    - Prepare
    - Remove
    - Install
    - Complete
- USB CADDY
    - Prepare
    - Remove
    - Install
    - Disassemble
    - Assemble
    - Complete
- ECM CADDY
    - Prepare
    - Remove
    - Install
    - Complete
- BCM CADDY
    - Prepare
    - Remove
    - Install
    - Complete
- REAR LIGHTING CADDY
    - Prepare
    - Remove
    - Install
    - Complete
- BATTERY TRAY
    - Prepare
    - Remove
    - Install
    - Complete

- ENGINE GROUND CABLE
  - Prepare
  - Remove
  - Install
  - Complete
- ENGINE WIRE HARNESS
  - Prepare
  - Remove
  - Install
  - Complete
- BACKBONE WIRE HARNESS
  - Prepare
  - Remove
  - Install
  - Complete
- MAIN WIRE HARNESS
  - Prepare
  - Remove
  - Install
  - Disassemble
  - Assemble
  - Complete

- Wiring
  - WIRING DIAGRAMS
    - General
    - Wiring Diagrams
  - WIRE HARNESS CONNECTORS
    - General
    - Connector End Views
- Reference
  - GLOSSARY
    - Acronyms and Abbreviations
  - METRIC CONVERSION
    - Conversion Table
  - FLUID CONVERSION
    - United States System
    - Metric System
    - British Imperial System
- Backmatter
  - Backmatter
    - Backmatter
    - Backmatter

This manual has been created to inform Harley-Davidson technicians about the construction of Harley-Davidson products and the latest tested and approved maintenance and repair techniques.

Safety

Refer to the Safety section before performing any procedures on a vehicle.

Sections

This service manual is organized into chapters, sections and topics. Each section is laid out in the following manner:

- Prepare
- Remove
- Install
- Disassemble (if applicable)
- Clean/Inspect (if applicable)
- Assemble (if applicable)
- Complete

Topics

The purpose of the **Prepare** topics is to to provide an outline of procedures required before beginning a specific task. Links to the necessary procedures are provided in the topic.

The **Remove** and **Install** topics allow the technician to only remove and install the component - which may be all that is required. If a component can be repaired, **Disassemble**, **Assemble** and **Clean/Inspect** topics are provided as appropriate.

Complete topics provide a list of procedures that need to be performed to return the vehicle to ride-ready condition. If additional removal procedures need to be performed, move to the next section without performing the Complete topics in the current section.

Procedural Steps

Each topic contains steps to complete the procedure. These steps are laid out in numeric and alpha steps.

The purpose of the numeric steps is to provide the experienced technician with high-level information to complete the procedure.

The alpha steps provide a less-experienced technician with step-by-step instructions to perform the procedure.

Symbol Identification

Symbols are used in some graphics to provide information about parts. Refer to Table 1 for symbol definitions.

Table 1. Symbols

SYMBOL	DESCRIPTION
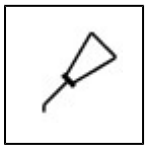	**Apply Lubricant:** Indicates a part that should be lubricated during installation.
	Discard/Do Not Reuse: Indicates a part that must be replaced with a **new** part during installation.

	Apply Sealant: Indicates a part that must be installed with a threadlocker or sealant.
	Special Tool: Indicates that a special tool is recommended.
	Measure: Indicates a part that should be measured or gauged to verify that it is within specification.

Cross-References and Page Numbers

A cross-reference shown as **2.2 SPECIFICATIONS** refers to chapter 2 CHASSIS, heading 2.2 SPECIFICATIONS.

All pages contain a chapter number followed by a page number. For example, **page 3-5** refers to page 5 in Chapter 3.

Item References and Quantities

In figure legends and tables, the number in parentheses that follows the part name indicates the quantity of that part necessary for one complete assembly.

Example:

2. Rocker cover screw (4)

In a procedure step or paragraph, the number in parentheses that follows a part name indicates the legend item of the part in the figure referenced by the text.

Example:

1. Remove rocker cover screws (2).

Acronyms and Abbreviations

Acronyms and abbreviations are used in this document. See the **Reference → GLOSSARY → Acronyms and Abbreviations** for a list of acronyms, abbreviations and definitions.

- Start each job with a clean work area.
- Clean the motorcycle before work begins.
- Gather any tools, instruments and parts needed for the job before work begins.
- Carefully read all related service information, including service bulletins, before service work begins.

WARNING

Harley-Davidson parts and accessories are designed for Harley-Davidson motorcycles. Using non-Harley-Davidson parts or accessories can adversely affect performance, stability or handling, which could result in death or serious injury. (00001b)

To achieve satisfactory and lasting repairs, carefully follow the service manual instructions and use **only** genuine Harley-Davidson replacement parts.

Removing Parts

Always use blocking or proper stands to support the part that has been hoisted. If a part cannot be removed, verify that all bolts and attaching hardware have been removed. Verify that no parts are in the way of the part being removed.

Always tag hoses, wiring or tubes to verify proper installation.

Cleaning

Thoroughly clean all parts to be reused before assembly. Clean parts promote better component operation and longer life. Seals, filters and covers used in this vehicle keep out extraneous dirt and dust. Keep these items in good condition to guarantee satisfactory operation. See **Foreword → Foreword → Cleaning**.

Checking Torques on Fasteners and Threadlocking Agents

Check torque using a torque wrench set to the minimum specification for that fastener. If the fastener does not rotate, the torque has been maintained. If the fastener rotates, remove it to determine if it has a threadlocking agent.

If it has a threadlocking agent, clean all material from the threaded hole. Replace the fastener with a **new** one or clean the original fastener threads and apply the appropriate threadlocking product. Install and tighten the fastener to specification.

If the fastener does not use a threadlocking agent, install and tighten it to specification.

General

Any cleaning method may be used as long as it does not result in parts damage. Thorough cleaning is necessary for proper parts inspection. Strip rusted paint areas to bare metal before priming and repainting.

Always clean around lines or covers before they are removed. When cleaning parts:

- Plug, tape or cap holes and openings to keep out dirt, dust and debris.
- Clean and inspect all parts as they are removed.
- Cover all clean parts with clean lint-free cloth, paper or other material.
- Verify that the part is clean when installed.

Cleaning Threads and Threaded Holes

Always verify cleanliness of blind holes before assembly. Tightening a screw with dirt, water or oil in the hole can cause castings to crack or break.

To attain proper clamp load, always clean fastener threads and threaded holes prior to assembly.

NOTE

Never use a thread-cutting tap or die to clean threads.

- Clean all threadlocking material from fastener threads and threaded holes.
- Use a wire brush or thread-chasing die to clean fastener threads.
- Use a thread chaser to clean threaded holes.
- Use PJ1 cleaner or equivalent to remove all traces of oil and contaminants from threads.
- Clear all threaded holes with low-pressure compressed air.

Cleaning Plastic and Rubber Parts

Never use cleaners containing chlorine or ammonia on plastic parts. Chlorine will cause parts to become distorted and brittle resulting in cracks. Ammonia will cause cloudiness and brittleness in windshields and cause non-painted parts to form a white haze.

Before cleaning, protect rubber parts (such as hoses, boots and electrical insulation) from cleaning solutions. Use a grease-proof barrier material. Remove the rubber part if it cannot be properly protected.

Rust or Corrosion Removal

Remove rust and corrosion with a wire brush, abrasive cloth, sand blasting, vapor blasting or rust remover. Use buffing crocus cloth on highly polished parts that are rusted.

Bearings

Wash bearings in a non-flammable petroleum cleaning solution. Never use a solution that contains chlorine. Knock out packed lubricant by tapping the bearing against a wooden block. Wash bearings again.

WARNING

Using compressed air to "spin dry" bearings can cause bearing to fly apart, which could result in death or serious injury. (00505b)

Cover bearings with a clean shop towel. Allow bearings to air dry. Do not spin bearings while they are drying. Never use

compressed air to dry bearings.

When dry, coat bearings with clean oil. Wrap bearings in clean paper.

Many communities maintain facilities for recycling used fluids, plastics and metals. Dispose of or recycle used oil, lubricants, fuel, coolant, brake fluid and batteries in accordance with local regulations.

WARNING

Read and follow warnings and directions on all products. Failure to follow warnings and directions can result in death or serious injury. (00470b)

Some service procedures require the use of tools designed for a specific purpose. These tools should be used when and as recommended.

When reference is made in this manual to a brand name product, tool or instrument, an equivalent product, tool or instrument may be substituted.

Special Tools

Special tools mentioned in this manual with a part number that begins with an "HD", "J" or "B" must be purchased, serviced or warrantied through a Harley-Davidson dealer.

Specific use of special tools is not discussed in this manual. Refer to the tool instruction sheet for instructions. If the tool instructions are misplaced, a copy can be obtained online at H-Dnet.com > My Toolbox > Edit > Bosch Tool Site.

LOCTITE Sealing and Threadlocking Products

Some procedures in this manual call for the use of LOCTITE products. If you have any questions regarding LOCTITE product usage or retailer/wholesaler locations, contact Loctite Corp. at www.loctite.com.

Apple, Alcantara S.p.A., Allen, Amp Multilock, Bluetooth, Brembo, CarPlay, City Navigator, Delphi, Deutsch, Dunlop, Dynojet, Fluke, G.E. Versilube, Garmin, Gunk, Hydroseal, Hylomar, iPhone, iPod, Kevlar, Lexan, Loctite, Lubriplate, Keps, K&N, Magnaflux, Marson Thread-Setter Tool Kit, MAXI fuse, Molex, Michelin, MPZ, Mulitilock, nano, NGK, Novus, Packard, Pirelli, Permatex, Philips, PJ1, Pozidriv, Road Tech, Robinair, S100, Sems, Siri, SiriusXM, Snap-on, Teflon, Threadlocker, Torca, Torco, TORX, Tufoil, Tyco, Ultratorch, Velcro, X-Acto and XM Satellite Radio are among the trademarks of their respective owners.

Bar & Shield, Boom!, Cross Bones, Cruise Drive, CVO, Digital Tech, Digital Technician, Digital Technician II, Dyna, Electra Glide, Evolution, Fat Bob, Fat Boy, Forty-Eight, Glaze, Gloss, H-D, H-Dnet.com, Harley, Harley-Davidson, HD, Heritage Softail, Iron 883, Low Rider, Milwaukee-Eight, Night Rod, Nightster, Night Train, Profile, Reflex, Revolution, Road Glide, Road King, Road Tech, Rocker, Screamin' Eagle, Seventy-Two, Softail, Sportster, Street Glide, Street Rod, Sun Ray, Sunwash, Super Glide, SuperLow, Supersmart, Switchback, SYN3, TechLink, TechLink II, Tour-Pak, Tri Glide, Twin Cam 88, Twin Cam 88B, Twin Cam 96, Twin Cam 96B, Twin Cam 103, Twin Cam 103B, Twin Cam 110, Twin Cam 110B, Twin-Cooled, Ultra Classic, V-Rod, VRSC and Harley-Davidson Genuine Motor Parts and Genuine Motor Accessories are among the trademarks of H-D U.S.A., LLC.

All photographs, illustrations and procedures may not necessarily depict the most current model or component, but are based on the latest production information available at the time of publication.

Since product improvement is our continual goal, Harley-Davidson reserves the right to change specifications, equipment or designs at any time without notice and without incurring obligation.

Harley-Davidson service manuals are intended for use by professional, qualified and experienced technicians. Attempting the procedures found within this manual without the proper training, tools and equipment could result in death or injury to you or others. This could also damage the vehicle, or cause the vehicle to operate improperly.

Safety is always the most important consideration when performing any job.

- Always have a complete understanding of the task.
- Use common sense.
- Use proper tools for the task.
- Protect yourself and bystanders with approved eye protection.

Harley-Davidson does not evaluate or advise the technicians of every way in which service might be performed, or all possible hazardous consequences of every method, or undertaken such a broad evaluation. Before using a tool not recommended by Harley-Davidson, make sure that technician or rider safety will not be jeopardized as a result.

Warnings against the use of specific service methods which could damage the motorcycle or render it unsafe are stated in this manual. **These warnings are not all-inclusive.** Inadequate safety precautions could result in death or serious injury.

Safety Messages

Statements in this manual preceded by the following words are of special significance.

WARNING

WARNING indicates a potentially hazardous situation which, if not avoided, could result in death or serious injury. (00119a)

CAUTION

CAUTION indicates a potentially hazardous situation which, if not avoided, may result in minor or moderate injury. (00139a)

NOTICE

NOTICE indicates a potentially hazardous situation which, if not avoided, may result in property damage. (00140b)

NOTE

Refers to important information. It is recommended that you take special notice of these items.

Customer Safety

WARNING

The rider's safety depends upon proper motorcycle service and maintenance. If a procedure in this manual is not within your capabilities or you do not have the correct tools, have a Harley-Davidson dealer perform the procedure. Improper service or maintenance could result in death or serious injury. (00627b)

Proper service and repair is important for the safe, reliable operation of all mechanical products. The service procedures recommended and described in this manual are effective methods for performing service operations and are essential to your customer's safety and the reliable and safe operation of your customer's vehicle.

Personal Protection

WARNING

- Always wear safety glasses or goggles when performing service or maintenance procedures. Flying objects or materials can cause serious eye injury or death.
- Wear protective gear that is appropriate to the situation. Helmets, gloves, boots and other protective clothing can prevent serious injury or death.
- Wear ear protection when loud noises are present. Loud noises can damage ears and cause hearing loss.

(00628b)

Tool Safety

Some of these service operations require the use of tools specially designed for the purpose. Follow the manufacturer's suggested usage and safety instructions. If using a tool other than that recommended by Harley-Davidson, be sure that the tool is appropriate for the service or maintenance procedure and is being used in accordance with the tool's safety instructions.

Product Safety

WARNING

Read and follow warnings and directions on all products. Failure to follow warnings and directions can result in death or serious injury. (00470b)

- When reference is made to a specific brand name product, tool or instrument, an equivalent product, tool or instrument may be substituted.
- Some referenced or recommended products contain chemicals known to the State of California to cause cancer and birth defects or other reproductive harm as indicated on the product label or at the point of purchase.

Hazardous Materials

WARNING

Read and follow warnings and directions on all products. Failure to follow warnings and directions can result in death or serious injury. (00470b)

- Keep hazardous products out of the reach of children.
- Many products (oils, lubricants, solvents, sealants and cleaners, etc.) can cause death or serious injury if inhaled, absorbed, injected, ingested or improperly contacted. If hazardous contact is made with a product, follow the instructions on the product label and, if necessary, contact poison control or a medical facility.
- Some products are flammable and/or explosive as indicated on the product label or at the point of purchase. Keep these products away from flame and intense heat.
- Some products are corrosive as indicated on the product label. Wear appropriate protective gear to prevent skin contact. Use service covers to prevent damage to cosmetic surfaces on the motorcycle.
- Some products contain chemicals known to the State of California to cause cancer and birth defects or other reproductive harm as indicated on the product label or at the point of purchase.

Fuel

WARNING

Keep gasoline away from ignition sources. Gasoline is extremely flammable and highly explosive and, if ignited, could result in

death or serious injury. (00634b)

- Stop the engine when refueling or servicing the fuel system.
- Do not allow open flame, sparks, radiant heat or other ignition sources near gasoline.
- Do not store motorcycle with gasoline in tank within the home or garage where ignition sources, such as open flames, pilot lights, sparks or electric motors are present.
- Do not overfill fuel tank. Allow for fuel expansion .
- Do not use gasoline as a cleaner or solvent.
- Gasoline can leak or drain from loosened or improperly tightened fuel fittings or from removed fuel components.
- Clean spilled gasoline immediately. Dispose of waste materials properly.

Battery

WARNING

Read and follow warnings and directions on all products. Failure to follow warnings and directions can result in death or serious injury. (00470b)

- Batteries contain sulfuric acid, which could cause severe burns to eyes and skin. Wear a protective face shield, rubberized gloves and protective clothing when working with batteries. Keep batteries out of the reach of children.
- Do not remove warning label attached to top of battery.
- Batteries, battery posts, terminals and related accessories contain lead and lead compounds, and other chemicals known to the State of California to cause cancer, and birth defects or other reproductive harm. Wash hands after handling.

Coolant

- Coolant contains toxic chemicals which could cause death or serious injuries if ingested. Do not induce vomiting. Call a physician immediately.
- Irritation to skin or eyes can occur from vapors or direct contact. Flush thoroughly with water if contact is made.
- Use in a well ventilated area.

Hydraulic (Brake) Fluid

- Direct contact with brake fluid to the eyes can cause irritation. Flush thoroughly with water if contact is made.
- Do not swallow brake fluid. Swallowing brake fluid can cause digestive discomfort. Call a physician immediately.
- Brake fluid will cause cosmetic damage to painted surfaces. Always use caution and protect surfaces from spills whenever brake work is performed.

Engine Oil

- Prolonged or repeated contact with used motor oil may be harmful to skin and could cause skin cancer. Promptly wash affected areas with soap and water.
- Do not swallow oil. If swallowed, do not induce vomiting. Contact a physician immediately.
- Direct contact with eyes can cause irritation. Flush thoroughly with water if contact is made. Contact a physician if irritation persists.

Electrical Systems

WARNING

Improper service or maintenance of the electrical system can cause damage to the electrical system. This may result in component failure. In certain situations, a component failure during operation could lead to a loss of control, which could result in death or serious injury. (00637b)

- Always use replacement fuses that are of the specified type and amperage rating.
- Do NOT pull on electrical wires. Pulling on electrical wires may damage wire conductivity.
- Route wires and harnesses properly to prevent chafing, stripping, pinching, crimping or cutting wires. Damaged wires can cause short circuits and component damage or failure.
- Do NOT overload the vehicle's charging system. If the electrical accessories consume more electrical current than the charging system can produce, the battery may be discharged and cause damage to the motorcycle's electrical system.

Do NOT exceed the maximum amperage rating of the fuse or circuit breaker protecting a modified circuit.

- Avoid directly heating electrical system components other than the connectors on which heat shrink work is being performed.

FASTENER	TORQUE VALUE	NOTES
Air filter cover screw, single screw cover	5.6–7.3 N·m (50–65 **in-lbs**)	2.20 INSPECT AIR FILTER, Remove and Install: Round *Apply LOCTITE 243 (blue) to the threads of screw.*
Air filter cover screw, square	5.4–8.1 N·m (48–72 **in-lbs**)	2.20 INSPECT AIR FILTER, Remove and Install: Square
Air filter cover screws, five-screw cover	5.4–8.1 N·m (48–72 **in-lbs**)	2.20 INSPECT AIR FILTER, Remove and Install: Round *Apply LOCTITE 243 (blue) to the threads of screw. Tighten in a star pattern.*
Air filter cover screws, oval cover	5.7–6.8 N·m (50–60 **in-lbs**)	2.20 INSPECT AIR FILTER, Remove and Install: Oval
Air filter element screw, square	5.4–8.1 N·m (48–72 **in-lbs**)	2.20 INSPECT AIR FILTER, Remove and Install: Square
Air filter element screws, round cover	5.4–8.1 N·m (48–72 **in-lbs**)	2.20 INSPECT AIR FILTER, Remove and Install: Round
Air filter trim insert screws	3–3.6 N·m (27–32 **in-lbs**)	2.20 INSPECT AIR FILTER, Remove and Install: Oval
Axle nut, rear, FXDRS	149.1–162.7 N·m (110–120 ft-lbs)	2.17 INSPECT AND ADJUST DRIVE BELT AND SPROCKETS, Adjust Belt
Axle nut, rear, all but FXDRS	128.8–142.4 N·m (95–105 ft-lbs)	2.17 INSPECT AND ADJUST DRIVE BELT AND SPROCKETS, Adjust Belt
Battery, positive cable, screw	8.1–10.8 N·m (72–96 **in-lbs**)	2.21 INSPECT BATTERY, Install
Brake master cylinder, front, reservoir cover screws	1–1.2 N·m (9–11 **in-lbs**)	2.11 CHECK AND REPLACE BRAKE FLUID, Check Brake Fluid Level
Brake master cylinder, rear, reservoir cover screws	1–2 N·m (9–18 **in-lbs**)	2.11 CHECK AND REPLACE BRAKE FLUID, Check Brake Fluid Level
Clutch hub jamnut	8.1–13.6 N·m (72–120 **in-lbs**)	2.12 CHECK AND ADJUST CLUTCH, Check and Adjust
Clutch inspection cover screws	2.8–3.9 N·m (25–35 **in-lbs**)	2.6 REPLACE PRIMARY CHAINCASE LUBRICANT, Change Primary Chaincase Lubricant *Torque sequence*
Drive belt first pre-load - FXDRS	33.9 N·m (25 ft-lbs)	2.17 INSPECT AND ADJUST DRIVE BELT AND SPROCKETS, Adjust Belt
Engine oil drain plug	19–28.5 N·m (14–21 ft-lbs)	2.5 REPLACE ENGINE OIL AND FILTER, Change Oil and Oil Filter
Fork stem pinch bolt - FXDRS	38–43.4 N·m (28–32 ft-lbs)	2.14 ADJUST AND LUBRICATE STEERING HEAD BEARINGS, Check

		and Adjust
Fork stem pinch bolt - All but FXDRS	21.7–27.1 N·m (16–20 ft-lbs)	2.14 ADJUST AND LUBRICATE STEERING HEAD BEARINGS, Check and Adjust
Front brake pad hanger pin	14.7–19.6 N·m (11–14 ft-lbs)	2.10 INSPECT BRAKES, Replace Front Brake Pads
Lower fork bracket pinch bolt	21.7–27.1 N·m (16–20 ft-lbs)	2.14 ADJUST AND LUBRICATE STEERING HEAD BEARINGS, Check and Adjust
New - drive belt final pre-load - FXDRS	10.8–14.9 N·m (96–132 **in-lbs**)	2.17 INSPECT AND ADJUST DRIVE BELT AND SPROCKETS, Adjust Belt
Primary chaincase drain plug	19–28.5 N·m (14–21 ft-lbs)	2.6 REPLACE PRIMARY CHAINCASE LUBRICANT, Change Primary Chaincase Lubricant
Service - drive belt final pre-load - FXDRS	4.5–5.6 N·m (40–50 **in-lbs**)	2.17 INSPECT AND ADJUST DRIVE BELT AND SPROCKETS, Adjust Belt
Spark plug	10–15 N·m (89–133 **in-lbs**)	2.22 CLEAN AND INSPECT SPARK PLUGS, Install
Spoke nipple	6.2 N·m (55 **in-lbs**)	2.8 INSPECT TIRES AND WHEELS, Wheel Spokes
Transmission drain plug	19–28.5 N·m (14–21 ft-lbs)	2.7 REPLACE TRANSMISSION LUBRICANT, Change Transmission Lubricant
Transmission filler plug/dipstick	2.8–8.5 N·m (25–75 **in-lbs**)	2.7 REPLACE TRANSMISSION LUBRICANT, Check Transmission Lubricant
Transmission filler plug/dipstick	2.8–8.5 N·m (25–75 **in-lbs**)	2.7 REPLACE TRANSMISSION LUBRICANT, Change Transmission Lubricant

WARNING

Perform the service and maintenance operations as indicated in the regular service interval table. Lack of regular maintenance at the recommended intervals can affect the safe operation of your motorcycle, which could result in death or serious injury. (00010a)

Perform necessary set-up tasks before customer delivery. See applicable model year predelivery and set-up instructions.

The performance of new motorcycle initial service is required to keep warranty in force and to verify proper emissions systems operation. See **Maintenance → MAINTENANCE SCHEDULE**.

Inspect motorcycle regularly for additional maintenance needs. Routinely check components between regular maintenance intervals. Always inspect motorcycle after periods of storage before riding.

Perform all of the checks in the PRE-RIDING CHECKLIST in the owner's manual following any service procedure. Operate the motorcycle to perform any final check or adjustments. If all is correct, the vehicle is ready to return to the customer.

Special Tools

Description	Part Number	Qty.
FAT JACK	HD-45968	1

WARNING

Be sure to check capacity rating and condition of hoists, slings, chains and cables before use. Exceeding capacity ratings or using lifting devices that are in poor condition can lead to an accident, which could result in death or serious injury. (00466c)

Always use blocking or proper stands to support motorcycle.

Set Motorcycle Upright

1. Place motorcycle upright on a level surface or suitable lift if available.
2. Verify that motorcycle is level.
3. Secure with tie-downs.

Raise Front or Rear Wheel for Service

1. Verify that motorcycle is level.
2. Use a **FAT JACK (Part Number:HD-45968)** or similar to raise the motorcycle to service a front or rear wheel.
3. Secure with tie-downs.

Regular Service Intervals

Service must be performed at specified intervals to keep your Harley-Davidson motorcycle operating at peak performance. Refer to Table 1.

NOTE

- The use of parts and service procedures other than Harley-Davidson approved parts and service procedures may void the limited warranty. Any alterations to the emission system components, such as the intake and exhaust system, may be in violation of motor vehicle laws.
- Some countries, such as Brazil, may require all regular maintenance to be performed by an authorized Harley-Davidson dealer for your limited warranty to remain in effect. Check with your authorized Harley-Davidson dealer.
- Some countries, such as Brazil, may require additional annual (or semi-annual) regular maintenance steps to be performed to keep your limited warranty in effect and/or comply with vehicle regulations. Check with your authorized Harley-Davidson dealer as well as the motorcycle regulations in your country.
- After completing the final service interval, repeat the service schedule starting at the 8000 km (5000 mi) interval.
- Whenever a vehicle is in for maintenance, always check for and complete recalls and open product programs.
- Whenever a vehicle is in for maintenance, always verify that the latest calibration is installed.

Table 1. Regular Service Intervals: Harley-Davidson Softail Models

ITEM SERVICED	1000 MI 1600 KM	5000 MI 8000 KM	10000 MI 16000 KM	15000 MI 24000 KM	20000 MI 32000 KM	25000 MI 40000 KM	30000 MI 48000 KM	35000 MI 56000 KM	40000 MI 64000 KM	45000 MI 72000 KM	50000 MI 80000 KM	NOTES
Check operation of electrical equipment and switches	X	X	X	X	X	X	X	X	X	X	X	
Check front tire pressure, inspect tread	X	X	X	X	X	X	X	X	X	X	X	1
Check front wheel spoke torque (if equipped)	X	X			X			X			X	2, 3, 4
Inspect front brake fluid level	X	X	X	X	X	X	X	X	X	X	X	
Check DOT4 front brake fluid for moisture	X	X	X	X	X	X	X	X	X	X	X	1, 2
Adjust steering head bearings	X		X		X		X		X		X	2

Lubricate steering head bearings							X					2, 6
Inspect windshield bushings (if applicable)			X		X		X		X		X	
Check upper and lower switch housing screw torque	X		X		X		X		X		X	1, 2, 5
Check clutch lever handlebar clamp screw torque	X		X		X		X		X		X	1, 2, 5
Check master cylinder handlebar clamp screw torque	X		X		X		X		X		X	1, 2, 5
Inspect air cleaner, service as required		X	X	X	X	X	X	X	X	X	X	4
Replace engine oil and filter	X	X	X	X	X	X	X	X	X	X	X	1, 4
Clean and inspect oil cooler	X	X	X	X	X	X	X	X	X	X	X	
Replace primary chaincase lubricant	X		X		X		X		X		X	4
Replace transmission lubricant	X				X				X			4
Inspect oil lines and brake system for leaks, contact, or abrasion	X	X	X	X	X	X	X	X	X	X	X	1, 2
Inspect fuel lines and fittings for	X	X	X	X	X	X	X	X	X	X	X	1, 2

leaks, contact or abrasion												
Inspect rear brake fluid level	X	X	X	X	X	X	X	X	X	X	X	
Check DOT 4 rear brake fluid for moisture	X	X	X	X	X	X	X	X	X	X	X	1, 2
Inspect brake pads and discs for wear	X	X	X	X	X	X	X	X	X	X	X	
Check front axle torque	X		X		X		X		X		X	1, 2, 5
Inspect and lubricate jiffy stand	X	X	X	X	X	X	X	X	X	X	X	2, 4
Check clutch adjustment	X	X	X	X	X	X	X	X	X	X	X	2, 4
Check, adjust and lubricate brake and clutch controls	X	X	X	X	X	X	X	X	X	X	X	
Check rear wheel spoke torque (if equipped)	X	X			X			X			X	2, 3, 4
Check rear tire pressure, inspect tread	X	X	X	X	X	X	X	X	X	X	X	1
Check rear fork spacer bolt torque	X		X		X		X		X		X	1,2,5
Inspect drive belt and sprockets, adjust belt	X	X	X	X	X	X	X	X	X	X	X	2
Check rear axle nut torque	X		X		X		X		X		X	1, 2, 5
Inspect exhaust system for leaks, cracks, and loose or	X	X	X	X	X	X	X	X	X	X	X	1, 4

missing fasteners or exhaust shields												
Battery	Check battery, terminal torque and clean connections annually.											1
Spark plugs	Replace spark plugs every two years or every 48,000 km (30000 mi), whichever comes first.											
Front forks	Disassemble, inspect, rebuild front forks and replace fork oil every 80,000 km (50000 mi).											2
Fuel filter	Replace fuel filter every 161,000 km (100000 mi).											2, 4
Brake system	Flush brake and clutch systems and replace DOT 4 hydraulic brake and clutch fluids every two years or sooner if moisture content is 3% or greater											2
Road test to verify component and system functions	X	X	X	X	X	X	X	X	X	X	X	
NOTES:	1. Perform annually or at specified intervals, whichever comes first. 2. Should be performed by an authorized Harley-Davidson dealer, unless you have the proper tools, service data and are mechanically qualified. 3. Perform spoke tension check at the 2,000 km (1000 mi), 8,000 km (5000 mi), 32,000 km (20000 mi) services and every 24,000 km (15000 mi) interval thereafter. Not all vehicles are equipped with spoke wheels. Consult appropriate topic in service manual. 4. Perform maintenance more frequently in severe riding conditions (such as extreme temperatures, dusty environments, mountainous or rough roads, long storage conditions, short runs, heavy stop/go traffic or poor fuel quality). 5. For torque instructions, see Shop Practices in the service manual. 6. Disassemble, lubricate and inspect every 48,000 km (30000 mi).											

Maintenance Records

Maintain a record of this service to keep your new motorcycle limited warranty in force. Refer to Table 2.

Table 2. Lubricants, Greases, Sealants

ITEM	PART NUMBER	PACKAGE
3M 847 Adhesive	021200-19718 *	5 oz tube
3M General Purpose Adhesive Remover		15 oz aerosol
Anti-Seize Lubricant	98960-97	1 oz squeeze tube
CCI #20 Brake Grease	42830-05	squeeze packet
DOT 4 Brake Fluid	99953-99A	12 oz bottle
Dow Corning Moly 44 Grease	94674-99	2 cc packet
Electrical Contact Lubricant	11300004	1 oz squeeze tube

Formula+ Transmission and Primary Chaincase Lubricant	99851-05	1 qt bottle
G40M Brake Grease	42820-04	squeeze packet
Genuine Harley-Davidson Extended Life Antifreeze and Coolant	99822-02	1 gal container
Genuine Harley-Davidson H-D 360 20W50 Motorcycle Oil	99816-2050/00QT	1 qt bottle
Harley-Davidson Adhesive (Griplock)	99839-95	10 g tube
Harley-Davidson High Performance Sealant - Gray	99650-02	1.9 oz squeeze tube
Harley-Davidson Leather Dressing	98261-91V	6 oz can
Harley-Davidson Seal Grease	11300005	1 oz tube
Harley Lube	94968-09	1/4 oz needle dispenser
Hylomar Gasket and Thread Sealant	99653-85	3.0 oz tube
Loctite 222 Low Strength Threadlocker and Sealant (purple)	99811-97	6 mL tube
Loctite 243 Medium Strength Threadlocker and Sealant (blue)	99642-97	6 mL tube
	11100005	50 mL bottle
Loctite 246 Medium Strength/High Temperature Threadlocker (blue)		
Loctite 262 High Strength Threadlocker and Sealant (red)	94759-99	6 mL tube
Loctite 271 High Strength Threadlocker and Sealant (red)		6 mL tube
	11100006	50 mL bottle
Loctite 411 Prism Instant Adhesive		
Loctite 420 Super Bonder Adhesive		
Loctite 565 Thread Sealant	99818-97	6 mL tube
Loctite 770 Prism Primer		
Loctite 7649 Cleaner/Primer	98968-99	1.75 oz bottle
PJ1 Super Cleaner99878-87TA	98968-99	13 oz aerosol can
Screamin' Eagle Assembly Lube	11300002	4 oz tube
Screamin' Eagle SYN3 Full Synthetic Motorcycle Lubricant 20W50	99824-03/00QT	1 qt bottle
Special Purpose Grease	99857-97A	14 oz cartridge
Type "E" Hydraulic Fork Oil	62600026	16 oz bottle
Wheel Bearing Grease	99855-89	1 lb can

	99856-92	14 oz cartridge
* Not a Harley-Davidson part number		

Always use a good quality unleaded gasoline. Octane ratings are usually found on the pump. Refer to Table 1.

WARNING

Avoid spills. Slowly remove filler cap. Do not fill above bottom of filler neck insert, leaving air space for fuel expansion. Secure filler cap after refueling. Gasoline is extremely flammable and highly explosive, which could result in death or serious injury. (00028a)

WARNING

Use care when refueling. Pressurized air in fuel tank can force gasoline to escape through filler tube. Gasoline is extremely flammable and highly explosive, which could result in death or serious injury. (00029a)

Modern service station pumps dispense a high flow of gasoline into a motorcycle fuel tank. This can cause air entrapment and pressurization.

Table 1. Octane Rating

SPECIFICATION	RATING
Pump Octane (R+M)/2	91 (95 RON)

Harley-Davidson motorcycles are designed to get the best performance and efficiency using unleaded gasoline. Most gasoline is blended with alcohol and/or ether to create oxygenated blends. The type and amount of alcohol or ether added to the fuel is important.

NOTICE

Do not use gasoline that contains methanol. Doing so can result in fuel system component failure, engine damage and/or equipment malfunction. (00148a)

- Gasoline/METHYL TERTIARY BUTYL ETHER (MTBE) blends are a mixture of gasoline and as much as 15 percent MTBE. Gasoline/MTBE blends use in your motorcycle is approved.
- ETHANOL fuel is a mixture of ethanol (grain alcohol) and unleaded gasoline and can have an impact on fuel mileage. Fuels with an ethanol content of up to 10 percent may be used in your motorcycle without affecting vehicle performance. U.S. EPA regulations currently indicate that fuels with 15 percent ethanol (E15) are restricted from use in motorcycles at the time of this publication. Some motorcycles are calibrated to operate with higher ethanol concentrations to meet the fuel standards in certain countries.
- REFORMULATED OR OXYGENATED GASOLINES (RFG) describes gasoline blends that are specifically designed to burn cleaner than other types of gasoline. This results in fewer tailpipe emissions. They are also formulated to evaporate less when filling the tank. Reformulated gasolines use additives to oxygenate the gas. Your motorcycle will run normally using this type of fuel. Harley-Davidson recommends using it whenever possible as an aid to cleaner air in our environment.
- Do not use racing fuel or fuel containing methanol. Use of these fuels will damage the fuel system.
- Using fuel additives other than those approved for use by Harley-Davidson may damage the engine, fuel system and other components.

Some gasoline blends might adversely affect starting, performance or fuel efficiency. If any of these problems are experienced, try a different brand of gasoline or gasoline with a higher octane blend.

CAUTION

Prolonged or repeated contact with used motor oil may be harmful to skin and could cause skin cancer. Promptly wash affected areas with soap and water. (00358b)

CAUTION

If engine oil is swallowed, do not induce vomiting. Contact a physician immediately. In case of contact with eyes, immediately flush with water. Contact a physician if irritation persists. (00357d)

NOTICE

Do not switch lubricant brands indiscriminately because some lubricants interact chemically when mixed. Use of inferior lubricants can damage the engine. (00184a)

Engine oil is a major factor in the performance and service life of the engine. Use the proper grade of oil for the lowest temperature expected before the next oil change. Refer to Table 1.

This motorcycle was originally equipped with GENUINE HARLEY-DAVIDSON H-D 360 MOTORCYCLE OIL 20W50. H-D 360 is the preferred oil under normal operating conditions. If operation under extreme cold or heat are expected, refer to Table 1 for alternative choices.

If H-D 360 is not available, add oil certified for diesel engines. Acceptable designations include: CH-4, CI-4 and CJ-4. The preferred viscosities, in descending order are: 20W50, 15W40 and 10W40.

At the first opportunity, see an authorized dealer to change back to 100 percent Harley-Davidson oil.

Table 1. Recommended Engine Oils

TYPE	VISCOSITY	RATING	LOWEST AMBIENT TEMPERATURE	COLD-WEATHER STARTS BELOW 50 °F (10 °C)
Screamin' Eagle SYN3 Full Synthetic Motorcycle Lubricant	SAE 20W50	HD 360	Above -1 °C (30.2 °F)	Excellent
Genuine Harley-Davidson H-D 360 Motorcycle Oil	SAE 20W50	HD 360	Above 4 °C (39.2 °F)	Good
Genuine Harley-Davidson H-D 360 Motorcycle Oil	SAE 50	HD 360	Above 16 °C (60.8 °F)	Poor
Genuine Harley-Davidson H-D 360 Motorcycle Oil	SAE 60	HD 360	Above 27 °C (80.6 °F)	Poor

Change engine oil often in colder climates. If motorcycle is frequently ridden less than 24 km (15 mi), in ambient temperatures below 16 °C (60 °F), reduce oil change intervals to 2,400 km (1500 mi).

NOTE

Lower ambient temperatures require more frequent oil changes.

Water vapor is a normal by-product of combustion . During cold-weather operation, some water vapor condenses to liquid form on the cool surfaces inside the engine. In freezing weather, this water becomes slush or ice. If the engine is not warmed to operating temperature, accumulated slush or ice blocks the oil lines and causes engine damage. Over time, water will accumulate, mix with the engine oil and form a sludge that is harmful to the engine.

If the engine is allowed to warm to normal operating temperature, most of the water evaporates and exits through the crankcase breather.

CAUTION

Prolonged or repeated contact with used motor oil may be harmful to skin and could cause skin cancer. Promptly wash affected areas with soap and water. (00358b)

NOTICE

Do not overfill oil. Doing so can result in oil carryover to the air cleaner leading to equipment damage and/or equipment malfunction. (00190b)

NOTE

Check engine oil level at each complete fuel refill.

Oil Level Cold Check

1. Place vehicle on level ground resting on the jiffy stand.

NOTE

Oil level on a cold engine should never be above the midway point.

2. See Figure 1. Check engine oil level.
   a. Remove filler plug/dipstick.
   b. Wipe off the dipstick.
   c. Insert the dipstick and tighten into the fill spout.
   d. Remove filler plug/dipstick.
   e. See Figure 2. Check oil level. The correct cold oil level is midway (2) between the ADD QT (1) and FULL HOT (3) marks on the dipstick.
3. If oil level is at or below the ADD QT mark, add only enough oil to bring the level to the ADD QT mark.
4. Start and idle engine on jiffy stand for two minutes. Turn off engine.
5. Check oil level. Add only enough to bring level midway between the ADD QT (1) and FULL HOT (3).

Oil Level Hot Check

NOTICE

Do not allow hot oil level to fall below Add/Fill mark on dipstick. Doing so can result in equipment damage and/or equipment malfunction. (00189a)

NOTE

Perform engine oil level hot check only with engine oil at normal operating temperature.

1. Ride motorcycle until engine oil reaches at least 93 °C (199.3 °F) or higher.
2. Allow engine to idle for 1-2 minutes on jiffy stand. Turn off engine.
3. See Figure 1. Check oil level.
   a. Remove filler plug/dipstick.

b. Wipe off the dipstick.
c. Insert the dipstick and tighten into the fill spout.
d. Remove filler plug/dipstick.
e. See Figure 2. Check oil level. Oil level must register between the ADD QT and FULL HOT marks on the dipstick.

4. If oil level is at or below the ADD QT mark, add only enough oil to bring the level to the FULL HOT mark. Do not overfill.

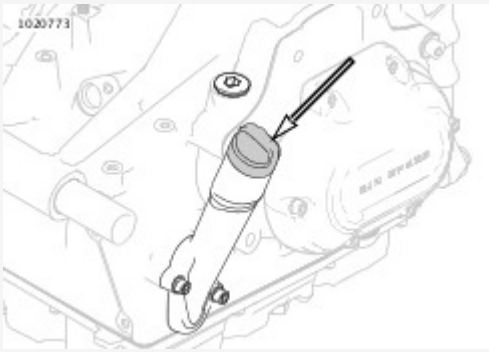

View interactive image

Figure 1. Engine Oil Filler Plug

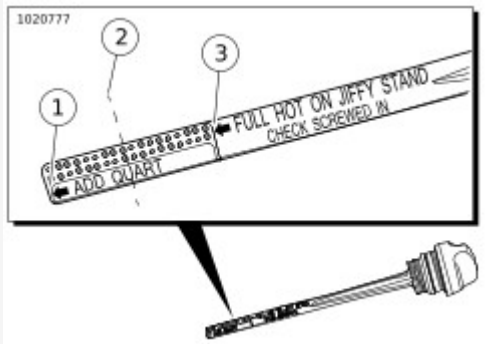

View interactive image

1	ADD QT mark
2	Cold check level
3	FULL HOT mark

Figure 2. Engine Oil Dipstick

Special Tools

Description	Part Number	Qty.
OIL FILTER WRENCH	94686-00	1
OIL FILTER WRENCH	94863-10	1

WARNING

Be sure that no lubricants or fluids get on tires, wheels or brakes when changing fluid. Traction can be adversely affected, which could result in loss of control of the motorcycle and death or serious injury. (00047d)

NOTICE

Do not switch lubricant brands indiscriminately because some lubricants interact chemically when mixed. Use of inferior lubricants can damage the engine. (00184a)

- Change engine oil at the first 1,600 km (1000 mi) for a **new** engine. After the initial service, change oil at regular intervals in normal service at warm or moderate temperatures. Refer to Maintenance → MAINTENANCE SCHEDULE → General.
- Change oil at more frequent intervals in cold weather or severe operating conditions. See Maintenance → FUEL AND OIL.

1. Run motorcycle until engine is at normal operating temperature. Turn off engine.
2. Remove filler plug/dipstick.

NOTE

Replace drain plug O-ring.

3. See Figure 1. Remove the oil drain plug (2) and O-ring. Allow oil to drain completely.

NOTE

Use P&A Oil Catcher (Part No. 62700199) or equivalent to keep drain oil off crankcase when removing oil filter. Residual drain oil could falsely appear as a crankcase oil leak at a later time.

1. Remove the oil filter using oil filter wrench and hand tools. Do not use with air tools.

   Special Tool: OIL FILTER WRENCH (94863-10)

   Special Tool: OIL FILTER WRENCH (94686-00)

2. Clean the oil filter mount flange.
3. Clean any residual oil for crankcase and transmission housing.
4. See Figure 2. Install **new** oil filter.
   a. Lubricate gasket with a thin film of clean engine oil.
   b. Install **new** oil filter.
   c. Hand-tighten oil filter one-half to three-quarters of a turn after gasket first contacts filter mounting surface. Do NOT use oil filter wrench for installation.
5. Install engine oil drain plug and **new** O-ring.

Torque: 19–28.5 N·m (14–21 ft-lbs) *Engine oil drain plug*

NOTE

Use the proper grade of oil for the lowest temperature expected before the next oil change. Refer to **Maintenance → FUEL AND OIL → Engine Lubrication → Recommended Engine Oils** for recommended oil.

6. Add an initial volume of engine oil. Refer to **Table 1**.

Table 1. Initial Oil Fill

ITEM	QUANTITY
Engine oil initial fill	3.8 L (4.0 qt)

10. Verify proper oil level. See **Maintenance → REPLACE ENGINE OIL AND FILTER → Check Engine Oil Level**.
    a. Perform engine oil level **cold check**.
    b. Start engine and carefully check for oil leaks around drain plug and oil filter.
    c. Perform engine oil level **hot check**.

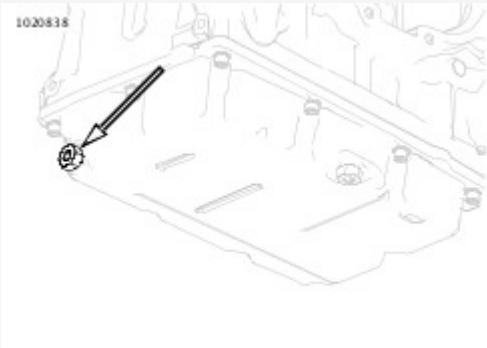

View interactive image

Figure 1. Engine Oil Drain Plug

View interactive image

Figure 2. Lubricating New Oil Filter Gasket

1. Run motorcycle until engine is at normal operating temperature. Turn off engine.

> **WARNING**
>
> Be sure that no lubricants or fluids get on tires, wheels or brakes when changing fluid. Traction can be adversely affected, which could result in loss of control of the motorcycle and death or serious injury. (00047d)

2. Secure motorcycle upright (not leaning on jiffy stand) on a level surface.
3. See Figure 1. Drain primary chaincase.
4. Clean drain plug magnet. If plug has excessive debris, inspect the condition of chaincase components.
5. Install drain plug and **new** O-ring. Tighten.
   Torque: 19–28.5 N·m (14–21 ft-lbs) *Primary chaincase drain plug*

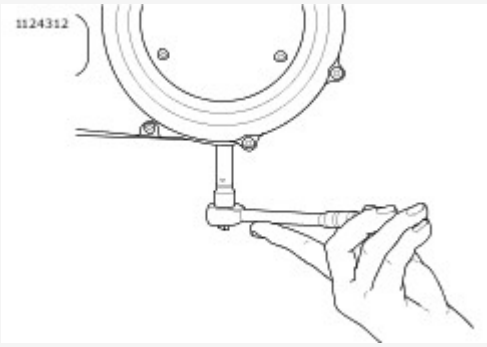

View interactive image

Figure 1. Removal/Installation of Chaincase Drain Plug

6. See Figure 3. Remove screws (3).
7. Remove clutch inspection cover (2).
8. Remove seal (1). Wipe oil from primary cover and O-ring groove.

> **NOTICE**
>
> Do not overfill the primary chaincase with lubricant. Overfilling can cause rough clutch engagement, incomplete disengagement, clutch drag and/or difficulty in finding neutral at engine idle. (00199b)

9. Add lubricant.
   a. Pour specified amount of FORMULA+ TRANSMISSION AND PRIMARY CHAINCASE LUBRICANT through clutch inspection cover opening. Refer to Table 1.
   b. See Figure 2. Proper level is approximately at bottom of pressure plate OD.

Table 1. Primary Chaincase Lubricant

ITEM	DRY FILL(2)		WET FILL(3)	
	OZ	L	OZ	L
Amount(1)	40	1.18	36	1.06

(1) Amount is approximate. Fill to bottom of pressure plate OD with vehicle upright.

(2) Cover was removed and installed.

(3) Lubricant was drained through the drain plug only.

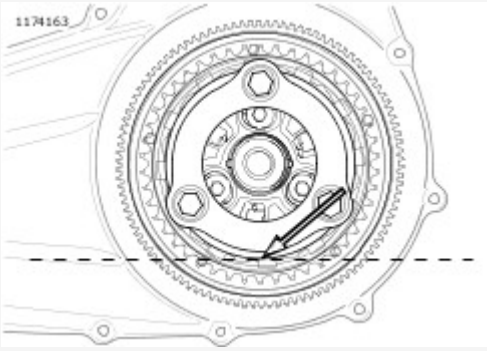

View interactive image

Figure 2. Primary Chaincase Lubricant Level

10. See **Figure 3**. Install **new** seal (1):
11. Install clutch inspection cover (2).
12. Install screws (3). Tighten finger tight.
13. See **Figure 4**. Tighten screws in sequence.
    Torque: 2.8–3.9 N·m (25–35 **in-lbs**) *Clutch inspection cover screws*

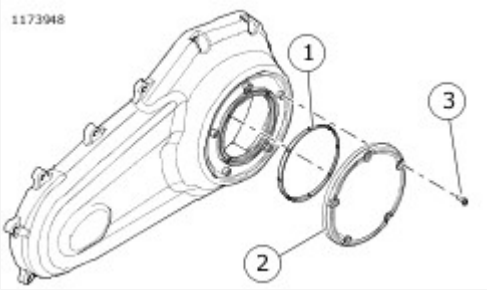

View interactive image

1	Seal
2	Clutch inspection cover
3	Screw and captive washer (5)

Figure 3. Clutch Cover (Typical)

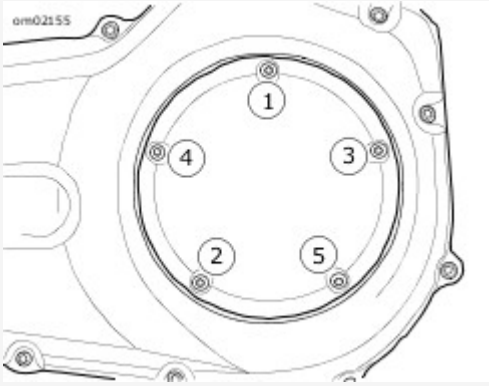

View interactive image

Figure 4. Clutch Cover Tightening Sequence

NOTE

Check transmission fluid with the motorcycle at ambient temperature. Inspect transmission dipstick O-ring. Replace if necessary.

1. Park motorcycle on a level surface on jiffy stand.
2. Remove right side cover. See **Chassis → RIGHT SIDE COVER → Remove**
3. See **Figure 1**. Remove transmission filler plug/dipstick. Wipe dipstick clean.
4. Install filler plug/dipstick until O-ring contacts the case. Do not tighten.
5. See **Figure 2**. Remove filler plug/dipstick. Check lubricant level on dipstick. Proper oil level is between the Add (A) (1) and Full (F) (2) marks.

NOTICE

Mixing mineral-based lubricants with SYN-3 in the transmission can damage the transmission. (00452b)

6. If lubricant level is low, add recommended Harley-Davidson lubricant to bring level to between the A mark and the F marks. Refer to **Table 1**.
7. Install filler plug/dipstick. Tighten to .
   Torque: 2.8–8.5 N·m (25–75 **in-lbs**) *Transmission filler plug/dipstick*
8. Install right side cover. See **Chassis → RIGHT SIDE COVER → Install**

View interactive image

Figure 1. Transmission Filler Plug/Dipstick Location

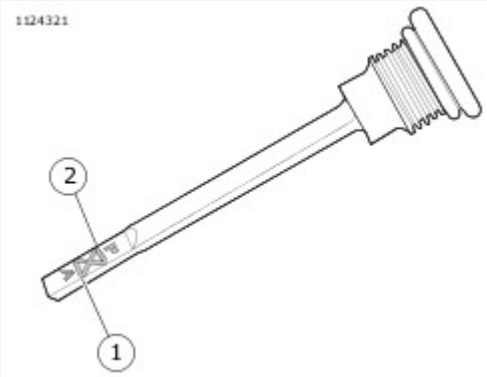

View interactive image

1	Add (A)
2	Full (F)

Figure 2. Transmission Lubricant Level

Table 1. Transmission Lubricant

MODEL	LUBRICANT
All	FORMULA+ TRANSMISSION AND PRIMARY CHAIN LUBRICANT

1. See Maintenance → REPLACE TRANSMISSION LUBRICANT → Check Transmission Lubricant → Transmission Filler Plug/Dipstick Location. Remove transmission filler plug/dipstick.

> **WARNING**
>
> Be sure that no lubricants or fluids get on tires, wheels or brakes when changing fluid. Traction can be adversely affected, which could result in loss of control of the motorcycle and death or serious injury. (00047d)

2. See Figure 1. Remove transmission drain plug. Drain transmission.
3. Clean and inspect drain plug and O-ring.

> **NOTICE**
>
> Do not over-tighten filler or drain plug. Doing so could result in a lubricant leak. (00200b)

4. Install drain plug with **new** O-ring. Tighten. Do not over-tighten.
   Torque: 19–28.5 N·m (14–21 ft-lbs) *Transmission drain plug*
5. Fill the transmission with recommended Harley-Davidson lubricant. Refer to Maintenance → REPLACE TRANSMISSION LUBRICANT → Check Transmission Lubricant → Transmission Lubricant.
   Volume: 0.83 L (28 fl oz)
6. Check lubricant level. Add enough lubricant to bring the level between the add (A) and full (F) marks. See Maintenance → REPLACE TRANSMISSION LUBRICANT → Check Transmission Lubricant → Transmission Lubricant Level.
7. Install filler plug/dipstick. Tighten.
   Torque: 2.8–8.5 N·m (25–75 **in-lbs**) *Transmission filler plug/dipstick*

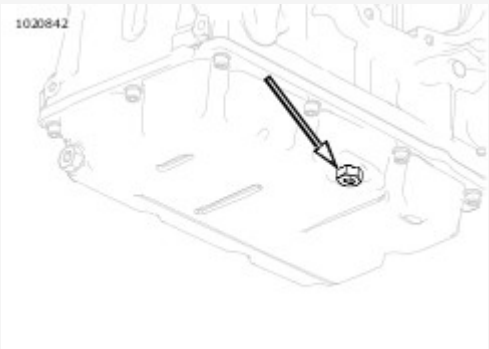

View interactive image

Figure 1. Transmission Drain Plug

WARNING

Match tires, tubes, rim strips or seals, air valves and caps to the correct wheel. Contact a Harley-Davidson dealer. Mismatching can lead to tire damage, allow tire slippage on the wheel or cause tire failure, which could result in death or serious injury. (00023c)

WARNING

Harley-Davidson front and rear tires are not the same. Interchanging front and rear tires can cause tire failure, which could result in death or serious injury. (00026a)

NOTE

- Tubeless tires are used on all Harley-Davidson cast wheels.
- Tire sizes are molded on the tire sidewall. Inner tube sizes are printed on the tube.
- Store **new** tires on a horizontal tire rack. Avoid stacking **new** tires in a vertical stack. The weight of the stack compresses the tires and crushes the beads.

Tire Pressure

WARNING

Be sure tires are properly inflated, balanced, undamaged, and have adequate tread. Inspect your tires regularly and see a Harley-Davidson dealer for replacements. Riding with excessively worn, unbalanced, improperly inflated, overloaded or damaged tires can lead to tire failure and adversely affect stability and handling, which could result in death or serious injury. (00014b)

Check tire pressure:

- As part of the pre-ride checklist.
- At every scheduled service interval.

1. Check tire pressures when tires are cold. Compare with specifications. Refer to Table 1.

NOTE

Harley-Davidson does not perform any testing with only nitrogen in tires. Harley-Davidson neither recommends nor discourages the use of pure nitrogen to inflate tires.

Tread

WARNING

Replace tire immediately with a Harley-Davidson specified tire when wear bars become visible or only 1 mm (1/32 in) tread depth remains. Riding with a worn tire could result in death or serious injury. (00090c)

Check tire tread:

- As part of the pre-ride checklist.

- At every scheduled service interval.

  1. Inspect each tire for punctures, cuts and breaks.
  2. See **Figure 1** , **Figure 2** and **Figure 3**. Inspect each tire for wear. Replace tires before they reach the tread wear indicators.

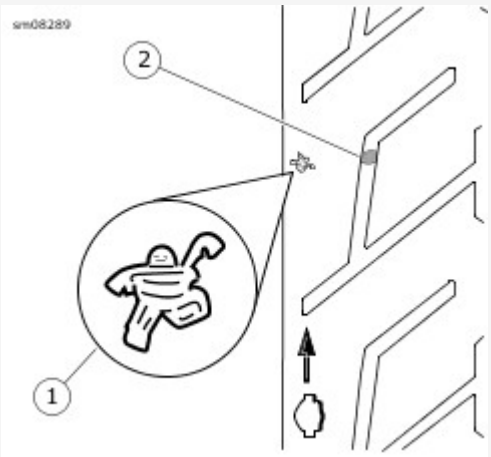

View interactive image

1	Indicator
2	Tread wear bar

Figure 1. Tread Wear Indicator: Michelin Tires

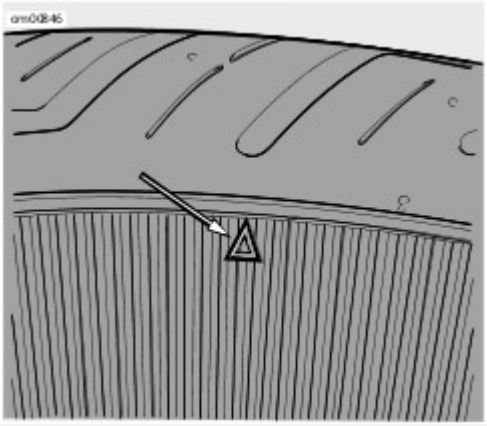

View interactive image

Figure 2. Dunlop Sidewall Tread Wear Indicator Bar Locator

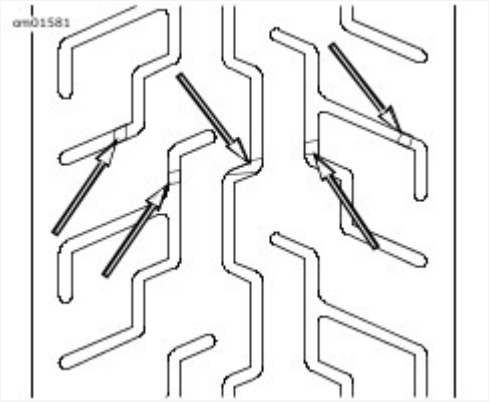

View interactive image

Figure 3. Dunlop Tread Wear Indicator Bar Appearance

Table 1. Specified Tires

MODEL	MOUNT	SIZE	SPECIFIED TIRE	PRESSURE (COLD 20 °C (68.0 °F)) *(1)*	
				PSI	KPA
FLDE	front	16 in	Dunlop D402F MT90B16 72H WW	36	248
FLFB/S	front	18 in	Michelin Scorcher 11 160/60R18 70V BW	36	248
FLHC/S, FLSL	front	16 in	Dunlop D401F 130/90B16 53H BW	36	248
FXBB	front	19 in	Dunlop D401F 100/90B19 57H BW	30	207
FXBR/S	front	21 in	Michelin Scorcher 11 130/60B21 63H BW	36	248
FXFB/S	front	16 in	Dunlop D429F 150/80B16 71H BW	36	248
FXLR	front	19 in	Michelin Scorcher 31 110/90B19 62H BW	30	207
FLSB	front	18 in	Michelin Scorcher 31 130/70B18 63H BW	36	248
FXDRS	front	19 in	Michelin Scorcher 11 120/70ZR19 60W	36	248
FLDE	rear	16 in	Dunlop D402 MU85B16 77H WW	40	276
FLFB/S, FXBR/S, FXDRS	rear	18 in	Michelin Scorcher 11 240/40R18 79V BW	42	290
FLHC/S, FLSL, FXBB	rear	16 in	Dunlop D401 150/80B16 77H BW	40	276
FXFB/S	rear	16 in	Dunlop 180/70B16 77H BW	40	276
FXLR, FLSB	rear	16 in	Michelin Scorcher 31 180/70B16 77H BW	40	276

(1) Tire pressure varies with changes in ambient and tire temperature. Check pressure with tires cold 20 °C (68 °F). Increase tire pressure by 6.9 kPa (1 psi) for every 10 °F (5 °C) in ambient air temperature above this point.

Inspect

Tread wear indicators appear on tire tread surfaces when 0.8 mm (0.031 in) or less of tire tread remains. Always replace tires before the tread wear indicators appear on the surface of the tire.

See **Maintenance → INSPECT TIRES AND WHEELS → General → Tread Wear Indicator: Michelin Tires** or **Maintenance → INSPECT TIRES AND WHEELS → General → Dunlop Sidewall Tread Wear Indicator Bar Locator**. The locations of tread wear indicators are identified by the marks on the tire sidewalls.

When to Replace Tires

New tires are needed if:

- Tread wear indicators become visible on the tread surfaces.
- Tire cords or fabric become visible through cracked sidewalls, snags or deep cuts.
- A bump, bulge or split in the tire.
- A puncture, cut or other damage to the tire that cannot be repaired.

NOTE

Replace bearings in sets only. See **Chassis → SEALED WHEEL BEARINGS**.

1. Replace when bearings exceed end play service wear limit of 0.051 mm (0.002 in).
2. Inspect any time the wheels are removed.
    a. Inspect the play of the wheel bearings by hand while they are in the wheel.
    b. Rotate the inner bearing race and check for abnormal noise.
    c. Make sure that bearing rotates smoothly.
3. Check wheel bearings and axle spacers for wear and corrosion. Excessive play or roughness indicates worn bearings.

Special Tools

Description	Part Number	Qty.
SPOKE TORQUE WRENCH	HD-48985	1
SPOKE WRENCH	HD-94681-80	1

WARNING

Spokes that are too tight can draw nipples through the rim or distort hub flanges. Spokes that are too loose can continue to loosen when put in service. Either condition can adversely affect stability and handling, which could result in death or serious injury. (00286a)

WARNING

Do not over-tighten spoke nipples. Protruding spoke nipples can damage rim seal, resulting in rapid tire deflation, which could cause death or serious injury. (00611c)

NOTICE

When lifting a motorcycle using a jack, be sure jack contacts both lower frame tubes where down tubes and lower frame tubes converge. Never lift by jacking on cross-members, oil pan, mounting brackets, components or housings. Failure to comply can cause serious damage resulting in the need to perform major repair work. (00586d)

Identify Wheel Spoke Groups

NOTE

Spokes are grouped in sets of four.

1. Raise the wheel.
2. See Figure 1. Starting at the valve stem, identify the first group of four spokes (1-4).
3. Using a different color for each spoke in the group, draw an alignment mark across the spoke nipple and onto the rim.
4. Continue around the wheel marking the rest of the spokes the same as they were marked in the previous steps.

Adjust Wheel Spokes

NOTE

- Do not tighten spoke more than one-quarter turn past alignment mark. If more tension is needed, label spoke and check after completing rest of wheel.
- Do not use the spoke torque wrench to loosen spokes. Use SPOKE WRENCH (Part Number:HD-94681-80) to loosen spokes.

1. See Figure 1. Starting with the first group of spokes, loosen spoke (1) one-quarter turn using SPOKE WRENCH (Part Number:HD-94681-80).

2. Using **SPOKE TORQUE WRENCH (Part Number:HD-48985)** tighten spoke (1) to the value listed in **Table 1**.
    a. While tightening, if the torque wrench clicks before the alignment marks align, continue to turn the spoke nipple until the marks align.
    b. If the marks align and torque specification has not been reached, tighten the spoke nipple until the correct torque is achieved. Do not turn spoke nipple more than one-quarter turn past alignment mark.
3. Repeat previous two steps for spoke (4) in the same group.
4. Continue around the wheel checking spokes 1 and 4 until all groups are done.
5. Repeat procedure for spokes (2, 3) in each group.

NOTE

When checking any spokes that were labeled, make sure to use the original alignment mark.

6. Check spokes, if any, that were labeled as not reaching the proper torque value after tightening one-quarter turn past alignment mark.
    a. Loosen spoke one-quarter turn past original alignment mark using **SPOKE WRENCH (Part Number:HD-94681-80)**.
    b. While tightening, if the torque wrench clicks before the alignment marks align, continue to turn the spoke nipple until the marks align.
    c. If the marks align and torque specification has not been reached, tighten the spoke nipple until the correct torque is achieved. Do not turn spoke nipple more than one-quarter turn past alignment mark.
7. True the wheel. See **Chassis → CHECKING AND TRUING WHEELS**.

Table 1. Spoke Nipple Torque Specification

RIM TYPE	MINIMUM TORQUE
All	6.2 N·m (55 **in-lbs**)

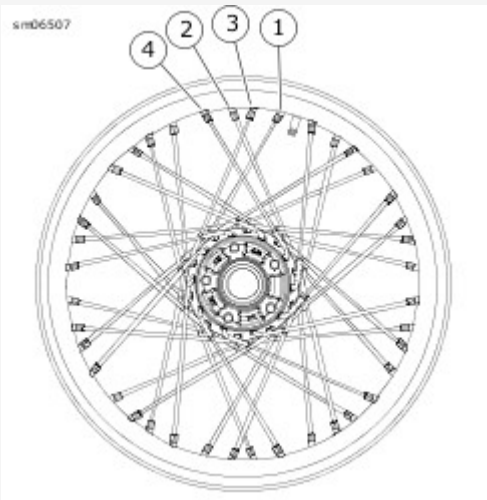

View interactive image

Figure 1. Tightening Laced Wheels (typical)

Inspect and lubricate the following items according to **Maintenance → MAINTENANCE SCHEDULE**.

If service is on muddy or dusty roads, clean and lubricate at shorter intervals.

Consumables

Description	Part Number	Size
ANTI-SEIZE LUBRICANT	98960-97	29.6 ml (1 fl oz)
CCI #20 BRAKE GREASE	42830-05	29.6 ml (1 fl oz)
HARLEY LUBE	94968-09	7.5 ml (½ fl oz)
HARLEY® AEROSOL LUBE	93600113	297 g (10.5 oz)
SPECIAL PURPOSE GREASE	99857-97A	414 ml (14 fl oz)

See Figure 1 for general location of lubrication points.

1. **Front brake hand lever:** Use grease on front brake lever pivot pin hole and end of piston that contacts brake lever. See Chassis → FRONT BRAKE MASTER CYLINDER.
   CCI #20 BRAKE GREASE (42830-05)
2.

   NOTE

   HARLEY LUBE (94968-09) and HARLEY® AEROSOL LUBE (93600113) are formulated to be compatible with the clutch cable lining. Use of other lubricants could damage clutch cable lining.

   Clutch cable. See Chassis → CLUTCH CONTROL.
   HARLEY LUBE (94968-09)HARLEY® AEROSOL LUBE (93600113)
3. **Clutch hand lever.** See Chassis → CLUTCH CONTROL.
   HARLEY LUBE (94968-09)HARLEY® AEROSOL LUBE (93600113)
4. **Jiffy stand:** Lubricate clevis pin and spring hook groove. See Chassis → JIFFY STAND.
   ANTI-SEIZE LUBRICANT (98960-97)
5. **Steering head bearings:** Lubricate steering head bearings. See Maintenance → ADJUST AND LUBRICATE STEERING HEAD BEARINGS.
   SPECIAL PURPOSE GREASE (99857-97A)
6. **Fork lock:** Lubricate lock internal components.
   HARLEY® AEROSOL LUBE (93600113)HARLEY LUBE (94968-09)

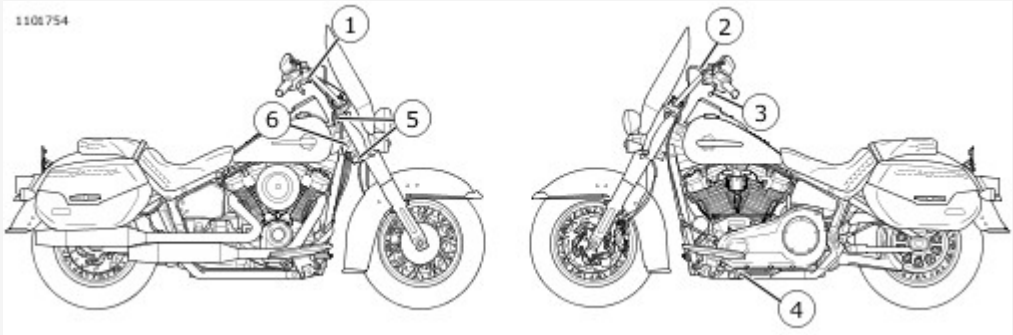

View interactive image

1	Front brake hand lever
2	Clutch cable
3	Clutch hand lever
4	Jiffy stand
5	Steering head bearings
6	Fork lock

Figure 1. Lubrication Points

Special Tools

Description	Part Number	Qty.
DOT 4 BRAKE FLUID MOISTURE TESTER	HD-48497-A	1

Consumables

Description	Part Number	Size
DOT 4 BRAKE FLUID	41800219	355 ml (12 fl oz)

NOTICE

Do not allow dirt or debris to enter the master cylinder reservoir. Dirt or debris in the reservoir can cause improper operation and equipment damage. (00205c)

NOTE

- At every service, check moisture content of fluid using **DOT 4 BRAKE FLUID MOISTURE TESTER (Part Number:HD-48497-A)**. Follow the instructions included with tool.
- Flush brake system and replace **DOT 4 BRAKE FLUID (41800219)** fluid every two years or sooner if brake fluid test shows moisture content is 3% or greater.
- Fluid should never need to be added or removed from the system during normal wear, except for fluid replacement as specified in the maintenance schedule.
- Fluid level in reservoir will decrease with brake wear. Reservoir volume is adequate to provide fluid to the wear limits of the pads and rotors.

Check brake pads and discs:

- At every scheduled service interval.
- When removed during service procedures.

NOTE

When checking the brake pads and discs, inspect the brake hoses for correct routing and any signs of damage.

Brake Pads

WARNING

Always replace brake pads in complete sets for correct and safe brake operation. Improper brake operation could result in death or serious injury. (00111a)

WARNING

Contact with DOT 4 brake fluid can have serious health effects. Failure to wear proper skin and eye protection could result in

death or serious injury.

- If inhaled: Keep calm, remove to fresh air, seek medical attention.
- If on skin: Remove contaminated clothing. Rinse skin immediately with plenty of water for 15-20 minutes. If irritation develops, seek medical attention.
- If in eyes: Wash affected eyes for at least 15 minutes under running water with eye lids held open. If irritation develops, seek medical attention.
- If swallowed: Rinse mouth and then drink plenty of water. Do not induce vomiting. Immediate medical attention required.
- See Safety Data Sheet (SDS) for more details available at sds.harley-davidson.com

(00240d)

NOTICE

DOT 4 brake fluid will damage painted and body panel surfaces it comes in contact with. Always use caution and protect surfaces from spills whenever brake work is performed. Failure to comply can result in cosmetic damage. (00239c)

1. Inspect for grit and debris buildup at caliper piston areas.
   Clean if necessary.
   a. Rinse area with warm soapy water.
   b. Dry using low-pressure compressed air.
2.

   NOTE

   Always replace both pads in a caliper as a set.

   See Figure 1. Measure brake pad thickness.
   a. Replace brake pads (3) if friction material thickness is equal to or less than dimension.
      Dimension: 1.02 mm (0.04 in)
   b. See Maintenance → INSPECT BRAKES.

Brake Disc

NOTE

Minimum acceptable thickness is stamped on side of disc.

1. Measure thickness.
   a. Measure thickness with a micrometer.
   b. Replace disc if disc is scored or measured thickness is less minimum.
2. Measure runout.
   a. Measure runout near the outside diameter of the disc using a dial indicator.
   b. Replace disc if runout meets or exceeds dimension.
      Dimension: 0.2 mm (0.008 in)

Replace disc if warped, badly scored or worn beyond service limit. See Chassis → FRONT WHEEL or Chassis → REAR WHEEL.

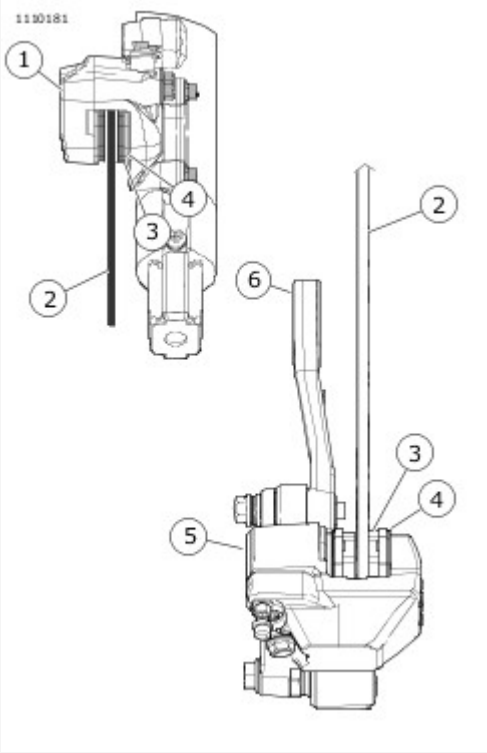

View interactive image

1	Front brake caliper (viewed from below)
2	Brake disc
3	Brake pads
4	Backplate
5	Rear brake caliper (viewed from above)
6	Rear brake caliper mounting bracket

Figure 1. Brake Pad Inspection

Remove

1. Remove front caliper. See Chassis → FRONT BRAKE CALIPER.
2. See Figure 1. Remove brake pad hanger pins (3).
3. Remove brake pads.

NOTE

Loosening the reservoir cap allows air to escape and helps prevent contamination. It also helps prevent fluid from squirting out of reservoir.

4. Remove brake pad spring (4).
5. Loosen front master cylinder reservoir cap.

NOTE

As pistons are pushed back into caliper, verify that fluid does not overflow reservoir. Remove fluid if necessary.

6. Using the old brake pad and a C-clamp, retract the pistons fully into the caliper.

Install

WARNING

Always replace brake pads in complete sets for correct and safe brake operation. Improper brake operation could result in death or serious injury. (00111a)

1. Install **new** pads into caliper.

NOTE

See Figure 1. Brake pad spring (4) must be installed with the stamped arrow facing up.

2. Loosely install **new** brake pad hanger pins (3) and **new** brake pad spring (4).
3. Install front caliper. See Chassis → FRONT BRAKE CALIPER.
4. Tighten brake pad hanger pins.
   Torque: 14.7–19.6 N·m (11–14 ft-lbs)

Front brake pad hanger pin

5. Pump brakes to move pistons out until brake pads contact rotor. Verify piston location against pads. If the front wheel is off the ground, rotate wheel to check for excessive brake pad drag.
6. Check fluid level in brake master cylinder reservoir. See **Maintenance → CHECK AND REPLACE BRAKE FLUID**.

> **WARNING**
>
> After repairing the brake system, test brakes at low speed. If brakes are not operating properly, testing at high speeds can cause loss of control, which could result in death or serious injury. (00289a)

7. Test brakes.

> **NOTE**
>
> Avoid making hard stops for the first 160 km (100 mi) in order to wear in the brakes properly.

   a. Turn ignition switch ON. Check operation of rear lamps.
   b. Test ride motorcycle. If brakes feel spongy, bleed brakes . See **Maintenance → CHECK AND REPLACE BRAKE FLUID**.

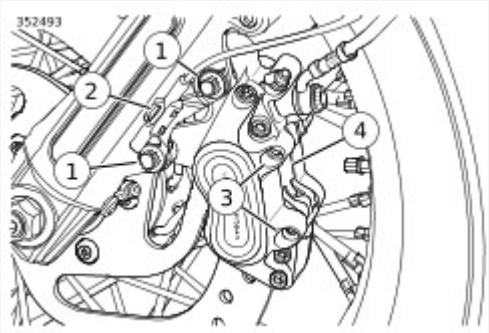

View interactive image

1	Caliper mounting bolt (2)
2	WSS (Wheel speed sensor) cable retainer - ABS (Anti-lock braking system) only
3	Brake pad hanger pin (2)
4	Brake pad spring

Figure 1. Front Brake Caliper

Remove

1. See Figure 1. Remove rear caliper (1). See Chassis → REAR BRAKE CALIPER.
2. Remove brake pad hanger pins (2).
   a. Inspect brake pad hanger pins for damage or wear, replace if needed.
3. Remove brake pads (4).
4.

   NOTE

   Loosening the reservoir cap allows air to escape and helps prevent contamination. It also helps prevent fluid from squirting out of reservoir.

   Loosen rear master cylinder reservoir cap.
5.

   NOTE

   As pistons are pushed back into caliper, verify that fluid does not overflow reservoir. Remove fluid if necessary.

   Using the old brake pad and a C-clamp, retract the pistons fully into the caliper.
6. Inspect brake pad retainer spring (5). Replace if needed.
7. See Figure 1 and Chassis → REAR BRAKE CALIPER → Disassemble → Rear Caliper Mounting Bracket. Remove retainer clip (3) from rear caliper mounting bracket.

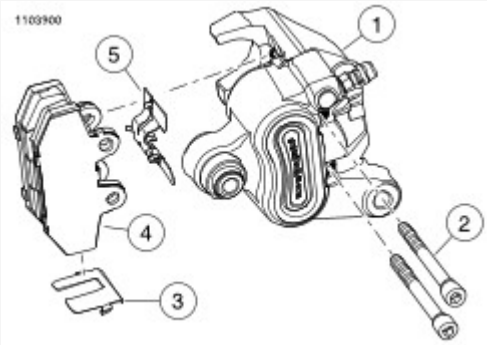

View interactive image

1	Rear caliper
2	Brake pad hanger pin (2)
3	Retainer clip
4	Brake pad (2)
5	Brake pad retaining spring

Figure 1. Rear Brake Pads

Install

1. See Figure 1. Install brake pad retaining spring (5).

> **WARNING**
>
> Always replace brake pads in complete sets for correct and safe brake operation. Improper brake operation could result in death or serious injury. (00111a)

2. Install **new** brake pads (4).
3. Install brake pad hanger pin (2). Hand tighten.

> **NOTE**
>
> Hanger pins are torqued after caliper is installed on vehicle.

4. See Figure 1 and Chassis → REAR BRAKE CALIPER → Disassemble → Rear Caliper Mounting Bracket. Install **new** retainer clip (3) onto rear caliper mounting bracket.
5. Install rear caliper. See Chassis → REAR BRAKE CALIPER.
6. Pump brakes to move pistons out until brake pads contact rotor. Verify piston location against pads. If the rear wheel is off the ground, rotate wheel to check for excessive brake pad drag.
7. Check fluid level in rear brake master cylinder reservoir. See Maintenance → CHECK AND REPLACE BRAKE FLUID.

> **WARNING**
>
> After repairing the brake system, test brakes at low speed. If brakes are not operating properly, testing at high speeds can cause loss of control, which could result in death or serious injury. (00289a)

8.

> **NOTE**
>
> Avoid making hard stops for the first 160 km (100 mi) in order to wear in the brakes properly.

Test brakes.

a. Turn ignition switch ON. Check operation of rear brake lamps.
b. Test ride motorcycle. If brakes feel spongy, bleed brakes. See Chassis → BLEED BRAKES.

Special Tools

Description	Part Number	Qty.
DOT 4 BRAKE FLUID MOISTURE TESTER	HD-48497-A	1

Consumables

Description	Part Number	Size
DOT 4 BRAKE FLUID	41800219	355 ml (12 fl oz)

WARNING

Clean reservoir filler cap or cover before removing. Use only DOT 4 brake fluid from a sealed container. Contaminated fluid can adversely affect braking or clutch disengagement, which could result in death or serious injury. (00504d)

WARNING

Contact with DOT 4 brake fluid can have serious health effects. Failure to wear proper skin and eye protection could result in death or serious injury.

- If inhaled: Keep calm, remove to fresh air, seek medical attention.
- If on skin: Remove contaminated clothing. Rinse skin immediately with plenty of water for 15-20 minutes. If irritation develops, seek medical attention.
- If in eyes: Wash affected eyes for at least 15 minutes under running water with eye lids held open. If irritation develops, seek medical attention.
- If swallowed: Rinse mouth and then drink plenty of water. Do not induce vomiting. Immediate medical attention required.
- See Safety Data Sheet (SDS) for more details available at sds.harley-davidson.com

(00240d)

NOTICE

DOT 4 brake fluid will damage painted and body panel surfaces it comes in contact with. Always use caution and protect surfaces from spills whenever brake work is performed. Failure to comply can result in cosmetic damage. (00239c)

NOTICE

Do not allow dirt or debris to enter the master cylinder reservoir. Dirt or debris in the reservoir can cause improper operation and equipment damage. (00205c)

NOTE

- At every service, check moisture content of fluid using **DOT 4 BRAKE FLUID MOISTURE TESTER (Part Number:HD-48497-A)**. Follow the instructions included with tool.
- Flush brake system and replace **DOT 4 BRAKE FLUID (41800219)** fluid every two years or sooner if brake fluid test shows moisture content is 3% or greater.

Fluid should never need to be added or removed from the system during normal wear, except for fluid replacement as specified in the maintenance schedule.

- Fluid level in reservoir will decrease with brake wear. Reservoir volume is adequate to provide fluid to the wear limits of the pads and rotors.

1. **Front brake:** Check fluid level.
   a. Set motorcycle upright and turn handlebar to level reservoir.
   b. See **Figure 1**. Check low-level mark on reservoir sight glass. See **Figure 2**. If necessary, add brake fluid to reservoir. **DOT 4 BRAKE FLUID (41800219)**
2. **Rear brake:** Check fluid level.
   a. Stand motorcycle upright (not leaning on jiffy stand) on a level surface.
   b. See **Figure 1**. Check low-level mark on reservoir sight glass. See **Figure 3**. If necessary, add brake fluid to reservoir. **DOT 4 BRAKE FLUID (41800219)**
3. If fluid level was below minimum mark:
   a. Check for brake system fluid leaks.
   b. Check that brake pads and rotors are properly installed and not worn beyond service wear limits. See **Maintenance → INSPECT BRAKES**.
4.

NOTE
Vent holes in front master cylinder cover face rear of motorcycle.

   If master cylinder reservoir cover was removed. Tighten.
   a. **Front:**
      Torque: 1–1.2 N·m (9–11 **in-lbs**) *Brake master cylinder, front, reservoir cover screws*
   b. **Rear:**
      Torque: 1–2 N·m (9–18 **in-lbs**) *Brake master cylinder, rear, reservoir cover screws*
5. Verify front brake hand lever and rear brake foot pedal have a firm feel when applied. If brakes are not firm, the brake system must be bled. See **Chassis → BLEED BRAKES**.

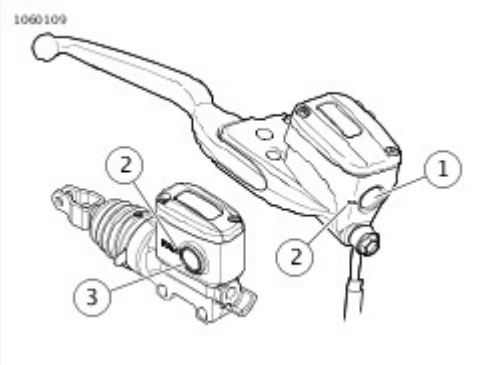

View interactive image

1	Front reservoir sight glass

2	Minimum mark
3	Rear reservoir sight glass

Figure 1. Brake Fluid Reservoirs

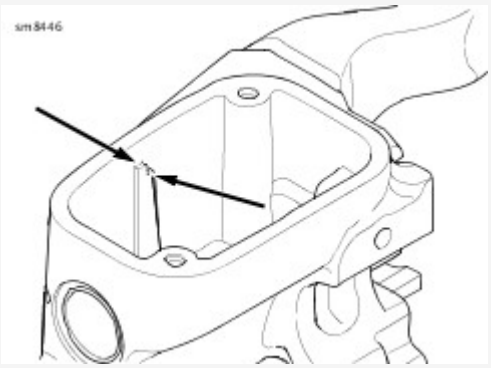

View interactive image

Figure 2. Front Master Cylinder Fill Level

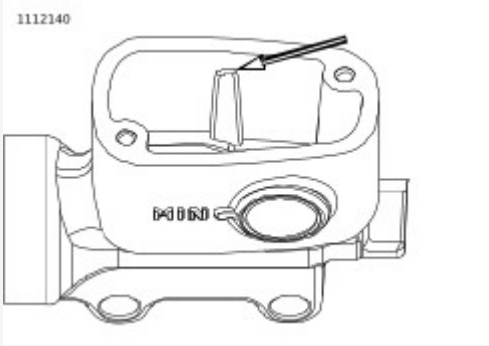

View interactive image

Figure 3. Rear Master Cylinder Fill Level

For this scheduled maintenance procedure, see **Chassis → BLEED BRAKES**.

Adjust

1. Stand motorcycle upright (not leaning on jiffy stand) on a level surface. Front wheel straight ahead.
2. See Figure 1. Access two piece clutch cable.
   a. Remove spring clip (1).
   b. Slide cover (2) up.

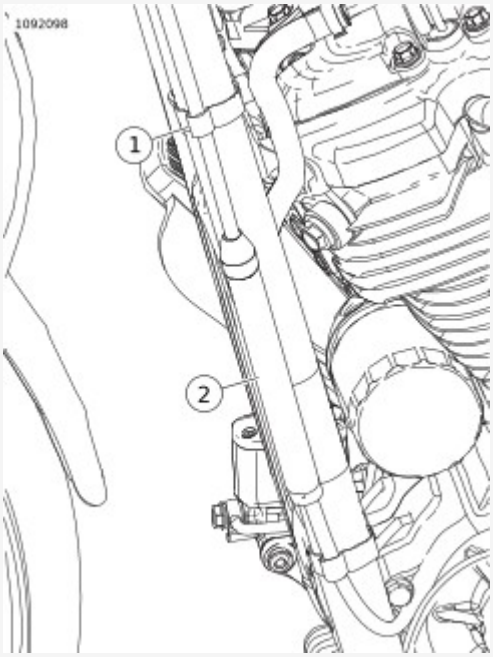

View interactive image

1	Clip
2	Cover

Figure 1. Clutch Cover and Clip

3. See Figure 2. Identify upper clutch cable (1) and red lock button (2).

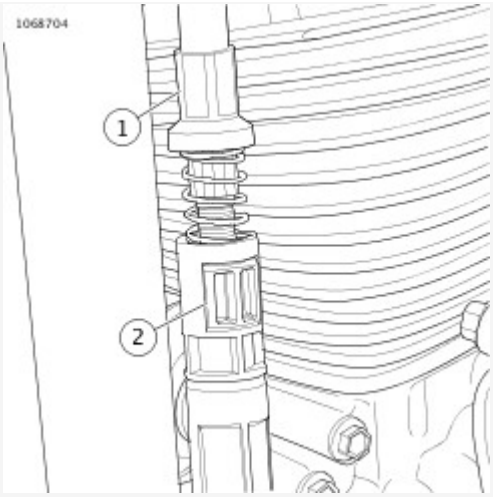

View interactive image

1	Upper clutch cable
2	Lock button

Figure 2. Lock Button

4.

NOTE
Inspect tabs on lock button (2). Replace if damaged.

See Figure 3. Unlock upper clutch cable (1).

a. Push tabs on lock button (2) slightly inboard and then down to disengage.

5. Fully collapse cable (spring compressed) and push button in. This releases cable tension.

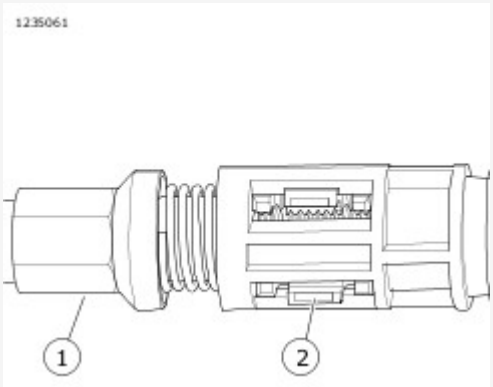

View interactive image

1	Upper clutch cable
2	Lock button

Figure 3. Compressed Upper Clutch Cable

6.

NOTE

Perform clutch adjustment with motorcycle at room temperature. Clearance at adjuster screw increases as powertrain temperature increases. If adjustment is made when hot, clearance at pushrod bearing could be insufficient when cold. Clutch slippage could occur.

Adjust clearance at hub.

a. Remove clutch inspection cover from primary chaincase cover. See **Maintenance → REPLACE PRIMARY CHAINCASE LUBRICANT**.

b. See **Figure 4**. Loosen jamnut (1) on clutch adjuster screw. Turn adjuster screw (2) inward (clockwise) until lightly seated.

c. Squeeze clutch lever to maximum limit three times to set release mechanism.

d. Back out adjuster screw one-half to one full turn. While holding adjuster screw, tighten jamnut.
Torque: 8.1–13.6 N·m (72–120 **in-lbs**) *Clutch hub jamnut*

e. Secure clutch inspection cover. Tighten in sequence. See **Maintenance → REPLACE PRIMARY CHAINCASE LUBRICANT**.

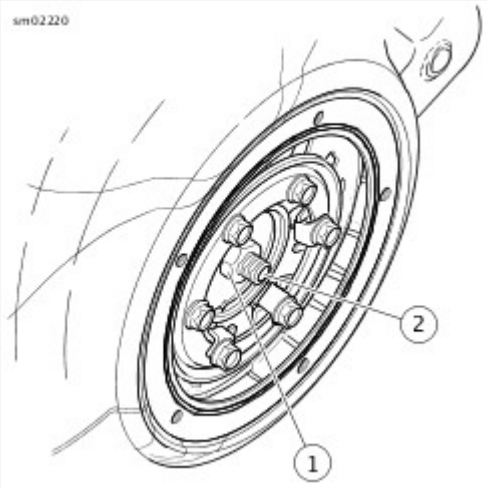

View interactive image

1	Jam nut
2	Clutch adjuster screw

Figure 4. Clutch Adjuster Screw

7. See **Figure 5**. Ensure clutch lever is in full open position and that ferrule (1) is correctly seated in housing.

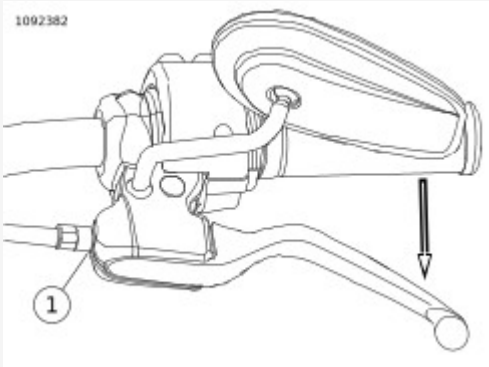

View interactive image

1	Ferrule

Figure 5. Clutch Lever

8. See Figure 3. Disengage lock button (2) allowing upper clutch cable spring (1) to set free-play at clutch lever.
9.

NOTE
Inspect lock button (2). Replace if damaged.

Push in lock button (2).

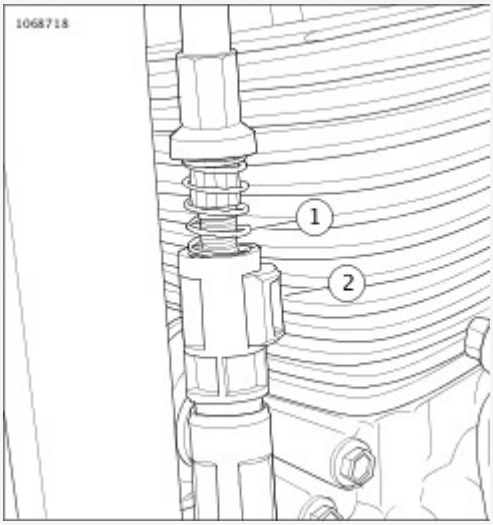

View interactive image

1	Upper clutch cable spring
2	Lock button

Figure 6. Secure Lock Button

10. See Figure 7. Spring force is sufficient to ensure correct system freeplay.
    a. Check free-play (4) at clutch lever.
    b. If free-play is not to specification, check for proper clutch cable routing.
11. Check clutch operation.
12. See Figure 1. Slide cover down and reinstall spring clip (1).

Clutch Cable Only Check

1. Rotate front wheel straight ahead.
2. See Figure 7. Check free play.
    a. Pull clutch cable ferrule (2) away from clutch lever bracket (3).
    b. Check free play (4) dimension. Refer to Table 1.
    c. Adjust clutch. See Adjustment in this section.

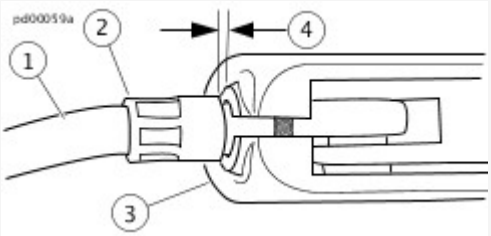

View interactive image

1	Clutch cable
2	Cable ferrule
3	Clutch lever bracket
4	Free play

Figure 7. Clutch Cable Free Play

Table 1. Clutch Cable Free Play

ITEM	DIMENSION
Free play dimension	1/16–⅛ in (1.6–3.2 mm)

For this scheduled maintenance procedure, see **Chassis → FRONT FORK**.

1. Support motorcycle upright with front wheel suspended and vehicle level.
2. Remove all accessory weight from front of motorcycle.
   a. **FLHC, FLHCS:** Remove windshield.
3. Move forks from stop to stop to check for smooth operation. Rough operation indicates damaged bearings. See **Chassis → STEERING HEAD/FORK STEM AND BRACKET ASSEMBLY**.
4. Grasping both forks near the front axle, pull forks to front then push to rear.
   a. If a clunk is felt, perform **Adjust** in **ADJUSTMENT CHECK**.

Measure

1. Perform test.
   a. Move handlebars from left to right steering stops three times, ending at full left steering stop.
   b. Using a 0-25 lbs pull force scale with a peak hold feature, pull from the inside diameter of the front axle until the front end is straight.

   NOTE

   See Figure 1. While pulling, keep scale parallel to front tire and perpendicular to fork leg.

   Be sure to pull slowly without tugging the scale.

   c. Repeat steps a and b until the peak force value becomes consistent.
2. If peak force value is not within specification, adjust the fork stem bolt. Refer to Table 1.

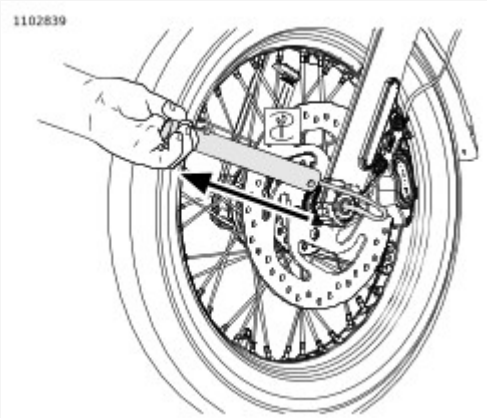

View interactive image

Figure 1. Pull Force Orientation

Table 1. Pull Force Specifications

MODEL	MINIMUM	MAXIMUM
FLDE, FLHC, FLHCS, FLHCS, FLSB, FLSL, FXBB, FXLR	2	16
FLFB, FLFBS, FXBR, FXBRS, FXBRS	8	21
FXFB, FXFBS	1	13
FXDRS	13	17

Adjust

1. **FLDE, FLHC, FLHCS:** Remove rear headlight nacelle panels. See **Chassis → HEADLAMP NACELLE**
2. **FXBB, FXBR, FXBRS, FXDRS:** Remove handlebars. See **Chassis → HANDLEBAR**
3. See **Figure 2**. Loosen fork stem pinch bolt (2).
4. Loosen upper fork bracket pinch bolts (3).
5. Adjust fork stem bolt (1).
   a. If pull force dimension is more than the maximum, loosen the fork stem bolt.
   b. If pull force dimension is less than the minimum, tighten the fork stem bolt.
6. Tighten fork stem pinch bolt (2).
   Torque: 21.7–27.1 N·m (16–20 ft-lbs) *Fork stem pinch bolt - All but FXDRS*
   Torque: 38–43.4 N·m (28–32 ft-lbs) *Fork stem pinch bolt - FXDRS*
7. Tighten upper fork bracket pinch bolts (3).
   Torque: 21.7–27.1 N·m (16–20 ft-lbs) *Lower fork bracket pinch bolt*
8. **FXBB, FXBR, FXBRS, FXDRS:** Install handlebars. See **Chassis → HANDLEBAR**
9. **FLDE, FLHC, FLHCS:** Install rear headlight nacelle panels. See **Chassis → HEADLAMP NACELLE**
10. Repeat measure and adjust as needed.

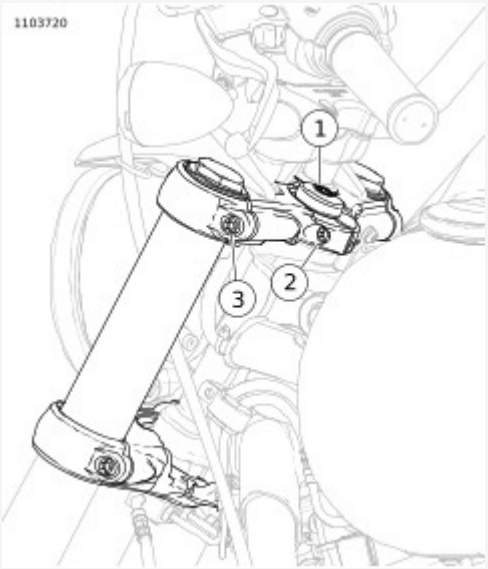

View interactive image

1	Fork stem bolt
2	Fork stem pinch bolt
3	Upper fork bracket pinch bolt (2)

Figure 2. Pull Force Adjustment Points (Typical)

1. Disassemble the steering head assembly and lubricate the tapered roller bearings with SPECIAL PURPOSE GREASE. See **Chassis → STEERING HEAD/FORK STEM AND BRACKET ASSEMBLY**

1. Lower motorcycle.
2. Replace all items removed in prepare.

For this scheduled maintenance procedure, see **Fuel and Exhaust → FUEL LINE**.

For this scheduled maintenance procedure, see **Chassis → JIFFY STAND**.

General

WARNING

Never bend belt forward into a loop smaller than the drive sprocket diameter. Never bend belt into a reverse loop. Over bending can damage belt resulting in premature failure, which could cause loss of control and death or serious injury. (00339a)

In the case of stone damage to belt, inspect the sprockets for damage and replace as required. If replacing belt, always replace both transmission and rear sprockets.

Cleaning

Keep dirt, grease, oil, and debris off the drive belt and sprockets. Clean the belt with a rag slightly dampened with a light cleaning agent.

Sprockets

1. See Figure 1. Inspect each tooth (1) of rear sprocket for:
   a. Major tooth damage
   b. Large chrome chips with sharp edges
   c. Gouges caused by hard objects
   d. Excessive loss of chrome plating (see next step)
2. Check for worn chrome plating. Drag a sharp object across the bottom of a groove (2) using medium pressure.
   a. If sharp object slides across groove without digging in or leaving a visible mark, chrome plating is still good.
   b. If sharp object digs in and leaves a visible mark, it is cutting the bare aluminum. The chrome plating is worn.
3. Replace rear sprocket if major tooth damage or loss of chrome exists.

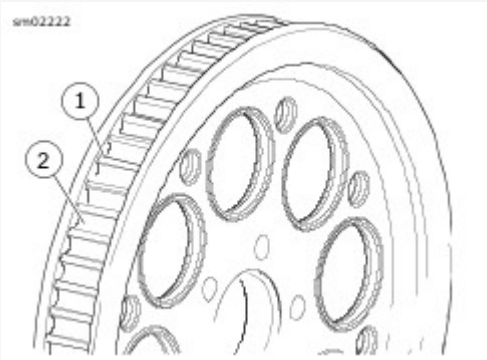

View interactive image

1	Tooth
2	Groove

Figure 1. Rear Sprocket

Drive Belt

See Figure 2 and Refer to Table 1. Inspect drive belt for:

- Cuts or unusual wear patterns
- Outside bevel wear (8). Some beveling is common, but it indicates that sprockets are misaligned
- Outside ribbed surface for signs of stone damage (7). If cracks or other damage exists near edge of belt, replace belt immediately. Damage to center of belt eventually requires belt replacement. However, when cracks extend to edge of belt, failure is imminent
- Inside (toothed portion) of belt for exposed tensile cords (normally covered by nylon layer and polyethylene layer). Replace belt and transmission sprocket
- Signs of puncture or cracking at the base of the belt teeth. Replace belt if either condition exists
- Replace belt if conditions 2, 3, 6 or 7 (on edge of belt) exist

NOTE

Condition 1 may develop into 2 or 3 over time. Condition 1 is not grounds for replacing the belt, but it should be watched closely before condition 2 develops which will require belt replacement.

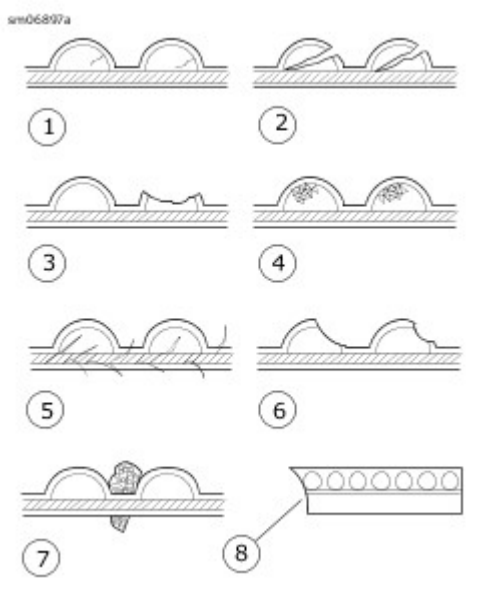

View interactive image

Figure 2. Drive Belt Wear Patterns

Table 1.

NO.	CONDITION	REQUIRED ACTION
1	Internal tooth cracks (hairline)	OK to run, but monitor condition.
2	External tooth cracks	Replace belt.
3	Missing teeth	Replace belt.
4	Chipping (not serious)	OK to run, but monitor condition.
5	Fuzzy edge cord	OK to run, but monitor condition.

6	Hook wear	Replace belt and sprocket.
7	Stone damage	Replace belt if damage is on the edge.
8	Bevel wear (outboard edge only)	OK to run, but monitor condition.

Special Tools

Description	Part Number	Qty.
BELT TENSION GAUGE	HD-35381-A	1

NOTE

Always use BELT TENSION GAUGE (Part Number:HD-35381-A) to measure belt deflection. Failure to use tension gauge may cause under-tensioned belts. Loose belts can fail due to "ratcheting" (jumping a tooth) which causes tensile cord crimping and breakage.

Check deflection:

- With transmission in neutral.
- With motorcycle at ambient temperature.
- With motorcycle upright or on jiffy stand with rear wheel on the ground.
- With the vehicle unladen: no rider, no luggage and empty saddlebags.

WARNING

To prevent accidental vehicle start-up, which could cause death or serious injury, remove main fuse before proceeding. (00251b)

1. Disarm security system. Remove main fuse. See Electrical → POWER DISCONNECT.
2. Shift transmission to neutral.

NOTE

When adjusting a **new** belt, rotate rear wheel a few revolutions prior to setting the tension.

3. See Figure 1. Measure belt deflection using BELT TENSION GAUGE (Part Number:HD-35381-A):
   a. Slide O-ring (4) to zero mark (3).
   b. **Models equipped with belt deflection window:** Fit belt cradle (2) against bottom of drive belt in line with belt deflection window.
   c. **All other models:** Fit belt cradle (2) against bottom of drive belt halfway between drive pulleys.
   d. Press upward on knob (6) until O-ring slides down to 4.54 kg (10 lb) mark (5) and hold steady.
4. Measure belt deflection:
   a. **Models equipped with belt deflection window:** See Figure 2. Measure belt deflection as viewed through belt deflection viewing window while holding gauge steady. Each deflection graduation is approximately 1.6 mm (1/16 in).
   b. **All other models:** See Figure 3. Measure amount of deflection (4) while holding gauge steady.

NOTE

Service belt tension specification is for belts with more than 1,600 km (1000 mi). Set belt to new belt tension specification if the belt has less than 1,600 km (1000 mi).

5. Compare with specifications. Refer to Table 1. If not within specifications, see a Harley-Davidson dealer.
6. Install main fuse.

Table 1. Drive Belt Deflection

MODEL	DEFLECTION (1)

	IN	MM
Service belt tension	1/2-9/16	12.7-14.2
New belt tension	3/16-1/2	4.7-12.7

(1) Deflection measured at 10 lb (4.5 kg) tension.

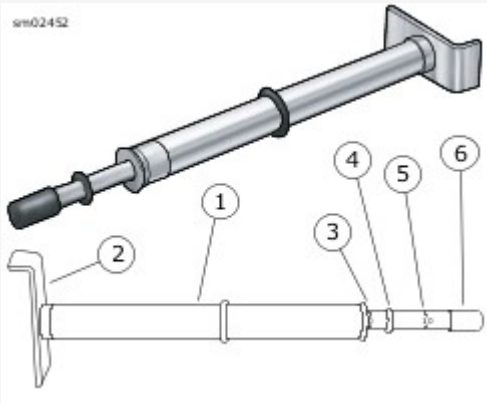

View interactive image

1	Belt tension gauge
2	Belt cradle
3	0 lb (0 kg) mark
4	O-ring
5	10 lb (4.5 kg) mark
6	Knob

Figure 1. Belt Tension Gauge

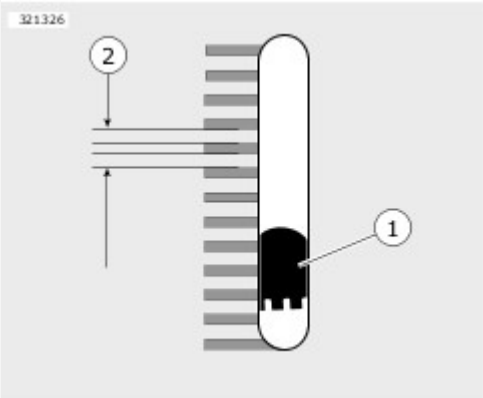

View interactive image

1	Drive belt

2	Deflection graduations (Approx. 1/16th each)

Figure 2. Belt Deflection Window

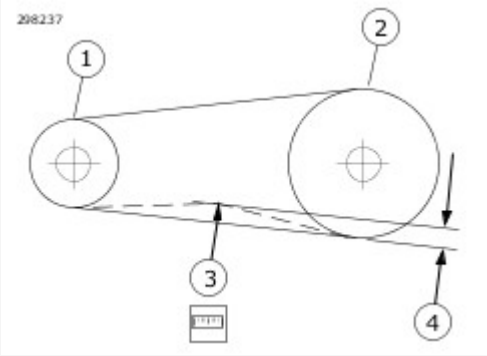

View interactive image

1	Transmission sprocket
2	Rear wheel sprocket
3	10 lb (4.5 kg) of force
4	Amount of deflection

Figure 3. Checking Belt Deflection

Special Tools

Description	Part Number	Qty.
AXLE NUT TORQUE ADAPTER	HD-47925	1

Screw Style:

1. See Figure 1. Loosen rear axle nut (2).
2. Adjust drive belt deflection.
   a. **Screw style:** Turn axle adjusters (3) an equal amount.
   b. Keep wheel aligned until specification is achieved.
3. **NOTE**

   See Figure 2. To tighten rear axle nut without removing exhaust, use AXLE NUT TORQUE ADAPTER (Part Number:HD-47925).

   Tighten axle nut (2).
   Torque: 128.8–142.4 N·m (95–105 ft-lbs) *Axle nut, rear, all but FXDRS*
4. Install E-clip (1).
5. Verify rear wheel alignment. See Chassis → WHEEL ALIGNMENT.
6. Verify drive belt deflection.

   WARNING

   Check wheel bearing end play after tightening axle nut to specified torque. Excessive end play can adversely affect stability and handling and can cause loss of control, which could result in death or serious injury. (00285b)

7. Check wheel bearing end play. See Chassis → SEALED WHEEL BEARINGS.

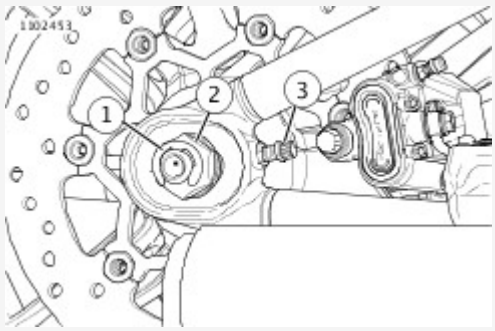

View interactive image

1	E-clip
2	Axle nut
3	Axle adjuster

Figure 1. Axle Adjuster: Screw

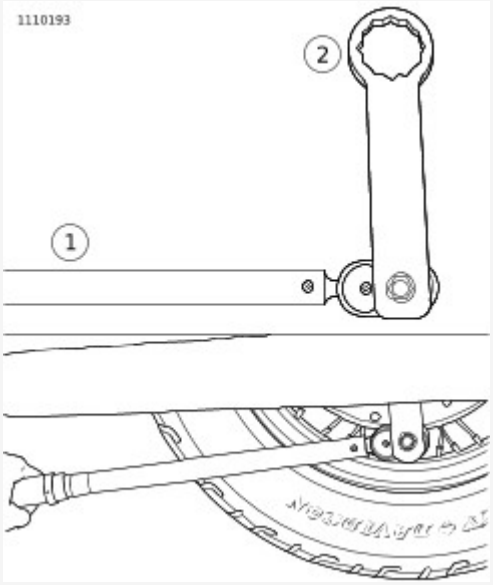

View interactive image

1	Torque wrench
2	Axle nut torque adapter (HD-47925)

Figure 2. Install Tool Perpendicular to Torque Wrench

Cam Style:

1. Raise rear wheel. See **Maintenance → GENERAL → Secure the Motorcycle for Service**.
2. See **Figure 3**. Loosen rear axle nut (2).
3. **NOTE**

   Left side cam is keyed to axle. It is normal for a small amount of play to be present between the axle and the left cam.

   Adjust drive belt deflection.

   a. Install rear axle nut until it makes contact with the right side cam, then loosen rear axle nut 2 flats.

   b. Tighten left side of rear axle.

Drive belt first pre-load -

Torque: 33.9 N·m (25 ft-lbs)
FXDRS

c. Loosen left side of rear axle 1 flat.

d. Tighten left side of rear axle and hold pressure.
Torque: 4.5–5.6 N·m (40–50 **in-lbs**) *Service - drive belt final pre-load - FXDRS*
Torque: 10.8–14.9 N·m (96–132 **in-lbs**) *New - drive belt final pre-load - FXDRS*

> **NOTE**
>
> Verify that both cams are making contact with the dowel pins before tightening rear axle nut.

e. Tighten rear axle nut (2).
Torque: 149.1–162.7 N·m (110–120 ft-lbs) *Axle nut, rear, FXDRS*

4. Install E-clip (1) if removed.
5. Verify drive belt deflection.

> **WARNING**
>
> Check wheel bearing end play after tightening axle nut to specified torque. Excessive end play can adversely affect stability and handling and can cause loss of control, which could result in death or serious injury. (00285b)

6. Check wheel bearing end play. See **Chassis → SEALED WHEEL BEARINGS**.

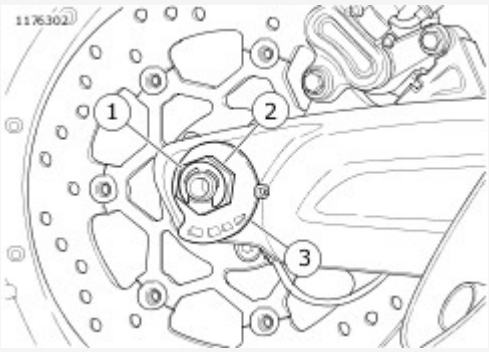

View interactive image

1	E-clip
2	Axle nut
3	Axle adjuster

Figure 3. Axle Adjuster: Cam

Special Tools

Description	Part Number	Qty.
SPANNER WRENCH KIT	14900102	1

Calculate Preload Setting

WARNING

Do not exceed the motorcycle's Gross Vehicle Weight Rating (GVWR) or Gross Axle Weight Rating (GAWR). Exceeding these weight ratings can lead to component failure and adversely affect stability, handling and performance, which could result in death or serious injury. (00016f)

Adjust suspension to suit load conditions, riding style and personal comfort. Increase preload to accommodate the total load. Reduce the preload if carrying less weight. Do not exceed maximum GVWR or GAWR when loading.

NOTE

To determine the motorcycle configuration check the model character stamped on the VIN. See Chassis → VEHICLE IDENTIFICATION NUMBER (VIN) → Vehicle Identification Number (VIN).

1. Add the weight of the rider to the total weight of the passenger and/or cargo to Identify the proper preload setting.
   a. **FLDE:** Refer to Table 1.
   b. **FLFB:** Refer to Table 2.
   c. **FLHC:** Refer to Table 3.
   d. **FLSB:** Refer to Table 4.
   e. **FLSL:** Refer to Table 5.
   f. **FXBB, FXLR:** Refer to Table 6.
   g. **FXBR:** Refer to Table 7.
   h. **FXFB:** Refer to Table 8.
   i. **FXDRS:** Refer to Table 9.

Table 1. Suspension Preload Table: FLDE

		ADDITIONAL WEIGHT OF PASSENGER, CARGO AND ACCESSORIES										
		LB	0	20	40	60	80	100	120	140	160	180
		KG	0	9	18	27	36	45	54	64	73	82
RIDER WEIGHT												
LB	KG		Preload Setting									
160	73		0	0.5	1	1.5	2	2.5	2.5	3	3.5	4
180	82		0.5	1	1.5	1.5	2	2.5	3	3.5	4	4.5
200	91		0.5	1	1.5	2	2.5	3	3.5	4	4.5	4.5
220	100		1	1.5	2	2.5	3	3.5	3.5	4	4.5	5

240	109		1.5	2	2.5	2.5	3	3.5	4	4.5	5	5
260	118		1.5	2	2.5	3	3.5	4	4.5	5	5	NA
280	127		2	2.5	3	3.5	4	4.5	NA	NA	NA	NA
300	136		2.5	3	3.5	NA	NA	NA	NA	NA	NA	NA

Table 2. Suspension Preload Table: FLFB

		ADDITIONAL WEIGHT OF PASSENGER, CARGO AND ACCESSORIES										
		LB	0	20	40	60	80	100	120	140	160	180
		KG	0	9	18	27	36	45	54	64	73	82
RIDER WEIGHT												
LB	KG		Preload Setting									
160	73		0	0.5	1	1.5	2	2.5	3	3.5	4	4
180	82		0.5	1	1.5	2	2.5	3	3	3.5	4	4.5
200	91		1	1.5	2	2	2.5	3	3.5	4	4.5	5
220	100		1	1.5	2	2.5	3	3.5	4	4.5	5	5
240	109		1.5	2	2.5	3	3.5	4	4	4.5	5	5
260	118		2	2.5	3	3	3.5	4	4.5	5	5	5
280	127		2	2.5	3	3.5	4	4.5	5	5	5	NA
300	136		2.5	3	3.5	4	4.5	5	NA	NA	NA	NA

Table 3. Suspension Preload Table: FLHC

		ADDITIONAL WEIGHT OF PASSENGER, CARGO AND ACCESSORIES										
		LB	0	20	40	60	80	100	120	140	160	180
		KG	0	9	18	27	36	45	54	64	73	82
RIDER WEIGHT												
LB	KG		Preload Setting									
160	73		0.5	1	1.5	2	2.5	3	3.5	4	4.5	5
180	82		1	1.5	2	2.5	3	3	3.5	4	4.5	5
200	91		1	1.5	2	2.5	3	3.5	4	4.5	5	5
220	100		1.5	2	2.5	3	3.5	4	4.5	5	5	5
240	109		2	2.5	3	3.5	4	4.5	4.5	5	5	5

260	118		2	2.5	3	3.5	4	4.5	5	5	5	NA
280	127		2.5	3	3.5	4	NA	NA	NA	NA	NA	NA
300	136		NA	NA	NA	NA	NA	NA	NA	NA	NA	NA

Table 4. Suspension Preload Table: FLSB

		ADDITIONAL WEIGHT OF PASSENGER, CARGO AND ACCESSORIES										
		LB	0	20	40	60	80	100	120	140	160	180
		KG	0	9	18	27	36	45	54	64	73	82
RIDER WEIGHT												
LB	KG		Preload Setting									
160	73		1	1.5	2	2.5	3	3.5	4	4.5	5	5
180	82		1	1.5	2	2.5	3	3.5	4	4.5	5	5
200	91		1.5	2	2.5	3	3.5	4	4.5	5	5	5
220	100		2	2.5	3	3.5	4	4.5	5	5	5	5
240	109		2.5	3	3.5	4	4.5	5	5	5	5	5
260	118		2.5	3	3.5	4	4.5	5	5	5	5	5
280	127		3	3.5	4	4.5	5	5	5	5	5	5
300	136		3.5	4	4.5	5	5	5	5	5	5	NA

Table 5. Suspension Preload Table: FLSL

		ADDITIONAL WEIGHT OF PASSENGER, CARGO AND ACCESSORIES										
		LB	0	20	40	60	80	100	120	140	160	180
		KG	0	9	18	27	36	45	54	64	73	82
RIDER WEIGHT												
LB	KG		Preload Setting									
160	73		1	2	3	4	5	6	7	7	7	7
180	82		2	2	3	4	5	6	7	7	7	7
200	91		2	3	4	5	6	7	7	7	7	7
220	100		3	4	5	6	7	7	7	7	7	7
240	109		4	5	5	6	7	7	7	7	7	7

260	118		4	5	6	7	7	7	7	7	7	7
280	127		5	6	7	7	7	7	7	7	7	7
300	136		6	7	7	7	7	7	7	NA	NA	NA

Table 6. Suspension Preload Table: FXBB, FXLR

		ADDITIONAL WEIGHT OF PASSENGER, CARGO AND ACCESSORIES										
		LB	0	20	40	60	80	100	120	140	160	180
		KG	0	9	18	27	36	45	54	64	73	82
RIDER WEIGHT												
LB	KG		Preload Setting									
160	73		1	1	2	3	4	5	6	7	7	7
180	82		1	2	3	4	5	6	6	7	7	7
200	91		2	3	4	4	5	6	7	7	7	7
220	100		2	3	4	5	6	7	7	7	7	7
240	109		3	4	5	6	7	7	7	7	7	7
260	118		4	5	5	6	7	7	7	7	7	7
280	127		4	5	6	7	7	7	7	7	7	7
300	136		5	6	7	7	7	7	7	7	7	7

Table 7. Suspension Preload Table: FXBR

		ADDITIONAL WEIGHT OF PASSENGER, CARGO AND ACCESSORIES										
		LB	0	20	40	60	80	100	120	140	160	180
		KG	0	9	18	27	36	45	54	64	73	82
RIDER WEIGHT												
LB	KG		Preload Setting									
160	73		0	0	0.5	1	1.5	2	2.5	3	3.5	4
180	82		0	0.5	1	1.5	2	2.5	3	3	3.5	4
200	91		0.5	1	1	1.5	2	2.5	3	3.5	4	4.5
220	100		0.5	1	1.5	2	2.5	3	3.5	4	4.5	5
240	109		1	1.5	2	2.5	3	3.5	4	4.5	4.5	5
260	118		1.5	2	2.5	3	3	3.5	4	4.5	5	5

280	127		1.5	2	2.5	3	3.5	4	4.5	5	5	5
300	136		2	2.5	3	3.5	4	4.5	5	5	5	5

Table 8. Suspension Preload Table: FXFB

		ADDITIONAL WEIGHT OF PASSENGER, CARGO AND ACCESSORIES										
		LB	0	20	40	60	80	100	120	140	160	180
		KG	0	9	18	27	36	45	54	64	73	82
RIDER WEIGHT												
LB	KG		Preload Setting									
160	73		0	0	0.5	1	1.5	2	2.5	3	3.5	4
180	82		0	0.5	1	1.5	2	2.5	3	3.5	4	4.5
200	91		0	0.5	1	1.5	2	2.5	3	3.5	4	4.5
220	100		0.5	1	1.5	2	2.5	3	3.5	4	4.5	NA
240	109		1	1.5	2	2.5	3	3.5	4	NA	NA	NA
260	118		1.5	2	2.5	3	NA	NA	NA	NA	NA	NA
280	127		1.5	2	NA	NA	NA	NA	NA	NA	NA	NA
300	136		NA	NA	NA	NA	NA	NA	NA	NA	NA	NA

Table 9. Suspension Preload Table: FXDRS

		ADDITIONAL WEIGHT OF PASSENGER, CARGO AND ACCESSORIES										
		LB	0	20	40	60	80	100	120	140	160	180
		KG	0	9	18	27	36	45	54	64	73	82
RIDER WEIGHT												
LB	KG		Preload Setting									
160	73		0.5	1	2	2.5	3	3.5	4	5	5	5
180	82		1	1.5	2	3	3.5	4	4.5	5	5	5
200	91		1.5	2	2.5	3.5	4	4.5	5	5	5	5
220	100		2	2.5	3	4	4.5	5	5	5	5	5
240	109		2.5	3	3.5	4.5	5	5	5	5	5	5
260	118		3	3.5	4	5	5	5	5	5	5	5

280	127		3.5	4	4.5	5	5	5	5	5	5	5
300	136		4	4.5	5	5	5	5	5	5	5	5

Adjustment

NOTE

Adjust the shock with the motorcycle resting on the jiffy stand.

1. **Cam style:** See Figure 1.
   a. Remove seat.

   NOTE

   The provided spanner wrench is to be assembled before use.

   b. Insert the tang of the SPANNER WRENCH KIT (Part Number:14900102) in the slots in the rear shock, turn the cam until the indicator (1) points to the appropriate preload setting (2).
2. **Hydraulic external:** See Figure 2.
   a. Rotate the adjustment knob clockwise to increase preload setting, or counterclockwise to decrease preload setting until the indicator knob shows the appropriate preload setting on the scale.
3. **Hydraulic under seat:** See Figure 3.
   a. Remove seat.

   NOTE

   The provided spanner wrench is to be assembled before use.

   b. Using the socket end of the SPANNER WRENCH KIT (Part Number:14900102), rotate adjustment screw clockwise to increase preload setting, or counterclockwise to decrease preload setting until the indicator shows the appropriate preload setting.

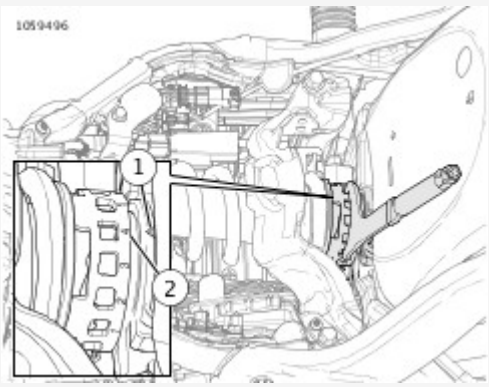

View interactive image

1	Indicator
2	Preload setting

Figure 1. Preload Adjustment Cam

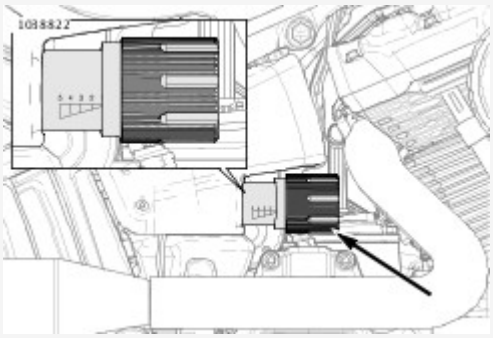

View interactive image

Figure 2. Preload Adjustment Knob

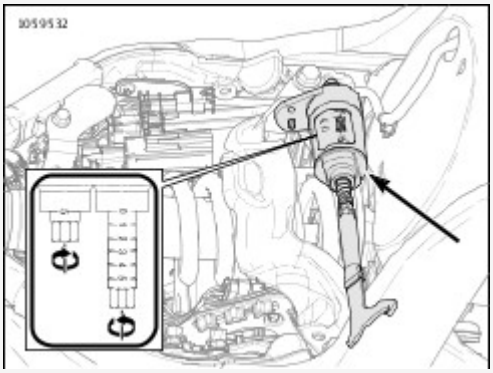

View interactive image

Figure 3. Preload Adjustment Screw

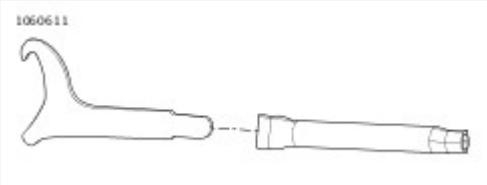

View interactive image

Figure 4. Spanner Wrench Kit

1. Check exhaust system for obvious signs of leakage such as carbon tracks and marks at pipe joints.
    a. Check for loose or missing fasteners.
    b. Check for cracked pipe clamps or brackets.
    c. Check for loose or cracked exhaust shields.
2. Check exhaust system for audible signs of leakage.
    a. Start engine.
    b. Cover end of muffler with clean, dry shop towel.
    c. Listen for signs of exhaust leakage.
3. Correct any detected leaks.
    a. See **Fuel and Exhaust → EXHAUST SYSTEM**. Disassemble exhaust system.
    b. Clean all mating surfaces.
    c. Repair or replace damaged components.
    d. Assemble exhaust system.

NOTE

If leak continues, disassemble and apply PERMATEX ULTRA COPPER or LOCTITE 5920 FLANGE SEALANT or equivalent oxygen sensor/catalyst-safe alternative to mating surfaces.

REMOVE

1. See Figure 1 or Figure 2. Remove air filter cover.
    a. Remove screws (1).
    b. Remove cover (2).
2. Remove filter element.
    a. Remove screws (3).
    b. Remove filter element (4) while pulling breather tube (5) from element.

INSTALL

1. See Figure 1 or Figure 2. Install filter element.
    a. Install breather tube (5) into filter element (4).
    b. Install breather tube onto breather bolts.
    c. Install filter element.
    d. Install screws (3). Tighten.
    Torque: 5.4–8.1 N·m (48–72 **in-lbs**) *Air filter element screws, round cover*
2. Verify that rubber seal (6) is properly seated and not damaged.
3. Install air filter cover.
    a. Apply LOCTITE 243 MEDIUM STRENGTH THREADLOCKER AND SEALANT (blue) to threads of screw (1).
    b. Install cover (2).
    c. **Single screw cover:** Install screw (1). Tighten.
    Torque: 5.6–7.3 N·m (50–65 **in-lbs**) *Air filter cover screw, single screw cover*
    d. **Five-screw cover:** Install screws (1). Tighten in a star pattern.
    Torque: 5.4–8.1 N·m (48–72 **in-lbs**) *Air filter cover screws, five-screw cover*

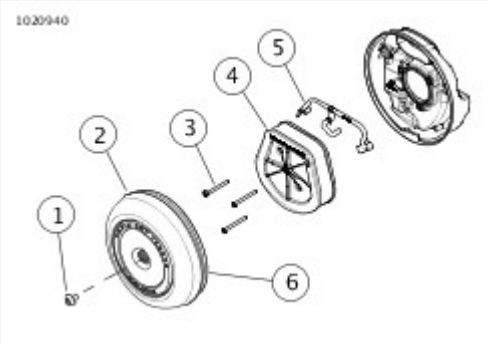

View interactive image

1	Screw
2	Cover

3	Screw (3)
4	Filter element
5	Breather tube assembly
6	Seal

Figure 1. Replace Air Filter Element, Single Screw Cover

1	Screw (5)
2	Cover
3	Screw (3)
4	Filter element
5	Breather tube assembly
6	Seal

Figure 2. Replace Air Filter Element, Five-Screw Cover

REMOVE

1. Remove rain sock (6), if equipped.
2. Remove air filter trim insert.
   a. Remove trim insert screws (1).
   b. Remove trim insert (2).
3. Remove cover and filter element.
   a. Remove screws (3).
   b. Remove cover (4).
   c. Clean and inspect the filter element. Replace if necessary.

INSTALL

1. See Unresolved graphic link. Install cover and filter element.
   a. Install filter element (5).
   b. Install cover (4).
   c. Install screws (3). Tighten.
      Torque: 5.7–6.8 N·m (50–60 **in-lbs**) *Air filter cover screws, oval cover*
2. Install air filter trim insert.
   a. Install trim insert (2).
   b. Install trim insert screws (1). Tighten.
      Torque: 3–3.6 N·m (27–32 **in-lbs**) *Air filter trim insert screws*
3. Install rain sock (6), if equipped.

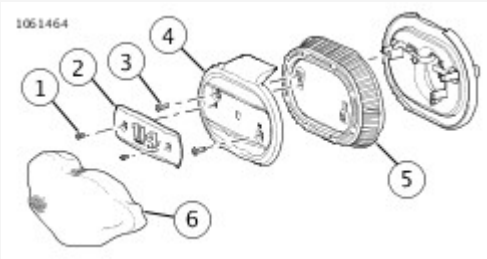

View interactive image

1	Screw (2)
2	Trim insert
3	Screw (2)
4	Cover
5	Filter element
6	Rain sock

Figure 1. Air Cleaner: Oval

REMOVE

1. See Figure 1. Remove air filter cover.
   a. Remove screws (1).
   b. Remove cover (2).
2. Remove filter element.
   a. Remove screws (4).
   b. Remove filter element (6) and seal (5). Discard seal.

INSTALL

1. See Figure 1. Install filter element.
   a. Install **new** seal (5) on filter element (6).
   b. Install filter element.
   c. Install screws (4). Tighten.
      Torque: 5.4–8.1 N·m (48–72 **in-lbs**) *Air filter element screw, square*
2. Install air cleaner cover.
   a. Install cover (2).
   b. Install screws (1). Tighten.
      Torque: 5.4–8.1 N·m (48–72 **in-lbs**) *Air filter cover screw, square*

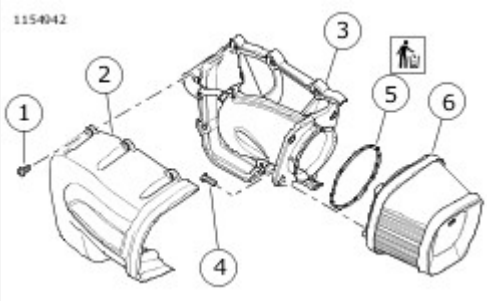

View interactive image

1	Screw (6)
2	Cover
3	Backplate assembly
4	Screw (4)
5	Seal
6	Filter element

Figure 1. Air Cleaner: Square

1. Remove breather tube from breather bolts.
2. Inspect the breather tube and fittings for damage.

NOTE

- Do not strike filter element on a hard surface to dislodge dirt.
- Do not use air cleaner filter oil on the Harley-Davidson paper/wire mesh or synthetic air filter element.

WARNING

Do not use gasoline or solvents to clean filter element. Flammable cleaning agents can cause an intake system fire, which could result in death or serious injury. (00101a)

3. Clean filter element.
   a. Wash the filter element and breather tubes in lukewarm water with a mild detergent.
   b. **Synthetic element:** Rinse filter element with clean water. The filter element is sufficiently clean when water running from the filter element appears clear.
   c. Allow filter element to air dry or use low-pressure compressed air from the inside.
   d. **Paper/wire mesh element:** Hold the filter element up to a strong light source. The element is sufficiently clean when light is uniformly visible through the media.
   e. Replace the filter element if damaged or if filter media cannot be adequately cleaned.

1. Remove seat. See **Chassis → SEAT**.
2. Remove right side cover. See **Chassis → RIGHT SIDE COVER**.
3. Disconnect negative battery cable. See **Electrical → POWER DISCONNECT**.

1. See Figure 1. Remove close-out cover (3).
2. Open clip (1) and position wiring harnesses (2) out-of-way.

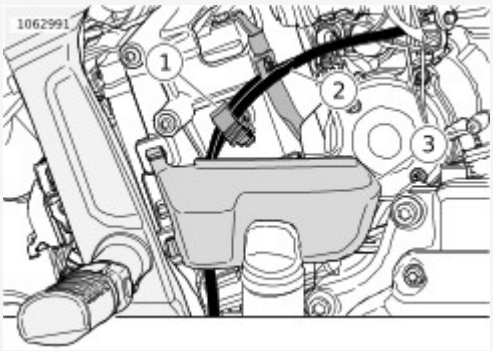

View interactive image

1	Clip
2	Wiring harnesses
3	Close-out cover

Figure 1. Close-Out Cover and Clip (Typical)

3. See Figure 2. Disconnect WSS (Wheel speed sensor) connector (1).
4. Remove WSS wiring from battery strap.
   a. Remove WSS wiring (3) from battery strap fingers (4).
   b. Slide WSS connector forward and remove from battery strap.
5. Unlock retaining clip (2).

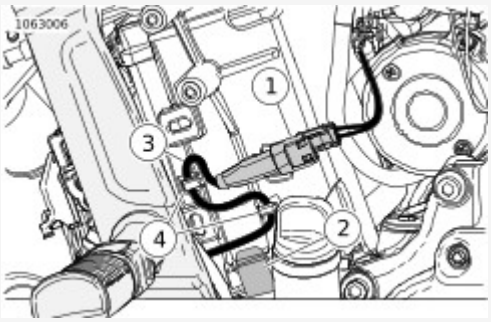

View interactive image

1	WSS connector
2	Retaining clip
3	WSS wiring

4	Battery strap fingers

Figure 2. WSS and Wiring

6. See Figure 3. Remove battery strap (3).
   a. Disconnect back tab (2) from battery strap to battery tray (4).
   b. Disconnect front left tab (1) from battery strap to battery tray.
   c. Remove battery strap.
7. Disconnect positive battery cable.
8. **If needed:** Remove engine oil dipstick.

> **NOTE**
>
> If dipstick is removed, cover fill hole with tape or clean rag.

9. Retrieve nylon battery strap (8) from rear slot (7).
10. Remove battery.
    a. Pull up on nylon battery strap.
    b. Slide battery out and remove.

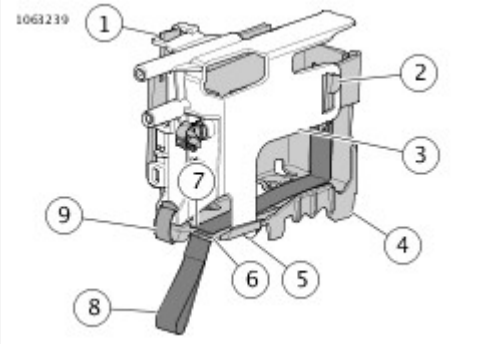

View interactive image

1	Back tab
2	Front left tab
3	Battery strap
4	Battery tray
5	Front tab
6	Front slot
7	Rear slot
8	Nylon battery strap
9	Retaining clip

Figure 3. Battery Strap and Tray: (Removed for clarity)

1. Install battery.

NOTE
■ Verify battery is under tab on ECM (Electronic control module) caddy, upper left corner on back side. ■ Verify nylon strap does not slide back when installing battery.

   a. See Maintenance → INSPECT BATTERY → Remove → Battery Strap and Tray: (Removed for clarity). Position nylon battery strap (8) in bottom of battery tray (4).
   b. Feed nylon battery strap into back slot (7) of the battery tray.
   c. Install battery into battery tray.
2. **If removed:** Install engine oil dipstick.
3. Connect positive battery cable. Tighten.
   Torque: 8.1–10.8 N·m (72–96 **in-lbs**) *Battery, positive cable, screw*
4. Install battery strap (3).
   a. Position battery strap.
   b. Connect front left tab (2) on battery strap to battery tray.

NOTE
Verify front tab (5) is align with battery tray when installing battery strap.

   c. Connect back tab (1) on battery strap to battery tray.
5. Lock retaining clip (9).
6. See Maintenance → INSPECT BATTERY → Remove → WSS and Wiring. Install WSS (Wheel speed sensor) wiring (3) to battery strap.
   a. Side WSS connector (1) rearward into battery strap.
   b. Install WSS wiring into battery strap fingers (4).
7. Connect WSS connector (1).
8. See Maintenance → INSPECT BATTERY → Remove → Close-Out Cover and Clip (Typical). Position wiring harnesses (2) into place and close clip (1).
9. Install close-out cover (3).

NOTE
Verify all close-out tabs are fully set into battery strap.

NOTE

Battery top must be clean and dry. Dirt and electrolyte on top of the battery causes self-discharge.

1. Clean battery top.
    a. Mix a solution of five teaspoons of baking soda (sodium bicarbonate) per liter or quart of water.
    b. Apply to battery top.
2. When the solution stops bubbling, rinse off battery with clean water.
3. Clean cable connectors and battery terminals with a wire brush or sandpaper. Remove any oxidation.
4. Inspect the battery terminal screws and cables for breakage, loose connections and corrosion.
5. Check the battery terminals for melting or damage.
6. Inspect the battery for discoloration, raised top or a warped or distorted case. Replace as necessary.
7. Inspect the battery case for cracks or leaks.

The voltage test provides a general indicator of battery condition. Check the voltage of the battery to verify that it is fully charged. Refer to **Table 1**.

1. If the open circuit (disconnected) voltage reading is below 12.6 V:
    a. Charge the battery.
    b. Check the voltage after the battery has set for at least one hour.
2. If the voltage reading is 12.7 V or above:
    a. Perform a battery diagnostic test. See the electrical diagnostic manual for the load test procedure.

Table 1. Voltage Test For Battery Charge Conditions

VOLTAGE (OCV)	STATE OF CHARGE
12.7 V	100%
12.6 V	75%
12.3 V	50%
12.0 V	25%
11.8 V	0%

See **Figure 1**. A battery is affected by self-discharge whether stored in or out of the vehicle. A battery that is stored in the vehicle is also affected by parasitic loads. A parasitic load is caused by things like diode leakage or maintaining computer memory with the vehicle turned off.

Batteries self-discharge at a faster rate at higher ambient temperatures. Store battery in a cool, dry place to reduce the self-discharge rate.

Charge the battery every two weeks if stored in the vehicle. Charge the battery once per month if removed the vehicle.

NOTE

Use a Harley-Davidson constant monitoring battery charger/tender to maintain battery charge for extended periods of time without risk of overcharging or boiling.

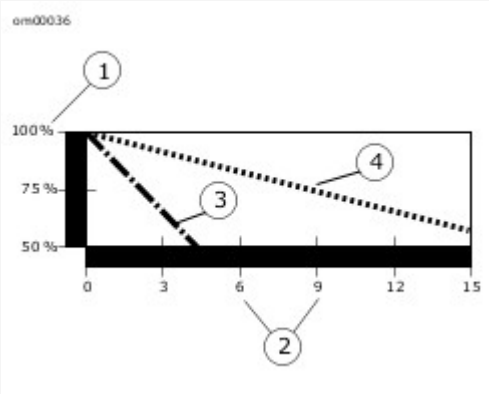

View interactive image

1	Capacity
2	Months of non-use
3	Measured at 40 °C (105 °F)
4	Measured at 25 °C (77 °F)

Figure 1. Effective Rate of Temperature on Battery Self-discharging Rate

1. Install negative battery cable. See **Electrical → POWER DISCONNECT**.
2. Install right side cover. See **Chassis → RIGHT SIDE COVER**.
3. Install seat. See **Chassis → SEAT**.

WARNING

Gasoline is extremely flammable and highly explosive. Keep gasoline away from ignition sources which could result in death or serious injury. See the Safety chapter. (00635c)

1. Remove seat. See **Chassis → SEAT**.
2. Purge fuel system. See **Fuel and Exhaust → PURGE FUEL LINE**.
3. Remove main fuse. See **Electrical → POWER DISCONNECT**.

WARNING

To prevent spray of fuel, purge system of high-pressure fuel before supply line is disconnected. Gasoline is extremely flammable and highly explosive, which could result in death or serious injury. (00275a)

4. Remove fuel tank. See **Fuel and Exhaust → FUEL TANK**.

WARNING

Disconnecting spark plug cable with engine running can result in electric shock and death or serious injury. (00464b)

1. See **Maintenance → CLEAN AND INSPECT SPARK PLUGS → Install → Spark Plug Location**. Remove spark plug cables from spark plugs.
2. Thoroughly clean around spark plug base.
3. Remove spark plugs.

Spark Plugs

NOTE

Discard plugs with eroded electrodes, heavy deposits or cracked insulators.

1. Inspect spark plugs. Compare plug deposits to Table 1.

Table 1. Spark Plug Deposit Analysis

DEPOSITS	POSSIBLE CAUSE
Wet, black and shiny	Worn pistons Worn piston rings Worn valves Worn valve guides Worn valve seals Weak battery Faulty ignition system
Dry, fluffy or sooty and black	Air-fuel mixture too rich
Light brown and glassy* (May be accompanied by cracks in the insulator or by electrode erosion.)	Air-fuel mixture too lean Hot running engine Valves not seating Improper ignition timing
White, gray or tan and powdery	Balanced combustion Clean off deposits at regular intervals.
* The glassy deposit on a spark plug may cause high speed misfiring.	

Spark Plug Cables

1. Inspect spark plug cables. Replace as necessary.
    a. Check for cracks or loose terminals.
    b. Check for loose fit on ignition coil and spark plugs.
2. Check cable boots/caps for cracks or tears. Replace as necessary.

NOTE

The spark plug gap is within specification when there is a slight drag on the gauge.

1. Verify proper gap before installing **new** or cleaned spark plugs.
   a. Use a wire-type feeler gauge within specification. Refer to [Table 1](#).
   b. Pass the wire gauge between the center and the outer electrodes.
   c. Adjust gap to within specification.
2. Verify that spark plug threads are clean and dry.
3. Install spark plugs. Tighten.
   Torque: 10–15 N·m (89–133 **in-lbs**) *Spark plug*
4. Install spark plug cables. See [Electrical → SPARK PLUG CABLES](#).

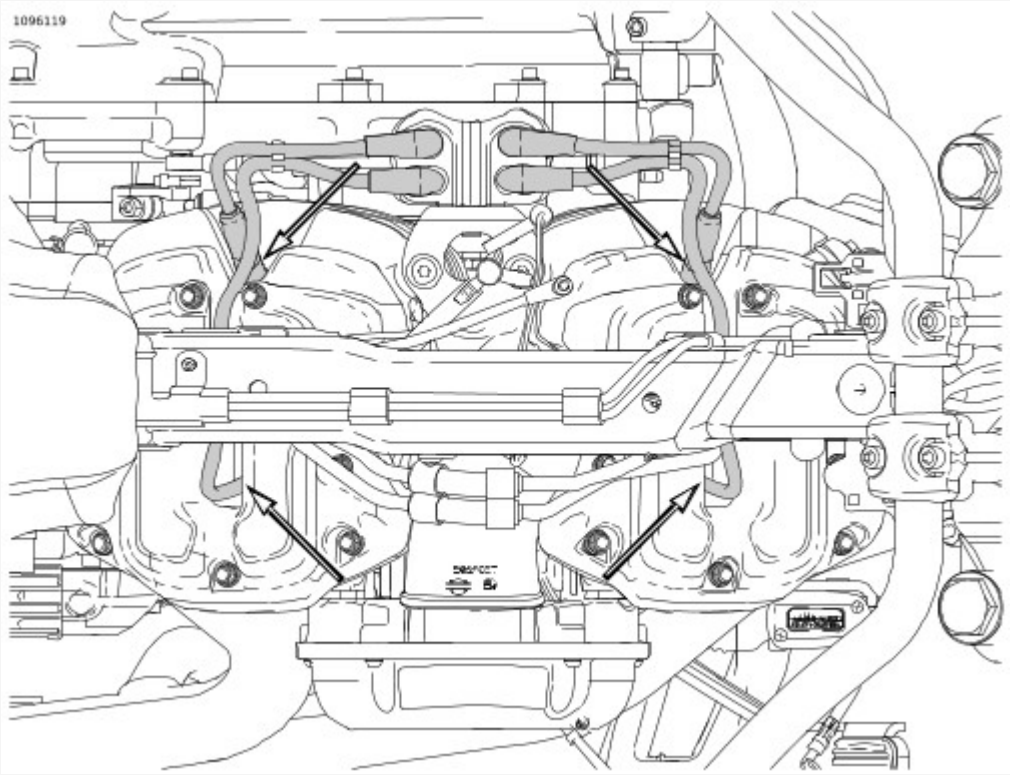

View interactive image

Figure 1. Spark Plug Location

Table 1. Spark Plug Gap

MODEL	MM	IN
All Models	0.8-0.9	0.031-0.035

1. Install fuel tank. See **Fuel and Exhaust → FUEL TANK**.
2. Install seat. See **Chassis → SEAT**.
3. Install main fuse. See **Electrical → POWER DISCONNECT**.

NOTE

Add at least 3.8 L (1 gal) of fuel to fuel tank before operating fuel pump.

4. Set OFF/RUN switch to RUN and check for leaks.

WARNING

Do not store motorcycle with gasoline in tank within the home or garage where open flames, pilot lights, sparks or electric motors are present. Gasoline is extremely flammable and highly explosive, which could result in death or serious injury. (00003a)

1. Change engine oil and filter. See **Maintenance → REPLACE ENGINE OIL AND FILTER**.
2. Check transmission lubricant level. See **Maintenance → REPLACE TRANSMISSION LUBRICANT**.

WARNING

Avoid spills. Slowly remove filler cap. Do not fill above bottom of filler neck insert, leaving air space for fuel expansion. Secure filler cap after refueling. Gasoline is extremely flammable and highly explosive, which could result in death or serious injury. (00028a)

WARNING

Use care when refueling. Pressurized air in fuel tank can force gasoline to escape through filler tube. Gasoline is extremely flammable and highly explosive, which could result in death or serious injury. (00029a)

1. Prepare fuel tank.
   a. Fill fuel tank.
   b. Add fuel stabilizer.
2. Lubricate cylinders.
   a. Remove spark plugs. See **Maintenance → CLEAN AND INSPECT SPARK PLUGS**.
   b. Inject a few squirts of engine oil into each cylinder.
   c. Crank engine for 5-6 revolutions.
   d. Install spark plugs. See **Maintenance → CLEAN AND INSPECT SPARK PLUGS**.
3. Inspect drive belt deflection. See **Maintenance → INSPECT AND ADJUST DRIVE BELT AND SPROCKETS**.
4. Inspect drive belt and sprockets. See **Maintenance → INSPECT AND ADJUST DRIVE BELT AND SPROCKETS**.
5. Inspect air cleaner filter. See **Maintenance → INSPECT AIR FILTER**.
6. Lubricate controls. See **Maintenance → LUBRICATE CABLES AND CHASSIS**.
7. Check tire inflation and inspect tires for wear and/or damage. See **Maintenance → INSPECT TIRES AND WHEELS**.
8. If the motorcycle will be stored for an extended period of time, securely support the motorcycle under the frame so that all weight is off the tires.
9. Inspect operation of all electrical equipment and switches.

WARNING

Be sure that brake fluid or other lubricants do not contact brake pads or discs. Such contact can adversely affect braking ability,

which could cause loss of control, resulting in death or serious injury. (00290a)

1. Wash painted and chrome-plated surfaces. Apply a light film of oil to exposed unpainted surfaces.

WARNING

Unplug or turn OFF battery charger before connecting charger cables to battery. Connecting cables with charger ON can cause a spark and battery explosion, which could result in death or serious injury. (00066a)

WARNING

Explosive hydrogen gas, which escapes during charging, could cause death or serious injury. Charge battery in a well-ventilated area. Keep open flames, electrical sparks and smoking materials away from battery at all times. KEEP BATTERIES AWAY FROM CHILDREN. (00065a)

1. Battery maintenance.
   a. Remove battery from vehicle. See **Maintenance → INSPECT BATTERY**.
   b. Charge battery until the correct voltage is obtained.
   c. Charge the battery every other month if it is stored at temperatures below specification.
   Temperature: 16 °C (60 °F)
2. Charge battery once a month if it is stored at temperatures above specification.
   Temperature: 16 °C (60 °F)

WARNING

Unplug or turn OFF battery charger before disconnecting charger cables from battery. Disconnecting clamps with charger ON can cause a spark and battery explosion, which could result in death or serious injury. (00067a)

1. Covering the motorcycle.
   a. If the motorcycle is to be covered, use a material that will breathe, such as a Harley-Davidson storage cover or light canvas.
   b. Plastic materials that do not breathe promote the formation of condensation, which leads to corrosion.

WARNING

The clutch failing to disengage can cause loss of control, which could result in death or serious injury. Prior to starting after extended periods of storage, place transmission in gear and push vehicle back and forth several times to assure proper clutch disengagement. (00075a)

1. Charge battery.
2. Install battery. See **Maintenance → INSPECT BATTERY**.
3. Inspect spark plugs. See **Maintenance → CLEAN AND INSPECT SPARK PLUGS**.
4. Fill fuel tank, if empty.
5. Start engine. Run until it reaches normal operating temperature.
6. Check engine oil level. See **Maintenance → REPLACE ENGINE OIL AND FILTER**.
7. Check transmission lubricant level. See **Maintenance → REPLACE TRANSMISSION LUBRICANT**.
8. Perform all of the checks in the PRE-RIDING CHECKLIST in the owner's manual.

Starter Motor Does Not Operate or Does Not Turn Engine Over

1. Engine run switch in OFF position.
2. Discharged battery, loose or corroded connections (solenoid chatters).
3. Starter control circuit faulty.
4. Electric starter shaft pinion gear not engaging or overrunning clutch slipping.
5. Bank Angle Sensor tripped and ignition not cycled OFF then back to RUN.
6. Security system activated.
7. Motorcycle in gear and clutch not pulled in.
8. Jiffy stand down and transmission in gear (HDI models only).
9. Main fuse not in place.

Engine Turns Over But Does Not Start

1. Less than 3.79 L (1 USgal) of fuel in fuel tank.
2. Fouled spark plugs.
3. Discharged battery, loose or damaged battery terminal connections.
4. Engine lubricant too heavy (winter operation).

NOTE

For cold-weather starts, always disengage clutch.

5. Spark plug cables in bad condition and shorting, cable connections loose or cables connected to incorrect cylinders.
6. Damaged wire or loose wire connection at ignition coil, battery or ECM connector.
7. Ignition timing incorrect due to faulty ignition coil, ECM or sensors.
8. Bank Angle Sensor tripped and ignition not cycled OFF then back to RUN.
9. Fuel filter clogged.
10. Sticking or damaged valve(s) or wrong length pushrod(s).
11. Plugged fuel injectors.

Starts Hard

1. Spark plugs in bad condition or have improper gap or are partially fouled.
2. Spark plug cables in poor condition.
3. Battery nearly discharged.
4. Damaged wire or loose wire connection at ignition coil, battery or ECM connector.
5. Water or dirt in fuel system.
6. Intake air leak.
7. Fuel tank vent hose, filler cap vent or vapor valve plugged, or fuel line closed off, restricting fuel flow.
8. Engine lubricant too heavy (winter operation).

NOTE

For cold-weather starts, always disengage clutch.

9. Ignition not functioning properly (possible sensor failure).
10. Faulty ignition coil.
11. Valves sticking.
12. Partially plugged fuel injector(s).

Starts But Runs Irregularly or Misses

1. Spark plugs in poor condition or partially fouled.
2. Spark plug cables in poor condition and shorting or leaking.
3. Spark plug gap too close or too wide.
4. Faulty ignition coil, ECM or sensor.
5. Battery nearly discharged.
6. Damaged wire or loose wire connection at ignition coil, battery or ECM connector.
7. Intermittent short circuit due to damaged wire insulation.
8. Water or dirt in fuel system.
9. Fuel tank vent system plugged.
10. Air leak at intake manifold or air cleaner.
11. Loose or dirty ECM connector.
12. Faulty Sensor(s): Temperature Manifold Absolute Pressure (TMAP), Crank Position (CKP) or Oxygen (O2).
13. Incorrect valve timing.
14. Weak or damaged valve springs.
15. Damaged intake or exhaust valve.
16. Partially plugged fuel injector(s).

A Spark Plug Fouls Repeatedly

1. Fuel mixture too rich.
2. Incorrect spark plug for the kind of service.
3. Piston rings badly worn or damaged.
4. Valve guides or seals badly worn.

Pre-Ignition or Detonation (Knocks or Pings)

1. Fuel octane rating too low.
2. Faulty spark plugs.
3. Incorrect spark plug for the kind of service.
4. Excessive carbon deposit on piston head or in combustion chamber.
5. Ignition timing advanced due to faulty sensor inputs (TMAP and/or CKP).
6. Ignition timing advanced due to ECM or sensors (CKP, ET or TMAP) defective.
7. Intake manifold vacuum leak.

Overheating

1. Insufficient oil supply or oil not circulating.
2. Oil cooler dirty.
3. Insufficient air flow over engine.
4. Heavy carbon deposits.
5. Ignition timing retarded due to defective ECM or faulty sensor(s) (TMAP and/or CKP).
6. Leaking valve(s).

Valve Train Noise

NOTE

Some valve train noise at start-up is normal until lifters fill with oil.

1. Low oil pressure caused by oil feed pump not functioning properly or oil passages obstructed.
2. Faulty hydraulic lifter(s).
3. Bent pushrod(s).
4. Incorrect pushrod length.
5. Rocker arm binding on shaft.
6. Valve sticking in guide.
7. Chain tensioning shoe worn.
8. Cam(s), cam gear(s) or cam bushing(s) worn.
9. Cam timing incorrect.

Excessive Vibration

1. Wheels bent or damaged and/or tires worn or damaged.
2. Engine/Transmission/Rear Wheel not aligned properly.
3. Primary chain badly worn or links tight as a result of insufficient lubrication or misalignment.
4. Engine to transmission mounting bolts loose.
5. Upper engine mounting bracket loose/damaged or mounting bracket pre-loaded.
6. Ignition timing advanced due to faulty sensor inputs (TMAP and/or CKP)/poorly tuned engine.
7. Internal engine problem.
8. Damaged frame.
9. Rear fork pivot shaft fasteners loose.
10. Exhaust system binding and causing unnecessary side loads.

Check Engine Light Illuminates During Operation

Fault detected. For diagnostic information see the electrical diagnostic manual.

Oil Does Not Return To Oil Reservoir

1. Oil reservoir empty.
2. Oil pump not functioning.
3. Restricted oil lines or fittings.
4. Restricted oil filter.
5. O-ring damaged or missing from oil pump/crankcase junction (also results in poor engine performance).

Engine Uses Too Much Oil Or Smokes Excessively

1. Oil reservoir overfilled.
2. Restricted oil return line to oil reservoir.
3. Restricted breather operation.
4. Restricted oil filter.
5. Oil pump misaligned or in poor condition.
6. Piston rings badly worn or broken.
7. Valve guides or seals worn or damaged.
8. O-ring damaged or missing from oil pump/crankcase junction (also results in poor engine performance).
9. Plugged crankcase scavenge port.
10. Oil diluted with gasoline.

Engine Leaks Oil From Cases, Pushrods, Hoses, Etc.

1. Loose parts.
2. Imperfect seal at gaskets, pushrod covers, washers, etc.
3. Restricted breather passages or hose to air cleaner.
4. Restricted oil filter.
5. Oil reservoir overfilled.
6. Lower rocker housing gasket installed incorrectly (upside down).
7. Restricted oil return line to oil reservoir.
8. Porosity.

Low Oil Pressure

1. Oil reservoir underfilled.
2. Faulty low oil pressure switch.
3. Oil pump O-ring damaged or missing.
4. Bypass valve stuck in open position.
5. Ball missing or leaking in cam support plate.
6. Worn oil pump gerotor(s).
7. Oil diluted with gasoline.

High Oil Pressure

1. Oil reservoir overfilled.
2. Bypass valve stuck in closed position.

NOTE

For diagnostic information see the electrical diagnostic manual.

Alternator Does Not Charge

1. Engine ground wire loose or damaged.
2. Faulty voltage regulator module.
3. Loose or damaged wires in charging circuit.
4. Faulty stator and/or rotor.

Alternator Charge Rate Is Below Normal

1. Weak or damaged battery.
2. Loose connections.
3. Faulty voltage regulator module.
4. Faulty stator and/or rotor.

Speedometer Operates Erratically

1. Contaminated vehicle speed sensor (remove sensor and clean off metal particles).
2. Loose connections.

Shifts Hard

1. Primary chaincase overfilled.
2. Clutch not fully disengaging.
3. Transmission lubricant too heavy (winter operation).
4. Shifter return spring (inside transmission) bent or otherwise damaged.
5. Bent shifter rod.
6. Shifter forks sprung.
7. Corners worn off shifter clutch dog rings (inside transmission).

Jumps Out Of Gear

1. Shifter rod improperly adjusted.
2. Shifter drum damaged/worn.
3. Shifter engaging parts badly worn and rounded.
4. Bent shifter forks .
5. Damaged gears.

Clutch Slips

1. Reservoir overfull.
2. Clutch lever not returning completely.
3. Insufficient clutch spring tension.
4. Worn friction discs.

Clutch Drags Or Does Not Release

1. Lubricant level too high in primary chaincase.
2. Primary chain badly misaligned or too tight.
3. Insufficient clutch spring tension.
4. Clutch discs warped.

Clutch Chatters

Friction discs or steel discs worn or warped.

Irregularities

1. Improperly loaded motorcycle. Non-standard equipment on the front end such as heavy radio receivers, extra lighting equipment or luggage tends to cause unstable handling.
2. Damaged tire(s) or improper front-rear tire combination.
3. Irregular or peaked front tire tread wear.
4. Incorrect tire pressure. See **Chassis → SPECIFICATIONS**
5. Shock absorber not functioning normally.
6. Loose wheel axle nuts. Tighten to recommended torque specification.
7. Rear wheel out of alignment with frame and front wheel.
8. Steering head bearings improperly adjusted. Correct adjustment and replace pitted or worn bearings and races.
9. Loose spokes (laced wheel vehicles only).
10. Tire and wheel unbalanced.
11. Rims and tires out-of-round or eccentric with hub.
12. Rims and tires out-of-true sideways.
13. Rear fork pivot-improper torque.
14. Incorrect, non-specified tire(s) mounted on front or rear wheel.

Brake Does Not Hold Normally

1. Brake fluid reservoir low, system leaking or pads worn.
2. Brake system contains air bubbles.
3. Master cylinder/caliper piston seals worn or parts damaged.
4. Brake pads contaminated with grease or oil.
5. Brake pads badly worn.
6. Brake disc badly worn or warped.
7. Brake drags - insufficient brake pedal or hand lever free play, caliper piston worn or damaged, or excessive brake fluid in reservoir.
8. Brake fades due to heat build up - brake pads dragging or excessive braking.
9. Brake fluid leak when under pressure.

FASTENER	TORQUE VALUE	NOTES
ABS Module bracket screw	10.8–13.5 N·m (96–119 **in-lbs**)	3.16 ABS MODULE, Install
ABS Module frame screw	10.8–13.5 N·m (96–119 **in-lbs**)	3.16 ABS MODULE, Install
Banjo bolt	29–31 N·m (21–23 ft-lbs)	3.17 BLEED BRAKES, Fill and Bleed
Banjo bolt to ABS module	23.1–25.8 N·m (17–19 ft-lbs)	3.15 BRAKE LINES, Front ABS Lines
Banjo bolt to ABS module	23.1–25.8 N·m (17–19 ft-lbs)	3.15 BRAKE LINES, Brake Line: Rear Master Cylinder to ABS Module
Banjo bolt to ABS module	23.1–25.8 N·m (17–19 ft-lbs)	3.15 BRAKE LINES, Brake Line: Rear Caliper to ABS Module
Banjo bolt to brake caliper, rear	29–31 N·m (21–23 ft-lbs)	3.15 BRAKE LINES, Brake Line: Rear Caliper to ABS Module
Banjo bolt to master cylinder, rear	29–31 N·m (21–23 ft-lbs)	3.15 BRAKE LINES, Brake Line: Rear Master Cylinder to ABS Module
Belt guard, lower, screws	12.2–14.9 N·m (108–132 **in-lbs**)	3.24 BELT GUARDS, Remove and Install: Cast Rear Fork
Belt guard, upper, lower screws	12.2–14.9 N·m (108–132 **in-lbs**)	3.24 BELT GUARDS, Remove and Install: Cast Rear Fork
Belt guard, upper, upper screw with grommet	12.2–14.9 N·m (108–132 **in-lbs**)	3.24 BELT GUARDS, Remove and Install: Cast Rear Fork
Bleeder screw	3.9–6.9 N·m (35–61 **in-lbs**)	3.17 BLEED BRAKES, Fill and Bleed
Brake caliper, front, bridge bolt	19.6–24.5 N·m (14–18 ft-lbs)	3.12 FRONT BRAKE CALIPER, Assemble
Brake clamp screw	4.1–5.4 N·m (36–48 **in-lbs**)	3.15 BRAKE LINES, Brake Line: Front Master Cylinder (ABS)
Brake line tube nuts, manifold	14.5–19.5 N·m (128–173 **in-lbs**)	3.15 BRAKE LINES, Brake Line: Front Master Cylinder (ABS)
Brake master cylinder, rear, mounting screws	24.4–29.9 N·m (18–22 ft-lbs)	3.13 REAR BRAKE MASTER CYLINDER, Install
Brake master cylinder, reservoir cover screw	1–2 N·m (9–18 **in-lbs**)	3.17 BLEED BRAKES, Fill and Bleed
Brake pedal linkage screw	20.3–24.4 N·m (15–18 ft-lbs)	3.42 RIGHT FOOT CONTROLS, Remove and Install: Mid Foot Controls
Brake pedal linkage screw	20.3–24.4 N·m (15–18 ft-lbs)	3.42 RIGHT FOOT CONTROLS, Remove and Install: Mid Foot Controls

Brake pedal pivot screw	24.4–29.8 N·m (18–22 ft-lbs)	3.42 RIGHT FOOT CONTROLS, Remove and Install: Forward Foot Controls
Brake pedal pivot screw	13.6–19 N·m (10–14 ft-lbs)	3.42 RIGHT FOOT CONTROLS, Remove and Install: Mid Foot Controls
Clamp screw	2.7–4 N·m (24–35 **in-lbs**)	3.15 BRAKE LINES, Brake Line: Rear Master Cylinder to ABS Module
Clamp screw	2.7–4 N·m (24–35 **in-lbs**)	3.15 BRAKE LINES, Brake Line: Rear Caliper to ABS Module
Clutch cable lever screw	6.8–9 N·m (60–80 **in-lbs**)	3.26 CLUTCH CONTROL, Install
Cowl stud screw	9–11 N·m (80–97 **in-lbs**)	3.34 REAR FENDER, Disassemble and Assemble: Tail Section
ECM caddy small screw	6.2–6.8 N·m (55–60 **in-lbs**)	3.46 FRAME CROSSMEMBER, Install
FXBB: Hub cap screw	22–33 N·m (16–24 ft-lbs)	3.4 FRONT WHEEL, Assemble
Fairing windshield screw	3.6–4.5 N·m (32–40 **in-lbs**)	3.28 FAIRING, Disassemble and Assemble
Fairing, inner screw	3.6–4.5 N·m (32–40 **in-lbs**)	3.28 FAIRING, Disassemble and Assemble
Foot support bracket screws	54.2–61 N·m (40–45 ft-lbs)	3.41 LEFT FOOT CONTROLS, Install
Foot support bracket screws	54.2–61 N·m (40–45 ft-lbs)	3.42 RIGHT FOOT CONTROLS, Remove and Install: Forward Foot Controls
Foot support bracket screws	54.2–61 N·m (40–45 ft-lbs)	3.42 RIGHT FOOT CONTROLS, Remove and Install: Mid Foot Controls
Fork bracket, lower, pinch bolt	21.7–27.1 N·m (16–20 ft-lbs)	3.20 FRONT FORK, Install *Models with two lower pinch bolts per side: Alternately tighten until specification is met.*
Fork bracket, upper, pinch bolt	21.7–27.1 N·m (16–20 ft-lbs)	3.20 FRONT FORK, Install
Fork damper tube screw, front	40–50 N·m (30–37 ft-lbs)	3.20 FRONT FORK, Disassemble and Assemble: Standard
Fork stem pinch bolt - All except FXDRS	21.7–27.1 N·m (16–20 ft-lbs)	3.21 STEERING HEAD/FORK STEM AND BRACKET ASSEMBLY, Install
Fork stem pinch bolt - FXDRS	38–43.4 N·m (28–32 ft-lbs)	3.21 STEERING HEAD/FORK STEM AND BRACKET ASSEMBLY, Install
Fork stem screw, final torque - All except FXDRS	7–7.6 N·m (62–67 **in-lbs**)	3.21 STEERING HEAD/FORK STEM AND BRACKET ASSEMBLY, Install

Fork stem screw, final torque - FXDRS	11.3–12.4 N·m (100–110 **in-lbs**)	3.21 STEERING HEAD/FORK STEM AND BRACKET ASSEMBLY, Install
Fork stem screw, first torque	18.1–19 N·m (160–168 **in-lbs**)	3.21 STEERING HEAD/FORK STEM AND BRACKET ASSEMBLY, Install
Fork tube plug	29–39 N·m (22–28 ft-lbs)	3.20 FRONT FORK, Disassemble and Assemble: Inverted, Left Side
Fork tube plug	30–40 N·m (22–30 ft-lbs)	3.20 FRONT FORK, Disassemble and Assemble: Inverted, Right Side
Fork tube plug to damper nut	17.5–22.5 N·m (13–16 ft-lbs)	3.20 FRONT FORK, Disassemble and Assemble: Inverted, Left Side
Fork tube plug to damper nut	17.5–22.5 N·m (13–16 ft-lbs)	3.20 FRONT FORK, Disassemble and Assemble: Inverted, Right Side
Fork tube plug, standard	30–80 N·m (22–59 ft-lbs)	3.20 FRONT FORK, Disassemble and Assemble: Standard
Fork, cartridge screw	15–25 N·m (11–18 ft-lbs)	3.20 FRONT FORK, Disassemble and Assemble: Inverted, Left Side
Fork, right, inner fork nut	93–113 N·m (69–83 ft-lbs)	3.20 FRONT FORK, Disassemble and Assemble: Inverted, Right Side
Frame crossmember mounting screws	23.1–27.1 N·m (17–20 ft-lbs)	3.46 FRAME CROSSMEMBER, Install
Front ABS brake line P-clamp screw	4.1–5.4 N·m (36–48 **in-lbs**)	3.15 BRAKE LINES, Front ABS Lines
Front ABS brake line to front brake line	14.5–19.5 N·m (128–173 **in-lbs**)	3.15 BRAKE LINES, Front ABS Lines
Front brake caliper banjo bolt	19–24.4 N·m (14–18 ft-lbs)	3.12 FRONT BRAKE CALIPER, Install
Front brake caliper bleeder screw	3.9–6.9 N·m (35–61 **in-lbs**)	3.12 FRONT BRAKE CALIPER, Assemble
Front brake caliper bridge bolt	19.6–24.5 N·m (14–18 ft-lbs)	3.12 FRONT BRAKE CALIPER, Install
Front brake caliper mounting bolts	38–51.5 N·m (28–38 ft-lbs)	3.12 FRONT BRAKE CALIPER, Install
Front brake caliper mounting bolts	38–51.5 N·m (28–38 ft-lbs)	3.12 FRONT BRAKE CALIPER, Install
Front brake caliper mounting bolts	38–51.5 N·m (28–38 ft-lbs)	3.12 FRONT BRAKE CALIPER, Install
Front brake caliper pad hanger pin	14.7–19.6 N·m (11–14 ft-lbs)	3.12 FRONT BRAKE CALIPER, Install
Front brake caliper pad hanger pin	14.7–19.6 N·m (11–14 ft-lbs)	3.12 FRONT BRAKE CALIPER, Install

Front brake disc screw	22–33 N·m (16–24 ft-lbs)	3.4 FRONT WHEEL, Assemble
Front brake line screw	4.1–5.4 N·m (36–48 **in-lbs**)	3.15 BRAKE LINES, Brake Line: Front Caliper (ABS)
Front brake line screw	4.1–5.4 N·m (36–48 **in-lbs**)	3.15 BRAKE LINES, Front Brake Line: Non-ABS
Front brake master cylinder banjo bolt - Dual disk front brake	32–34 N·m (24–25 ft-lbs)	3.11 FRONT BRAKE MASTER CYLINDER, Install
Front brake master cylinder banjo bolt - Single disk front brake	29–31 N·m (21–23 ft-lbs)	3.11 FRONT BRAKE MASTER CYLINDER, Install
Front fender mounting screw (typical)	22–28 N·m (16–21 ft-lbs)	3.33 FRONT FENDER, Install
Front fender mounting screw, FXBB	22–28 N·m (16–21 ft-lbs)	3.33 FRONT FENDER, Install
Front fender mounting screw, FXFB/FXFBS	8–10 N·m (71–89 **in-lbs**)	3.33 FRONT FENDER, Install
Front fender side trim nut	1.1–1.6 N·m (10–14 **in-lbs**)	3.33 FRONT FENDER, Assemble
Front fender to bracket screw, FXFB/FXFBS/FXDRS	4.1–5.4 N·m (36–48 **in-lbs**)	3.33 FRONT FENDER, Install
Front fork bottom mount pinch bolt	15–20 N·m (11–15 ft-lbs)	3.4 FRONT WHEEL, Install
Front fork side mount pinch bolt	28–34 N·m (21–25 ft-lbs)	3.4 FRONT WHEEL, Install
Front licence plate slotted bracket screw with spacer	30–38 N·m (22–28 ft-lbs)	3.39 FRONT LICENSE PLATE BRACKET, Install
Front licence plate slotted bracket screw without spacer	8–12 N·m (6–9 ft-lbs)	3.39 FRONT LICENSE PLATE BRACKET, Install
Front licence plate two hole bracket screw	22–27 N·m (16–20 ft-lbs)	3.39 FRONT LICENSE PLATE BRACKET, Install
Front licence plate two tab bracket screw	30–38 N·m (22–28 ft-lbs)	3.39 FRONT LICENSE PLATE BRACKET, Install
Front wheel axle	94.9–101.6 N·m (70–75 ft-lbs)	3.4 FRONT WHEEL, Install
Handlebar clamp gap limiting fasteners	16.3–21.7 N·m (12–16 ft-lbs)	3.31 HANDLEBAR, Disassemble and Assemble: Standard
Handlebar clamp open gap fasteners	16.3–21.7 N·m (12–16 ft-lbs)	3.31 HANDLEBAR, Disassemble and Assemble: Standard
Handlebar switch clamp screw	6.8–9 N·m	3.11 FRONT BRAKE MASTER

	(60–80 **in-lbs**)	CYLINDER, Install
Handlebar tube screw	24.4–29.8 N·m (18–22 ft-lbs)	3.31 HANDLEBAR, Disassemble and Assemble: Clip-on
Headlamp nacelle clamp screw	4.06–5.42 N·m (36–48 **in-lbs**)	3.27 HEADLAMP NACELLE, Install
Headlamp nacelle cover screw	9.4–12.2 N·m (7–9 ft-lbs)	3.27 HEADLAMP NACELLE, Install
Headlamp nacelle cover screw	9.4–12.2 N·m (7–9 ft-lbs)	3.27 HEADLAMP NACELLE, Install
Headlamp nacelle screw	9.6–11.7 N·m (85–104 **in-lbs**)	3.27 HEADLAMP NACELLE, Install
Headlamp nacelle trim strip screw	9.4–12.2 N·m (83–108 **in-lbs**)	3.27 HEADLAMP NACELLE, Install
Headlamp nacelle trim strip screw	9.4–12.2 N·m (83–108 **in-lbs**)	3.27 HEADLAMP NACELLE, Install
Headlamp, nacelle mounted, bezel screw	2.8–3.6 N·m (25–32 **in-lbs**)	3.27 HEADLAMP NACELLE, Install
Jiffy stand screws	54.2–61 N·m (40–45 ft-lbs)	3.44 JIFFY STAND, Install
License plate bracket inner mounting screws	2.03–2.37 N·m (18–21 **in-lbs**)	3.40 REAR LICENSE PLATE BRACKET, Center Mount
License plate bracket outer mounting screws	7.11–8.69 N·m (63–77 **in-lbs**)	3.40 REAR LICENSE PLATE BRACKET, Center Mount
License plate bracket screws - lighting bracket mount	6.8–7.9 N·m (60–70 **in-lbs**)	3.40 REAR LICENSE PLATE BRACKET, Lighting Bracket Mount
License plate holder screw	7.11–8.69 N·m (63–77 **in-lbs**)	3.40 REAR LICENSE PLATE BRACKET, Center Mount With Lighting
License plate standard assembly bolt	7–10 N·m (62–89 **in-lbs**)	3.40 REAR LICENSE PLATE BRACKET, Standard
License plate standard mount screws	8–11 N·m (71–97 **in-lbs**)	3.40 REAR LICENSE PLATE BRACKET, Standard
Lower belt guard screw	7.9–9 N·m (70–80 **in-lbs**)	3.24 BELT GUARDS, Remove and Install: Standard
Lower shock screw	94.9–101.68 N·m (70–75 ft-lbs)	3.25 REAR SHOCK ABSORBER, Install
Master brake cylinder yoke	14.7–19.6 N·m (11–14 ft-lbs)	3.13 REAR BRAKE MASTER CYLINDER, Disassemble and Assemble: Master Cylinder
Master cylinder bracket to frame screw	40.7–54.2 N·m (30–40 ft-lbs)	3.13 REAR BRAKE MASTER CYLINDER, Install

Master cylinder, rear, banjo bolt	19–24.4 N·m (14–18 ft-lbs)	3.13 REAR BRAKE MASTER CYLINDER, Install
Mirror mounting nut	10.8–16.3 N·m (96–144 **in-lbs**)	3.32 MIRRORS, Install
Mud guard screw	3.4–4.5 N·m (30–40 **in-lbs**)	3.36 MUD GUARD, Install
Mud guard screw	3.4–4.5 N·m (30–40 **in-lbs**)	3.37 REAR LIGHTING BRACKET, Install
One piece seat grab strap screw	6.8–10.16 N·m (60–90 **in-lbs**)	3.45 SEAT, Install
Passenger footpeg support screw	51.5–63.7 N·m (38–47 ft-lbs)	3.43 PASSENGER FOOTRESTS, Install
Rear brake caliper banjo bolt	29–31 N·m (21–23 ft-lbs)	3.14 REAR BRAKE CALIPER, Install
Rear brake caliper pad hanger pin	14.7–19.6 N·m (11–14 ft-lbs)	3.14 REAR BRAKE CALIPER, Install
Rear brake caliper pad hanger pin	14.7–19.6 N·m (11–14 ft-lbs)	3.14 REAR BRAKE CALIPER, Install
Rear brake disc screws	40.7–61 N·m (30–45 ft-lbs)	3.5 REAR WHEEL, Assemble
Rear brake line bracket screw	2.7–4 N·m (24–35 **in-lbs**)	3.15 BRAKE LINES, Brake Line: Rear Master Cylinder to ABS Module
Rear brake line bracket screw	2.7–4 N·m (24–35 **in-lbs**)	3.15 BRAKE LINES, Brake Line: Rear Caliper to ABS Module
Rear brake line bracket screws	2.7–4.1 N·m (24–36 **in-lbs**)	3.15 BRAKE LINES, Rear Brake Line: Non-ABS
Rear brake line clamp screws	2.7–4.1 N·m (24–36 **in-lbs**)	3.15 BRAKE LINES, Rear Brake Line: Non-ABS
Rear caliper sleeve screw	19.6–24.5 N·m (14–18 ft-lbs)	3.14 REAR BRAKE CALIPER, Install
Rear caliper slider bolt	19.6–24.5 N·m (14–18 ft-lbs)	3.14 REAR BRAKE CALIPER, Install
Rear fender inner mount screw	28–37 N·m (21–27 ft-lbs)	3.34 REAR FENDER, Disassemble and Assemble: Chopped Fender Without License Plate Bracket Lighting
Rear fender support screw	28–37 N·m (21–27 ft-lbs)	3.34 REAR FENDER, Disassemble and Assemble: Chopped Fender Without License Plate Bracket Lighting
Rear fender support screw	28–37 N·m (21–27 ft-lbs)	3.34 REAR FENDER, Disassemble and Assemble: Chopped Fender Without

		License Plate Bracket Lighting
Rear fender support screw	28–37 N·m (21–27 ft-lbs)	3.34 REAR FENDER, Disassemble and Assemble: Chopped Fender With License Plate Bracket Lighting
Rear fender support screws	57–62 N·m (42–46 ft-lbs)	3.34 REAR FENDER, Remove and Install: Standard
Rear fender support screws	28–37 N·m (21–27 ft-lbs)	3.34 REAR FENDER, Disassemble and Assemble: Full Fender
Rear fork pivot shaft nut, final torque	209–230 N·m (154–170 ft-lbs)	3.23 REAR FORK, Remove and Install
Rear fork pivot shaft nut, first torque	34–41 N·m (25–30 ft-lbs)	3.23 REAR FORK, Remove and Install
Rear fork pivot shaft nut, second torque	0.1–5.4 N·m (1–48 **in-lbs**)	3.23 REAR FORK, Remove and Install
Rear fork pivot shaft nut, third torque	209–230 N·m (154–170 ft-lbs)	3.23 REAR FORK, Remove and Install
Rear fork pivot shaft pinch bolt	24–27 N·m (18–20 ft-lbs)	3.23 REAR FORK, Remove and Install
Rear lighting harness caddy screw	12.2–14.9 N·m (9–11 ft-lbs)	3.23 REAR FORK, Disassemble and Assemble: Cast
Rear lighting mounting bracket screws	30–34 N·m (22–25 ft-lbs)	3.37 REAR LIGHTING BRACKET, Install
Rear shock adjuster knob screw	3–5 N·m (26.6–44.3 **in-lbs**)	3.25 REAR SHOCK ABSORBER, Disassemble and Assemble: Rear Shock Adjuster
Rear sprocket screws, final torque	104.4–112.5 N·m (77–83 ft-lbs)	3.5 REAR WHEEL, Assemble
Rear sprocket screws, first torque	81.3 N·m (60 ft-lbs)	3.5 REAR WHEEL, Assemble
Riser flange nuts	40.7–54.3 N·m (30–40 ft-lbs)	3.31 HANDLEBAR, Remove and Install: Standard
Riser flange nuts	40.7–54.3 N·m (30–40 ft-lbs)	3.31 HANDLEBAR, Disassemble and Assemble: Standard
Riser pinch screw	21.7–27.1 N·m (16–20 ft-lbs)	3.31 HANDLEBAR, Remove and Install: Clip-on
Saddle bag docking bracket screw	52–64 N·m (38–47 ft-lbs)	3.24 BELT GUARDS, Remove and Install: Standard
Saddlebag screw	28–37 N·m (21–27 ft-lbs)	3.47 SADDLEBAGS, Remove and Install: Standard
Saddlebag docking rod	17–21 N·m	3.47 SADDLEBAGS, Disassemble and

	(13–15 ft-lbs)	Assemble: Quick Disconnect
Saddlebag hinge screw	2–2.8 N·m (18–25 **in-lbs**)	3.47 SADDLEBAGS, Disassemble and Assemble: Standard
Saddlebag hinge screw	2.3–3.4 N·m (20–30 **in-lbs**)	3.47 SADDLEBAGS, Disassemble and Assemble: Quick Disconnect
Saddlebag hinge screw	2.3–3.4 N·m (20–30 **in-lbs**)	3.47 SADDLEBAGS, Disassemble and Assemble: Quick Disconnect
Saddlebag indicator flag cover screw	2.7–4 N·m (24–35 **in-lbs**)	3.47 SADDLEBAGS, Disassemble and Assemble: Quick Disconnect
Saddlebag latch assembly	1.7–2.3 N·m (15–20 **in-lbs**)	3.47 SADDLEBAGS, Disassemble and Assemble: Quick Disconnect
Saddlebag latch lever screw	2.3–3.4 N·m (20–30 **in-lbs**)	3.47 SADDLEBAGS, Disassemble and Assemble: Quick Disconnect
Saddlebag left side mounting bracket grommet screw	10.9–13.6 N·m (96–120 **in-lbs**)	3.47 SADDLEBAGS, Remove and Install: Standard
Saddlebag left side mounting bracket grommet screw	11–14 N·m (97–124 **in-lbs**)	3.47 SADDLEBAGS, Remove and Install: Quick Disconnect
Saddlebag left side mounting bracket screw	52–64 N·m (38–47 ft-lbs)	3.47 SADDLEBAGS, Remove and Install: Standard
Saddlebag left side mounting bracket screw	52–64 N·m (38–47 ft-lbs)	3.47 SADDLEBAGS, Remove and Install: Quick Disconnect
Saddlebag locking knob cover screw	11–14 N·m (97–124 **in-lbs**)	3.47 SADDLEBAGS, Disassemble and Assemble: Quick Disconnect
Saddlebag locking knob screw	11–14 N·m (97–124 **in-lbs**)	3.47 SADDLEBAGS, Disassemble and Assemble: Quick Disconnect
Saddlebag lockset nut	5–6.2 N·m (44–55 **in-lbs**)	3.47 SADDLEBAGS, Disassemble and Assemble: Standard
Saddlebag mounting bolt	28–37 N·m (21–27 ft-lbs)	3.47 SADDLEBAGS, Remove and Install: Quick Disconnect
Saddlebag right side mounting bracket grommet screw	10.9–13.6 N·m (96–120 **in-lbs**)	3.47 SADDLEBAGS, Remove and Install: Standard
Saddlebag right side mounting bracket grommet screw	11–14 N·m (97–124 **in-lbs**)	3.47 SADDLEBAGS, Remove and Install: Quick Disconnect
Saddlebag strike screw	2.3–3.4 N·m (20–30 **in-lbs**)	3.47 SADDLEBAGS, Disassemble and Assemble: Quick Disconnect
Saddlebag tether screw	5–6 N·m (44–53 **in-lbs**)	3.47 SADDLEBAGS, Disassemble and Assemble: Quick Disconnect
Saddlebag tether stud	5–6 N·m (44–53 **in-lbs**)	3.47 SADDLEBAGS, Disassemble and Assemble: Quick Disconnect

Saddlebag tether to lid screw	0.9–1.6 N·m (8–14 **in-lbs**)	3.47 SADDLEBAGS, Disassemble and Assemble: Standard
Saddlebag tether to lid screw	0.9–1.6 N·m (8–14 **in-lbs**)	3.47 SADDLEBAGS, Disassemble and Assemble: Standard
Saree lower guard top screw	8–9 N·m (71–80 **in-lbs**)	3.38 SAREE GUARD, Install
Saree lower guard lower screw	14–18 N·m (10–13 ft-lbs)	3.38 SAREE GUARD, Install
Saree upper guard screw	28–37 N·m (21–27 ft-lbs)	3.38 SAREE GUARD, Install
Seat mounting nut	1–1.7 N·m (9–15 **in-lbs**)	3.45 SEAT, Install
Seat thumbscrew	1.7–3.4 N·m (15–30 **in-lbs**)	3.45 SEAT, Install
Seat thumbscrew	1.7–3.4 N·m (15–30 **in-lbs**)	3.45 SEAT, Install
Seat thumbscrew	1.7–3.4 N·m (15–30 **in-lbs**)	3.45 SEAT, Install
Seat, solo w/hex head screw	9.5–12.2 N·m (84–108 **in-lbs**)	3.45 SEAT, Install
Shift lever bracket screws	13.6–16.3 N·m (120–144 **in-lbs**)	3.41 LEFT FOOT CONTROLS, Disassemble and Assemble: Footboard
Shock adjuster mounting screw	6.1–8.8 N·m (54–78 **in-lbs**)	3.46 FRAME CROSSMEMBER, Install
Shock pinch bolt, all but FXDRS	16.26–20.33 N·m (12–15 ft-lbs)	3.25 REAR SHOCK ABSORBER, Install
Shock pinch bolt, large, FXDRS	16.26–20.33 N·m (12–15 ft-lbs)	3.25 REAR SHOCK ABSORBER, Install
Shock pinch bolt, small, FXDRS	12.2–14.9 N·m (108–132 **in-lbs**)	3.25 REAR SHOCK ABSORBER, Install
Side cover screw, vertical screw	2.7–4.1 N·m (24–36 **in-lbs**)	3.19 RIGHT SIDE COVER, Install
Side cover mounting stud	8.1–10.8 N·m (72–96 **in-lbs**)	3.16 ABS MODULE, Install
Side cover screw, horizontal screw	6.8–9.5 N·m (60–84 **in-lbs**)	3.19 RIGHT SIDE COVER, Install
Side cover screw, horizontal screw	6.8–9.5 N·m (60–84 **in-lbs**)	3.18 LEFT SIDE COVER, Install
Side cover screw, single screw	2.7–4.1 N·m	3.18 LEFT SIDE COVER, Install

	(24–36 **in-lbs**)	
Side cover, left side, bracket to frame screw	0.9–1.1 N·m (8–10 **in-lbs**)	3.18 LEFT SIDE COVER, Install
Side-mounted shock adjuster screw	6.1–8.27 N·m (54–73 **in-lbs**)	3.25 REAR SHOCK ABSORBER, Install
Splash guard screw	3.9–5.1 N·m (35–45 **in-lbs**)	3.23 REAR FORK, Remove and Install
Splash guard screw	3.9–5.1 N·m (35–45 **in-lbs**)	3.23 REAR FORK, Disassemble and Assemble: Cast
Spoke nipple	6.2 N·m (55 **in-lbs**)	3.7 CHECKING AND TRUING WHEELS, True Laced Wheels
Tail section forward screws	16.3–19 N·m (12–14 ft-lbs)	3.34 REAR FENDER, Remove and Install: Tail Section
Tail section inner fender screw	2.7–5.4 N·m (24–48 **in-lbs**)	3.34 REAR FENDER, Disassemble and Assemble: Tail Section
Tail section inner fender screw to outer fender screw	2.7–5.4 N·m (24–48 **in-lbs**)	3.34 REAR FENDER, Disassemble and Assemble: Tail Section
Tail section outer fender screw	2.7–5.4 N·m (24–48 **in-lbs**)	3.34 REAR FENDER, Disassemble and Assemble: Tail Section
Tail section rear screws	23–27.1 N·m (17–20 ft-lbs)	3.34 REAR FENDER, Remove and Install: Tail Section
Under seat frame cover, front screw	2.3–3.4 N·m (20–30 **in-lbs**)	3.15 BRAKE LINES, Front ABS Lines
Under seat frame cover, rear screw	10.8–13.6 N·m (96–120 **in-lbs**)	3.15 BRAKE LINES, Front ABS Lines
Upper belt guard screw	7.9–9 N·m (70–80 **in-lbs**)	3.24 BELT GUARDS, Remove and Install: Standard
Upper belt guard screw	7.9–9 N·m (70–80 **in-lbs**)	3.24 BELT GUARDS, Remove and Install: Standard
Upper shock screw	108.4–122 N·m (80–90 ft-lbs)	3.25 REAR SHOCK ABSORBER, Install
Valve stem nut	1.4–1.7 N·m (12–15 **in-lbs**)	3.9 TIRES, Install
Wear peg	3.4–4.7 N·m (30–42 **in-lbs**)	3.41 LEFT FOOT CONTROLS, Disassemble and Assemble: Footboard
Wear peg	3.4–4.7 N·m (30–42 **in-lbs**)	3.41 LEFT FOOT CONTROLS, Disassemble and Assemble: Footpeg
Wear peg	3.4–4.7 N·m (30–42 **in-lbs**)	3.42 RIGHT FOOT CONTROLS, Disassemble and Assemble:

		Footboard
Wear peg	3.4–4.7 N·m (30–42 **in-lbs**)	3.42 RIGHT FOOT CONTROLS, Disassemble and Assemble: Footpeg
Windshield acorn nuts	2.6–3 N·m (23–27 **in-lbs**)	3.29 WINDSHIELD, Assemble
saddlebag lock screw	1.7–2.3 N·m (15–20 **in-lbs**)	3.47 SADDLEBAGS, Disassemble and Assemble: Quick Disconnect

Chassis Specifications

Table 1. Capacities

ITEM		U.S.	L
Fuel tank (total)	FLSL, FLSB, FLDE, FLFB, FLHC, FXLR	5.0 gal	18.9
	FXBR, FXBB, FXFB	3.5 gal	13.25
	FXDRS	4.4 gal	16.7
Low fuel warning light on(1)	All except FXDRS	1.0 gal	3.8
	FXDRS	1.4 gal	5.3
Oil tank with filter(2)		5.0 qt	4.73
Transmission (approximate)(3)		1.0 qt	0.95
Primary chaincase (approximate)(4)		1.25 qt	1.18

(1) When refilling from empty, add at least 3.8 L (1.0 gal).
(2) When refilling, initially add 3.78 L (4.0 qt) and add as needed to bring level within specification.
(3) When refilling, initially add 0.83 L (28 oz) and add as needed to bring level within specification.
(4) When refilling, initially add 1.06 L (36 oz) and add as needed to bring level within specification.

Table 2. Dimensions: FL Models

ITEM	FLDE	FLFB, FLFBS	FLHC, FLHCS	FLSL	FLSB
Length	2,415 mm (95.1 in)	2,370 mm (93.3 in)	2,415 mm (95.1 in)	2,310 mm (90.9 in)	2,330 mm (91.7 in)
Overall width	955 mm (37.6 in)	985 mm (38.8 in)	930 mm (36.6 in)	970 mm (38.2 in)	955 mm (37.6 in)
Overall height	1,125 mm (44.3 in)	1,095 mm (43.1 in)	1,370 mm (53.9 in)	1,095 mm (43.1 in)	1,120 mm (44.1 in)
Wheelbase	1,630 mm (64.2 in)	1,665 mm (65.6 in)	1,630 mm (64.2 in)	1,630 mm (64.2 in)	1,630 mm (64.2 in)
Road clearance	115 mm (4.5 in)	115 mm (4.5 in)	120 mm (4.7 in)	120 mm (4.7 in)	120 mm (4.7 in)
Seat height(1)	658 mm (25.9 in)	658 mm (25.9 in)	668 mm (26.3 in)	648 mm (25.5 in)	653 mm (25.7 in)

(1) With 81.6 kg (180 lb) rider on seat

Table 3. Dimensions: FX Models

ITEM	FXBB	FXBR, FXBRS	FXFB, FXFBS	FXLR	FXDRS
Length	2,320 mm (91.3 in)	2,370 mm (93.3 in)	2,340 mm (92.1 in)	2,355 mm (92.7 in)	2,416 mm (95.1 in)
Overall width	865 mm (34.1 in)	950 mm (37.4 in)	960 mm (37.8 in)	965 mm (38.0 in)	929 mm (36.6 in)
Overall height	1,160 mm (45.7 in)	1,065 mm (41.9 in)	1,110 mm (43.7 in)	1,155 mm (45.5 in)	1,082 mm (42.6 in)

Wheelbase	1,630 mm (64.2 in)	1,695 mm (66.7 in)	1,615 mm (63.6 in)	1,630 mm (64.2 in)	1,737 mm (68.4 in)
Road clearance	125 mm (4.9 in)	115 mm (4.5 in)	120 mm (4.7 in)	130 mm (5.1 in)	134 mm (5.3 in)
Seat height(1)	655 mm (25.8 in)	650 mm (25.6 in)	704 mm (27.7 in)	665 mm (26.2 in)	704 mm (27.7 in)

(1) With 81.6 kg (180 lb) rider on seat

Table 4. Weights: FL Models

ITEM	FLDE	FLFB, FLFBS	FLHC	FLHCS	FLSL	FLSB
Running weight(1)	316 kg (697 lb)	317 kg (699 lb)	328 kg (723 lb)	330 kg (728 lb)	304 kg (670 lb)	317 kg (699 lb)
Maximum added weight allowed(2)	210 kg (463 lb)	216 kg (476 lb)	198 kg (437 lb)	196 kg (432 lb)	222 kg (489 lb)	209 kg (461 lb)
GVWR	526 kg (1,160 lb)	533 kg (1,175 lb)	526 kg (1,160 lb)		526 kg (1,160 lb)	526 kg (1,160 lb)
GAWR front	204 kg (450 lb)	204 kg (450 lb)	204 kg (450 lb)		204 kg (450 lb)	204 kg (450 lb)
GAWR rear	331 kg (730 lb)	345 kg (761 lb)	331 kg (730 lb)		331 kg (730 lb)	331 kg (730 lb)

(1) The total weight of the motorcycle as delivered with all oil/fluids and approximately 90% of fuel.
(2) The total weight of accessories, cargo, riding gear, passenger and rider must not exceed this weight.

Table 5. Weights: FX Models

ITEM	FXBB	FXBR, FXBRS	FXFB	FXFBS	FXLR	FXDRS
Running weight(1)	296 kg (653 lb)	305 kg (672 lb)	305 kg (672 lb)	306 kg (675 lb)	300 kg (661 lb)	303 kg (668 lb)
Maximum added weight allowed(2)	230 kg (507 lb)	228 kg (503 lb)	221 kg (487 lb)	220 kg (485 lb)	226 kg (498 lb)	230 kg (507 lb)
GVWR	526 kg (1,160 lb)	533 kg (1,175 lb)	526 kg (1,160 lb)		526 kg (1,160 lb)	533 kg (1,175 lb)
GAWR front	204 kg (450 lb)	204 kg (450 lb)	204 kg (450 lb)		204 kg (450 lb)	204 kg (450 lb)
GAWR rear	331 kg (730 lb)	345 kg (760 lb)	331 kg (730 lb)		331 kg (730 lb)	345 kg (760 lb)

(1) The total weight of the motorcycle as delivered with all oil/fluids and approximately 90% of fuel.
(2) The total weight of accessories, cargo, riding gear, passenger and rider must not exceed this weight.

WARNING

Do not exceed the motorcycle's Gross Vehicle Weight Rating (GVWR) or Gross Axle Weight Rating (GAWR). Exceeding these weight ratings can lead to component failure and adversely affect stability, handling and performance, which could result in death or serious injury. (00016f)

- GVWR is the sum of the weight of the motorcycle, accessories, and the maximum weight of the rider, passenger and cargo that can be safely carried.
- GAWR is the maximum amount of weight that can be safely carried on each axle.
- The GVWR and GAWR are shown on the information plate, located on the frame down tube.

NOTE

- The maximum additional weight allowed on the motorcycle equals the Gross Vehicle Weight Rating (GVWR) minus the running weight. For example, a motorcycle with GVWR of 544 kg (1,199.30 lb) having a running weight of 363 kg (800.27 lb), would allow a maximum of an additional 181 kg (399.03 lb) combined weight of the rider, passenger, riding gear, cargo and installed accessories.
- For important information regarding tire data and tire inflation, see **Maintenance → INSPECT TIRES AND WHEELS**.

Tire Specifications

WARNING

Match tires, tubes, rim strips or seals, air valves and caps to the correct wheel. Contact a Harley-Davidson dealer. Mismatching can lead to tire damage, allow tire slippage on the wheel or cause tire failure, which could result in death or serious injury. (00023c)

NOTE

ABS equipped motorcycles must always use tires and wheels that are the same as the original equipment. ABS monitors rotational speed of the wheels through individual wheel speed sensors to determine the application of ABS. Changing to different diameter wheels or different size tires can alter the rotational speed. This will upset the system calibration and have an adverse effect on its ability to detect and prevent lockups. Operating with inflation pressure other than those specified can reduce ABS performance.

See Figure 1. The full 17 digit serial or VIN (Vehicle identification number) is stamped on the steering head. In some destinations, a printed VIN label will also be affixed to the right front frame down tube.

An abbreviated VIN is stamped on the left side crankcase at the base of the rear cylinder.

NOTE

Always give the full 17 digit VIN when ordering parts or making any inquiry about your motorcycle.

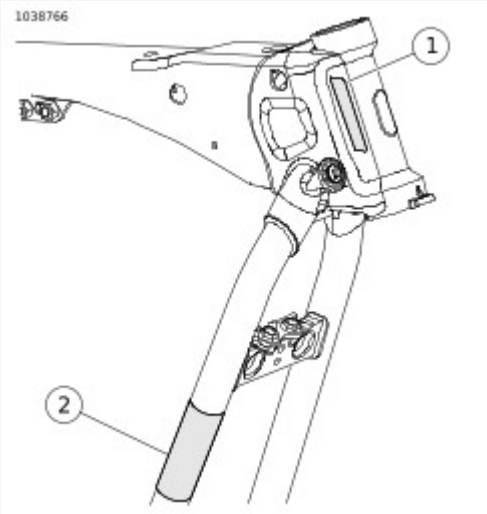

View interactive image

1	Stamped VIN
2	VIN label

Figure 1. VIN Locations

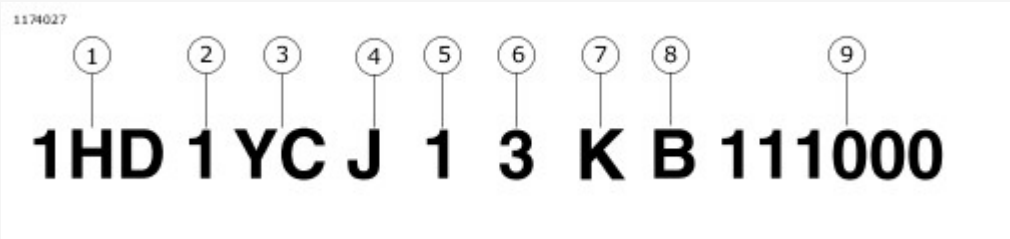

View interactive image

Figure 2. Typical Harley-Davidson VIN: 2019 Softail Models

Table 1. Harley-Davidson VIN Breakdown: 2019 Softail Models

POSITION	DESCRIPTION	POSSIBLE VALUES
1	World manufacturer identifier	1HD=Originally manufactured in the United States 5HD=Originally manufactured in the United States for sale outside of the United States

		932=Originally manufactured in Brazil MEG=Originally manufactured in India MLY=Originally manufactured in Thailand	
2	Motorcycle type	1=Heavyweight motorcycle (901 cm^3 or larger)	
3	Model	See VIN model table	
4	Engine type	J=Milwaukee Eight™ 107 (1753 cm^3) air-cooled, fuel-injected, balanced K=Milwaukee Eight™ 114 (1868 cm^3) air-cooled, fuel-injected, balanced	
5	Calibration/configuration, introduction	**Normal Introduction** 1=Domestic (DOM) 3=California (CAL) A=Canada (CAN) C=HDI E=Japan (JPN) G=Australia (AUS) J=Brazil (BRZ) L=Asia Pacific (APC) N=India (IND) R=ASEAN (AZN) T=China (CHN)	**Mid-year or Special Introduction** 2, 4=Domestic (DOM) 5, 6=California (CAL) B=Canada (CAN) D=HDI F=Japan (JPN) H=Australia (AUS) K=Brazil (BRZ) M=Asia Pacific (APC) P=India (IND) S=ASEAN (AZN) U=China (CHN)
6	VIN check digit	Can be 0-9 or X	
7	Model year	K=2019	
8	Assembly plant	B=York, PA U.S.A. C=Kansas City, MO U.S.A. D=H-D Brazil-Manaus, Brazil (CKD) N=Haryana India (Bawal District Rewari) S=Tasit, Pluagdang, Rayong, Thailand	
9	Sequential number	Varies	

Table 2. VIN Model Codes: 2019 Softail Models

CODE	MODEL	CODE	MODEL
YA	FLHC Heritage Classic	YH	FXBRS Breakout® 114
YB	FLHCS Heritage Classic 114	YJ	FXBB Street Bob®
YC	FLDE Deluxe	YK	FXFB Fat Bob®
YD	FLSL Softail® Slim™	YL	FXFBS Fat Bob® 114
YE	FXBR Breakout®	YM	FLSB Sport Glide®
YF	FLFB Fat Boy®	YN	FXLR Low Rider®
YG	FLFBS Fat Boy® 114	YV	FXDRS FXDR114®

1. Raise front wheel. See **Maintenance → GENERAL → Secure the Motorcycle for Service**.
2. Check wheel bearing end play. See **Chassis → SEALED WHEEL BEARINGS**.
3. Remove front brake caliper(s). See **Chassis → FRONT BRAKE CALIPER**.

NOTE

Do not operate front brake lever with the front brake caliper removed. Without the rotor, brake pressure forces the pistons out of the piston bores. Seating pistons requires caliper disassembly.

1. See **Chassis → FRONT WHEEL → Install → Front Axle Pinch Bolt (Typical)**. Remove front wheel.

NOTE

- ABS models: Never pull wheel speed sensor cable taut or use to retain wheel, axle or other components.
- Keep wheel speed sensor and ABS encoder bearing away from magnetic fields.

a. Loosen pinch bolt (2 or 3) depending on model.

NOTE

FXFB and FXDRS have the pinch bolt (3) coming in from the other side.

b. See **Chassis → FRONT WHEEL → Assemble → Cast Front Wheel (Typical)** or **Chassis → FRONT WHEEL → Assemble → Laced Front Wheel**. Remove front axle (1), left bearing spacer (10) or wheel speed sensor (7) and right bearing spacer (2).

c. Remove front wheel (5).

NOTE

If equipped with a hub cap, the hub cap will come off with the wheel.

Consumables

Description	Part Number	Size
LOCTITE SILVER GRADE ANTI-SEIZE	11100001	20.7 ml (0.7 fl oz)

1. See Chassis → FRONT WHEEL → Assemble → Cast Front Wheel (Typical)or Chassis → FRONT WHEEL → Assemble → Laced Front Wheel. Install front wheel.
   a. Apply a light coat of ANTI-SEIZE LUBRICANT to front axle (1), wheel bearing bores and bore of the inner wheel bearing spacer (4).
      LOCTITE SILVER GRADE ANTI-SEIZE (11100001)
   b. Position front wheel (5) between front forks.
   c. See Chassis → FRONT WHEEL → Assemble → Cast Front Wheel (Typical) or Chassis → FRONT WHEEL → Assemble → Laced Front Wheel. Install front axle through right fork, right bearing spacer (2), front wheel, left bearing spacer (10) or wheel speed sensor (7).

      NOTE

      See Chassis → FRONT WHEEL → Install → Front Wheel Speed Sensor Index Pin (ABS equipped). Position wheel speed sensor (1) with index pin (2) contacting fork.

      NOTE

      Models with a hub cap assembly (11) will not have a right bearing spacer (2), use hub cap assembly in place of right bearing spacer.

   d. Thread the front axle into the left fork. Tighten.
      Torque: 94.9–101.6 N·m (70–75 ft-lbs) *Front wheel axle*
2. See Chassis → FRONT WHEEL → Install → Front Axle Pinch Bolt (Typical). Tighten pinch bolt.
   a. **Bottom mount pinch bolt:**
      Torque: 15–20 N·m (11–15 ft-lbs) *Front fork bottom mount pinch bolt*
   b. **Side mount pinch bolt:**
      Torque: 28–34 N·m (21–25 ft-lbs) *Front fork side mount pinch bolt*

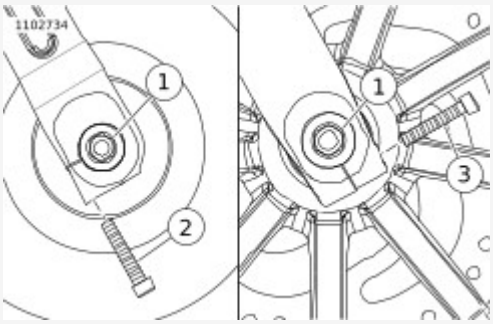

View interactive image

1	Front axle
2	Front axle pinch bolt, bottom mount
3	Front axle pinch bolt, side mount

Figure 1. Front Axle Pinch Bolt (Typical)

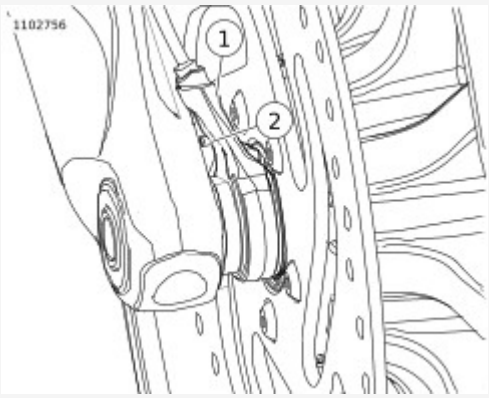

View interactive image

1	Wheel speed sensor
2	Wheel speed sensor index pin

Figure 2. Front Wheel Speed Sensor Index Pin (ABS equipped)

1. See **Chassis → FRONT WHEEL → Assemble → Laced Front Wheel**. Disassemble hub cap assembly if equipped.
   a. Remove and discard retaining ring from hub cap assembly (11).
   b. Remove hub spacer from hub cap.
2. See **Chassis → FRONT WHEEL → Assemble → Cast Front Wheel (Typical)** or **Chassis → FRONT WHEEL → Assemble → Laced Front Wheel**. Remove front brake disc(s).
   a. Remove and discard screws (9).
   b. Remove front brake disc(s) (8).
3. Remove front tire. See **Chassis → TIRES**.
4. Remove valve stem. See **Chassis → TIRES**.
5. Remove and discard sealed wheel bearings. See **Chassis → SEALED WHEEL BEARINGS**.
6. See **Chassis → FRONT WHEEL → Assemble → Cast Front Wheel (Typical)** or **Chassis → FRONT WHEEL → Assemble → Laced Front Wheel**. Remove wheel bearing inner spacer (4).
7. See **Chassis → FRONT WHEEL → Assemble → Laced Front Wheel**. **FXBB:** Remove screws (13) and hub cap (12).

1. Clean all parts thoroughly.
2. Inspect front wheel for damage. Replace or repair as necessary.
3. Check wheel lateral and radial runout before installing a new tire.
   See **Chassis → CHECKING AND TRUING WHEELS**.

1. Install **new** valve stem. See Chassis → TIRES.
2. Install tire. See Chassis → TIRES.
3. See Chassis → FRONT WHEEL → Assemble → Cast Front Wheel (Typical) or Chassis → FRONT WHEEL → Assemble → Laced Front Wheel. Install wheel bearing inner spacer (4).
4. Install **new** wheel bearings. See Chassis → SEALED WHEEL BEARINGS.
5. See Chassis → FRONT WHEEL → Assemble → Laced Front Wheel. **FXBB:** Install hub cap.
   a. Align holes on hubcap (12) with holes on the right side of front wheel.
   b. Install screws (13). Tighten.
      Torque: 22–33 N·m (16–24 ft-lbs) *FXBB: Hub cap screw*

NOTICE

Do not re-use brake disc/rotor screws. Re-using these screws can result in torque loss and damage to brake components. (00319c)

6. See Chassis → FRONT WHEEL → Assemble → Cast Front Wheel (Typical) or Chassis → FRONT WHEEL → Assemble → Laced Front Wheel. Install front brake disc(s).
   a. Align front brake disc(s) (8) with mounting holes in front wheel (5).
   b. Install **new** screws (9). Tighten.
      Torque: 22–33 N·m (16–24 ft-lbs) *Front brake disc screw*

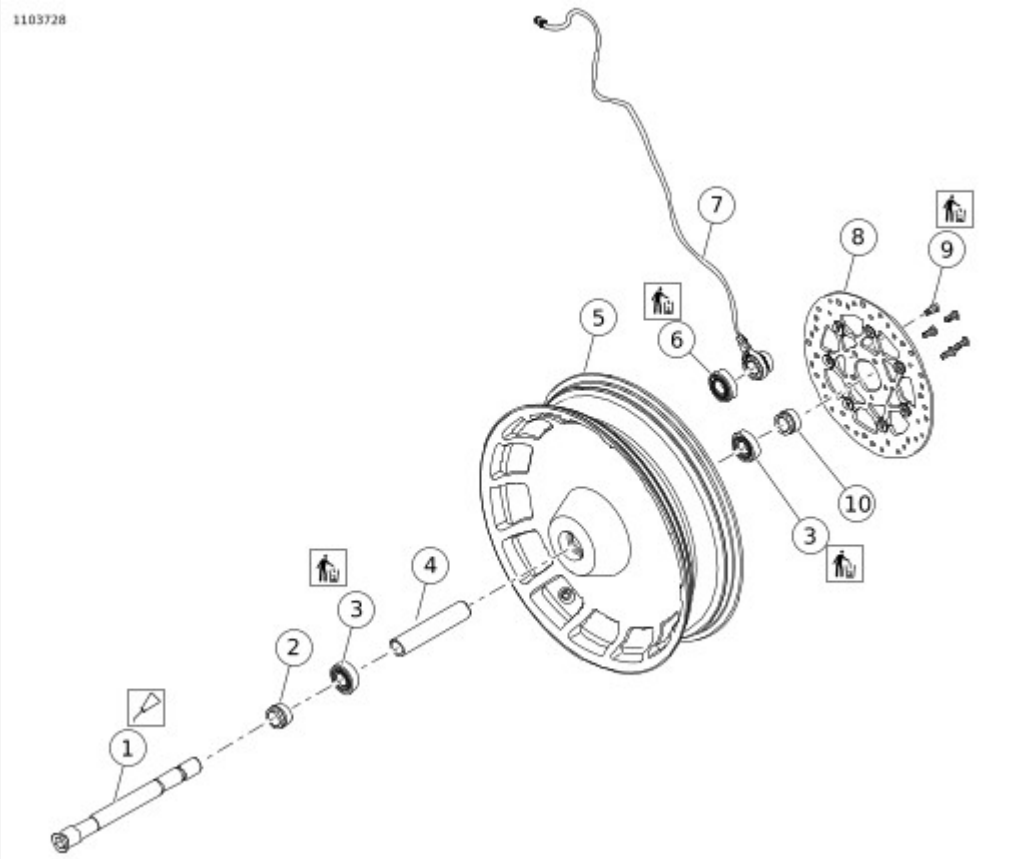

View interactive image

1	Front axle
2	Right bearing spacer
3	Wheel bearing (2)
4	Inner wheel bearing spacer
5	Wheel
6	Wheel bearing (ABS encoder)
7	Wheel speed sensor (ABS)
8	Brake disc
9	Brake disc screw (5)
10	Left bearing spacer

Figure 1. Cast Front Wheel (Typical)

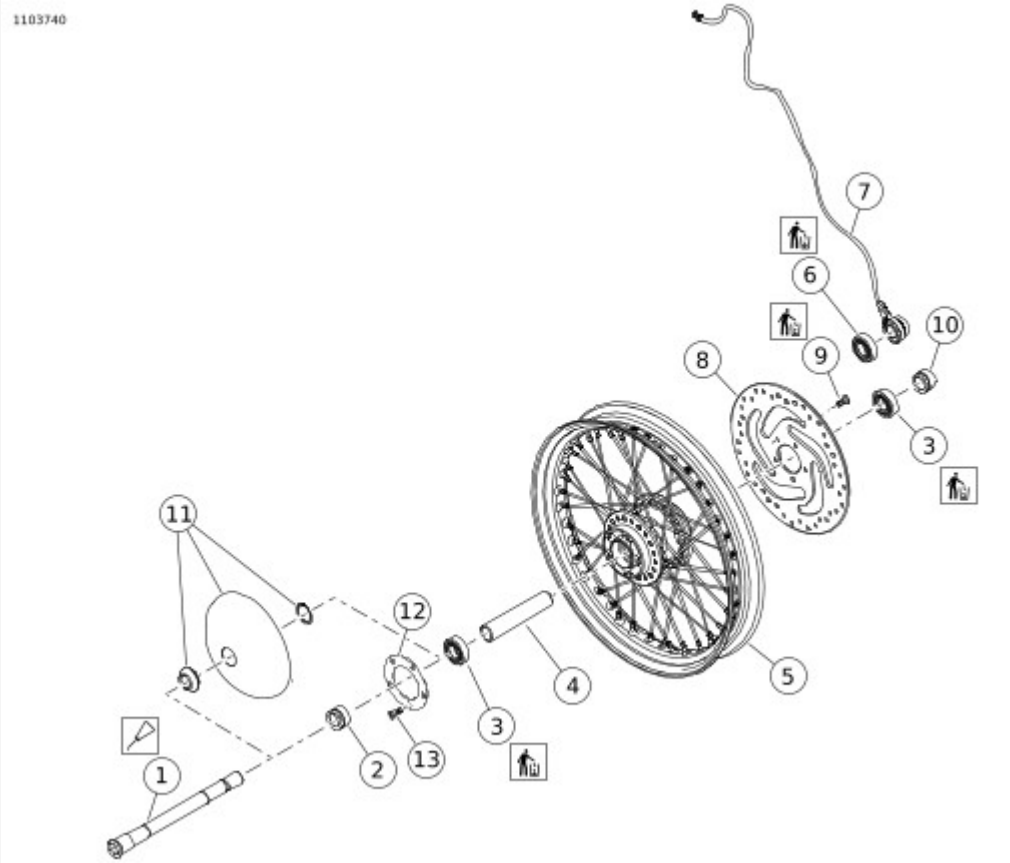

View interactive image

1	Front axle

2	Right bearing spacer
3	Wheel bearing (2)
4	Inner wheel bearing spacer
5	Wheel
6	Wheel bearing (ABS encoder)
7	Wheel speed sensor (ABS)
8	Brake disc
9	Brake disc screw (5)
10	Left bearing spacer
11	Hub spacer, hub cap and retaining ring
12	Hub cap (FXBB)
13	Screw (5)

Figure 2. Laced Front Wheel

1. Install caliper(s). See **Chassis → FRONT BRAKE CALIPER**
2. Lower front wheel. See **Maintenance → GENERAL → Secure the Motorcycle for Service**.

1. Remove main fuse. See Electrical → POWER DISCONNECT.
2. Remove saddlebags, if equipped. See Chassis → SADDLEBAGS.
3. Measure wheel alignment. See Chassis → WHEEL ALIGNMENT.
4. Remove belt guards, if necessary. See Chassis → BELT GUARDS.
5. **FXDRS:** Remove rear lighting bracket, if necessary. See Chassis → REAR LIGHTING BRACKET.
6. Remove muffler, if necessary. See Fuel and Exhaust → MUFFLERS.
7. Raise rear wheel. See Maintenance → GENERAL → Secure the Motorcycle for Service.
8. Check wheel bearing end play. See Chassis → SEALED WHEEL BEARINGS.
9.

   NOTE

   Do not operate rear brake pedal with the rear brake caliper removed. Without the rotor, brake pressure forces the pistons out of the piston bores. Seating pistons requires caliper disassembly.

   Remove rear brake caliper. See Chassis → REAR BRAKE CALIPER.

Special Tools

Description	Part Number	Qty.
AXLE NUT TORQUE ADAPTER	HD-47925	1

1. See **Chassis → REAR WHEEL → Install → Rear Wheel (Typical)**. Remove rear wheel.
   a. Remove E-clip (13).
   b. Loosen axle nut (12) using axle nut torque adapter.

      Special Tool: **AXLE NUT TORQUE ADAPTER** (HD-47925)

   c. Loosen axle adjuster screws (10) and slide rear wheel forward.
   d. Remove axle nut and washer (11) or cam (17).
   e. Support brake caliper bracket (2).
   f. Remove rear axle (9 or 18), right outer spacer (1), right inner spacer (3) or WSS (4) and left spacer (6).

NOTE
FXDRS: does not have a right outer spacer.

   g. Remove drive belt from rear sprocket (8).
   h. Remove rear wheel assembly.

Consumables

Description	Part Number	Size
LOCTITE SILVER GRADE ANTI-SEIZE	11100001	20.7 ml (0.7 fl oz)

1. See **Figure 1**. Install rear wheel.
   a. Apply a light coat of anti-seize lubricant to rear axle (9 or 18), wheel bearing bores, and bore of wheel bearing spacer (16).
   LOCTITE SILVER GRADE ANTI-SEIZE (11100001)
   b. Position rear wheel between rear fork.
   c. Install rear axle through left spacer (6), left leg of rear fork, and rear sprocket (8).
   d. Install rear axle through rear wheel.
   e. Install rear axle through right inner spacer (3) or WSS (4), caliper bracket (2), right outer spacer (1) and right leg of rear fork.

NOTE
FXDRS: Does not have a right outer spacer.

   f. Install washer (11) or cam (17).
   g. Install axle nut (12). Hand-tighten.
   h. Slide rear axle forward. Install drive belt on front and rear sprockets.
2. See **Figure 2**. Rotate WSS to position shown, if equipped. Verify wire harness is routed correctly.
3. Align rear wheel. See **Chassis → WHEEL ALIGNMENT**.
4. Adjust drive belt deflection. See **Maintenance → INSPECT AND ADJUST DRIVE BELT AND SPROCKETS**.
5. Verify drive belt tracking properly.

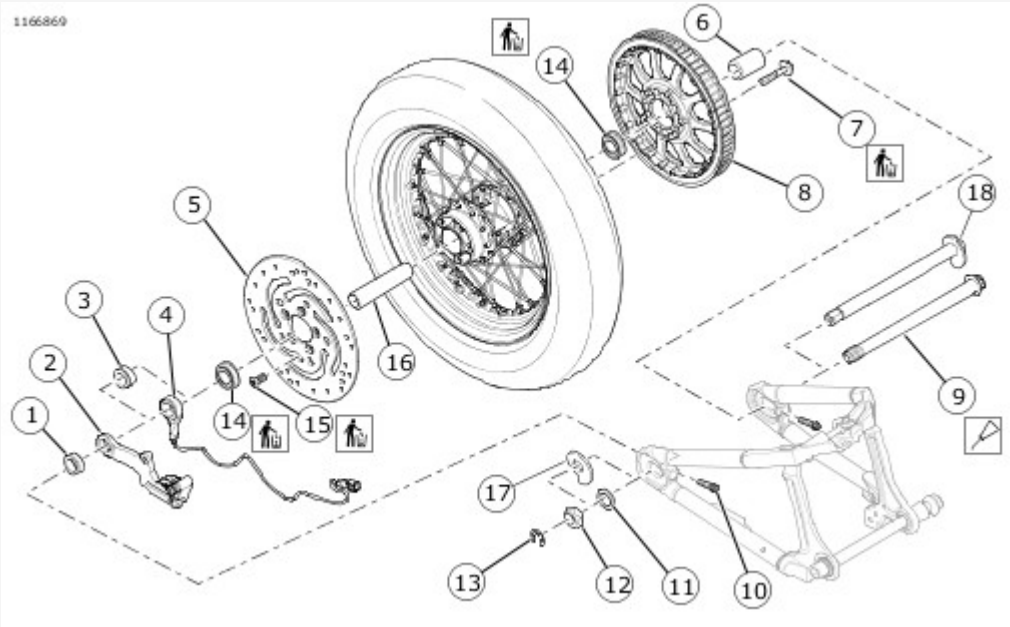

View interactive image

1	Right outer spacer (all except FXDRS)
2	Brake caliper bracket
3	Right inner spacer, non ABS
4	WSS (Wheel speed sensor)
5	Brake disk (typical)
6	Left spacer
7	Sprocket screw (5)
8	Rear sprocket
9	Rear axle (all except FXDRS)
10	Adjuster screw (2) (all except FXDRS)
11	Washer (all except FXDRS)
12	Axle nut
13	E-clip
14	Wheel bearing (2)
15	Brake disk screw (5)
16	Wheel bearing spacer
17	Cam (FXDRS)
18	Rear axle (FXDRS)

Figure 1. Rear Wheel (Typical)

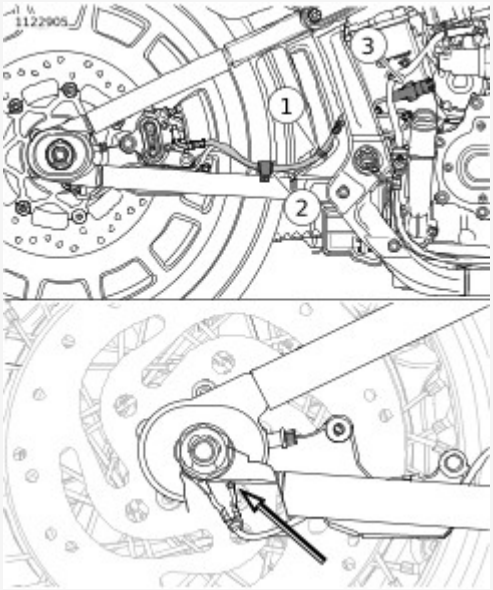

View interactive image

1	Clip (all except FXDRS)
2	Clamp (all except FXDRS)
3	Connector

Figure 2. Rear Wheel Speed Sensor Orientation

1. See **Chassis → REAR WHEEL → Install → Rear Wheel (Typical)**. Remove rear brake disc.
    a. Discard brake disk screws (15).
    b. Remove rear brake disc (5).
2. Remove rear sprocket.
    a. Discard rear sprocket screws (7)
    b. Remove rear sprocket (8).
3. Remove rear tire. See **Chassis → TIRES**.
4. Remove valve stem. See **Chassis → TIRES**.
5. If necessary, remove and discard sealed wheel bearings. See **Chassis → SEALED WHEEL BEARINGS**.

1. Clean all parts thoroughly.
2. Inspect rear wheel for damage. Replace or repair as necessary.
3. Check wheel runout. See **Chassis → CHECKING AND TRUING WHEELS**.

1. Install **new** valve stem. See **Chassis → TIRES**.
2. Install tire. See **Chassis → TIRES**.
3. Install wheel bearing spacer (16), if removed.
4. See **Chassis → REAR WHEEL → Install → Rear Wheel (Typical)**. Install **new** sealed wheel bearings (14), if removed. See **Chassis → SEALED WHEEL BEARINGS**.

NOTICE

Do not re-use sprocket mounting screws. Re-using sprocket mounting screws can result in torque loss and damage to the sprocket and/or belt assembly. (00480b)

5. Install rear sprocket.
   a. Align rear sprocket (8) with mounting holes in rear wheel.
   b. Install **new** sprocket screws (7). Tighten using the following sequence.
   c. Tighten screws to initial torque.
      Torque: 81.3 N·m (60 ft-lbs) *Rear sprocket screws, first torque*
   d. Back off screws one-half turn (180 degrees).
   e. Tighten screws to final torque.
      Torque: 104.4–112.5 N·m (77–83 ft-lbs) *Rear sprocket screws, final torque*

NOTICE

Do not re-use brake disc/rotor screws. Re-using these screws can result in torque loss and damage to brake components. (00319c)

6. Install rear brake disc.
   a. Align rear brake disc (5) with mounting holes in rear wheel.
   b. Install **new** brake disk screws (15). Tighten
      Torque: 40.7–61 N·m (30–45 ft-lbs) *Rear brake disc screws*

1. Lower rear wheel. See **Maintenance → GENERAL → Secure the Motorcycle for Service**.
2. Install muffler, if removed. See **Fuel and Exhaust → MUFFLERS**.
3. Install belt guards, if removed. See **Chassis → BELT GUARDS**.
4. Install saddlebags, if removed. See **Chassis → SADDLEBAGS**.
5. Install main fuse. See **Electrical → POWER DISCONNECT**.

NOTE

- See Figure 1. The following procedure is valid for wheels that use an angle flange hub regardless of rim style or diameter.
- Disc mounting surface for primary brake side of hub has one or two grooves.

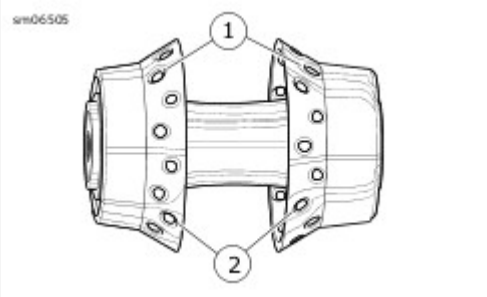

View interactive image

1	Outer spoke hole
2	Inner spoke hole

Figure 1. Angle Flange Hub

1. Place hub on workbench:
   a. **Front:** primary brake side up.
   b. **Rear:** brake side down.
2. Install all spokes in the lower flange.
3. See Figure 2. Flip hub over. Gather all outer spokes and hold upright with a rubber band. Repeat with the inner spokes using a second rubber band.
4. Install spokes in remaining flange.
5. Rotate the lower flange spokes as far as they go:
   a. Outer spokes clockwise.
   b. Inner spokes counterclockwise.
6. Center the rim over the hub and spokes assembly and support on wooden blocks approximately 38.1 mm (1.5 in) thick.
   a. If valve is not located in the center of the rim, place valve hole facing up.
   b. If the valve is located in the center of the rim, it can be placed either side up.

NOTE

Install nipples until approximately 3.2 mm (⅛ in) of spoke thread shows.

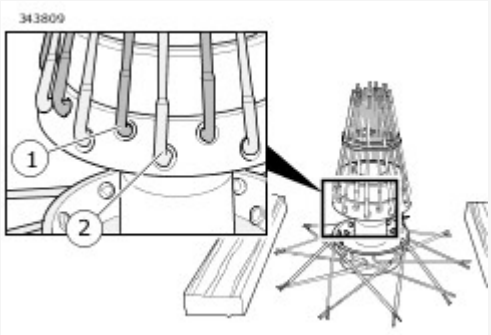

View interactive image

1	Outer spoke
2	Inner spoke

Figure 2. Spokes Gathered

7. Install lower flange outer spokes and loosely install spoke nipples:
    a. **Rim with side valve hole:** See Figure 3. Start at the valve stem hole (1).
    b. **Rim with center valve hole:** See Figure 4. Start at the first hole counterclockwise (1) from valve stem hole.

8. Install remaining outer spokes in every fourth hole.
9. Install lower flange inner spokes and loosely install spoke nipples:
    a. Starting at the second hole counterclockwise (2) from first spoke installed, install inner spoke.
    b. Install remaining inner spokes in every fourth hole.
10. Carefully release upper flange inner spokes and fan out around rim, rotating them clockwise.
11. Starting at the first hole counterclockwise (3) from first spoke installed, install inner spoke. Install remaining inner spokes in every fourth hole.
12. Carefully release upper flange outer spokes and fan out around rim, rotating them counterclockwise.
13. Install outer spokes in remaining holes (4).
14. Verify that spoke heads are seated. See Chassis → CHECKING AND TRUING WHEELS.
    a. Evenly hand-tighten spoke nipples until snug.
    b. Only tighten until slack is removed.
    c. Proper torque is applied when the wheel is trued.
    d. Adjust offset and true the wheel.

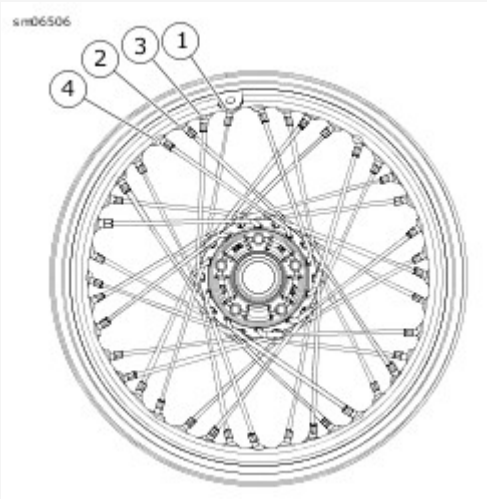

View interactive image

Figure 3. Side Valve Rim

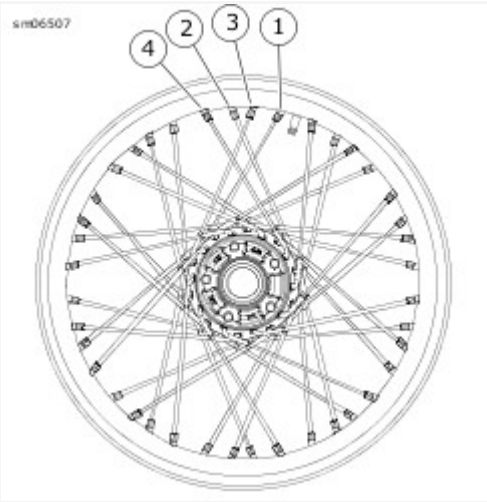

View interactive image

Figure 4. Center Valve Rim

Check wheels for lateral and radial runout before installing a **new** tire, tube or rim seal. Checking cast or laced wheels is performed using the same procedure.

Laced wheels having excess runout can be trued. However, cast wheels must be replaced. Never attempt to straighten cast wheels.

Always check condition of the wheel bearings before checking or adjusting wheel runout. See **Chassis → SEALED WHEEL BEARINGS**.

Special Tools

Description	Part Number	Qty.
WHEEL TRUING STAND	HD-99500-80	1

Check wheels for both radial runout and lateral runout. If either measurement is not within specification:

- **Cast wheel:** Replace the wheel.
- **Laced wheel:** Adjust spokes to true the wheel. See steps in this section.

Checking Radial Runout

1. See Figure 1. Mount wheel in WHEEL TRUING STAND (Part Number:HD-99500-80).
2. Adjust gauge rod or dial indicator to the rim's tire bead safety hump.
3. Rotate wheel and measure distance at several locations. Runout must not exceed 0.76 mm (0.030 in).

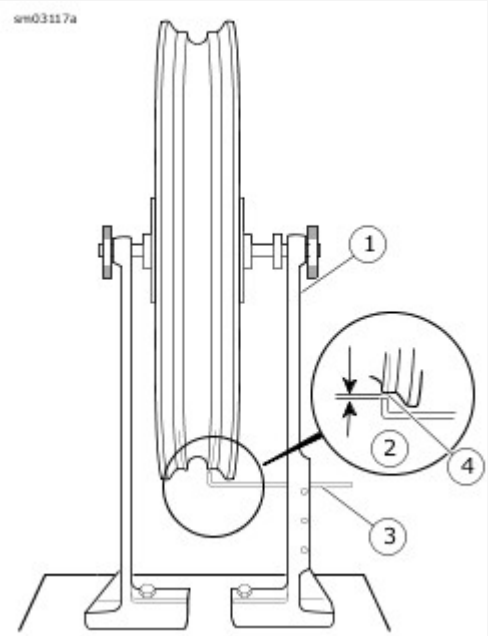

View interactive image

1	Wheel truing and balancing stand
2	Radial runout
3	Gauge rod
4	Bead safety hump

Figure 1. Checking Radial Runout

Checking Lateral Runout

1. See Figure 2. Mount wheel in WHEEL TRUING STAND (Part Number:HD-99500-80).

NOTE

Dial indicators are more accurate than gauge rods.

2. Place a gauge rod near, or dial indicator on the rim bead flange.
3. Measure distance at several locations. Lateral runout must not exceed 0.76 mm (0.030 in).

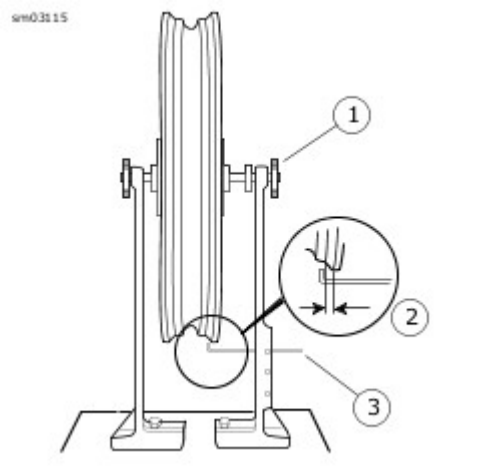

View interactive image

1	Wheel truing and balancing stand
2	Lateral runout
3	Gauge rod

Figure 2. Checking Lateral Runout

Special Tools

Description	Part Number	Qty.
SPOKE WRENCH	HD-94681-80	1
WHEEL TRUING STAND	HD-99500-80	1

1. See Figure 1. Prepare rim.
   a. Place a piece of tape to mark the center of each group of four spokes as shown.
   b. Mark groups directly opposite one another and approximately 90 degrees apart.
   c. Use different colors of tape or number each group.

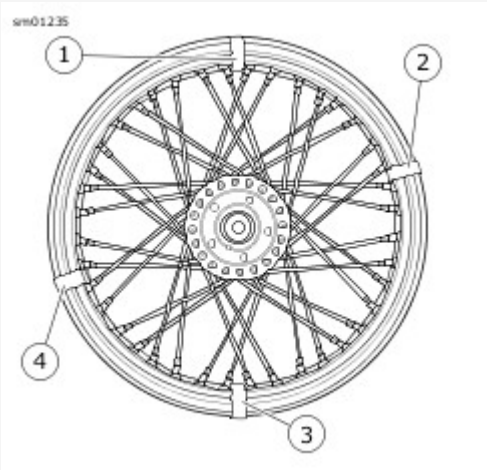

View interactive image

Figure 1. Marking Spoke Groups

2. See Figure 2. Mount wheel in WHEEL TRUING STAND (Part Number:HD-99500-80) so hub turns freely on its bearings.

NOTE

Disc mounting surface for primary brake side of hub has one or two grooves.

3. Measure offset.
   a. Lay a straightedge across the primary brake disc mounting surface and one of the marked spoke groups.
   b. See Figure 3. Measure the distance from the straightedge to the location shown to determine distance A.
   c. Compare to dimensions in Table 1.

NOTE

- Always loosen the appropriate spokes before tightening the other two. Reversing this procedure causes the rim to become out-of-round. For example: If the **right** side is **less** than specification, **loosen** the two spokes on the hub **right** side. Then **tighten** the two spokes attached to the hub **left** side.
- Tighten or loosen spokes one flat at a time and recheck measurement.
- Always work on groups that are opposite each other to maintain radial runout.

4. If the dimension is not correct, adjust the four spokes using SPOKE WRENCH (Part Number:HD-94681-80). Turn all four

spokes an equal number of turns until offset is at specification.

5. Repeat the previous step for all groups on the wheel.
6. Check wheel runout. See [Chassis → CHECKING AND TRUING WHEELS → True Laced Wheels](#).

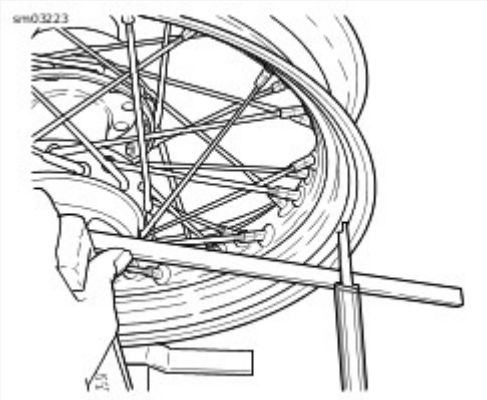

View interactive image

Figure 2. Checking Wheel Hub Offset Dimension (Typical)

Table 1. Laced Wheel Offset Dimensions

MODEL	SIZE	WHEEL	IN	MM
FLDE, FLSL, FLHC, FLHCS	16 x 3	Front	1.267-1.297	32.18-32.94
FXBB	19 x 2.5	Front	1.258-1.288	31.95-32.72
FLDE, FLSL, FXBB, FLHC, FLHCS	16 x 3	Rear	1.387-1.417	35.23-35.99

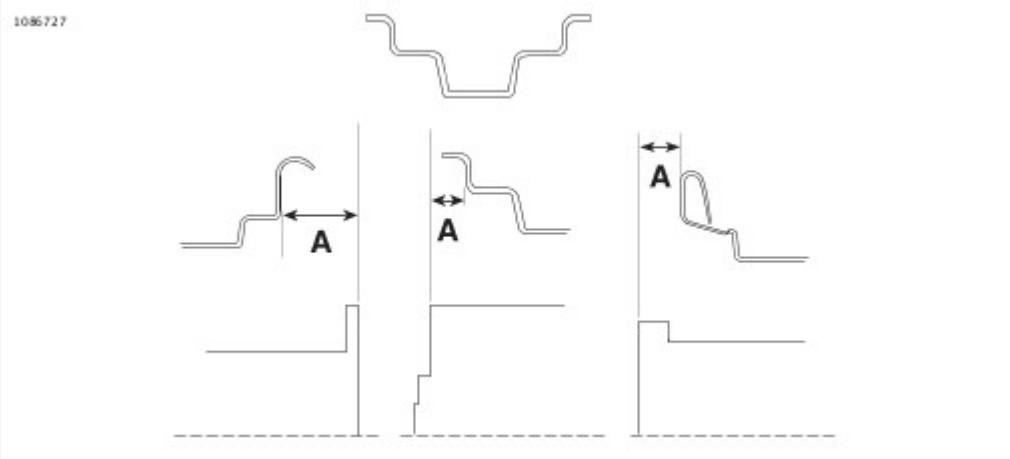

View interactive image

Figure 3. Laced Wheel Hub Offset Dimensions

Special Tools

Description	Part Number	Qty.
SPOKE TORQUE WRENCH	HD-48985	1
SPOKE WRENCH	HD-94681-80	1
WHEEL TRUING STAND	HD-99500-80	1

NOTE

- Dial indicators are more accurate than gauge rods.
- Perform radial truing before lateral truing.

Adjust Radial Runout

1. See Figure 1. Mount wheel in WHEEL TRUING STAND (Part Number:HD-99500-80).
2. Adjust the gauge rod (3) near to the tire bead safety hump (4). If using a dial indicator, place the tip on the safety bead hump.
3. **Straight flange hub:** Seat each spoke head in the hub flange using a flat nose punch and mallet.

NOTE

- Always loosen the appropriate spokes before tightening the other two. Reversing this procedure causes the rim to become out of round.
- Tighten or loosen spoke. Then recheck measurement. Small changes in the spokes can make large changes in the runout.
- Always work on groups that are opposite each other to maintain radial runout.

4. Spin the rim slowly. Check radial runout (2). The rim must be true within 0.76 mm (0.030 in).
   a. Use SPOKE WRENCH (Part Number:HD-94681-80).
   b. If the rim contacts the gauge on or near a marked group of spokes, loosen the spokes in the group on the opposite side of the rim. Then tighten the spokes in the group where the rim makes contact an equal number of turns.
   c. If the rim contacts the gauge between two marked groups, loosen the spokes in both groups on the opposite side of the rim. Then tighten the spoke groups on the side of the rim that makes contact an equal number of turns.
5. When the wheel is true, start at the valve stem hole and tighten any loose spoke nipples one turn at a time until they are snug.
6. Working alternately across the wheel, use SPOKE TORQUE WRENCH (Part Number:HD-48985) evenly tighten all spokes to specification listed in Table 1.
7. **Straight flange hub:** Verify that each spoke head is seated in the hub flange using a flat nose punch and mallet.
8. Verify that radial runout is still within specification.
9. Proceed to lateral runout.

WARNING

Spokes that are too tight can draw nipples through the rim or distort hub flanges. Spokes that are too loose can continue to loosen when put in service. Either condition can adversely affect stability and handling, which could result in death or serious injury. (00286a)

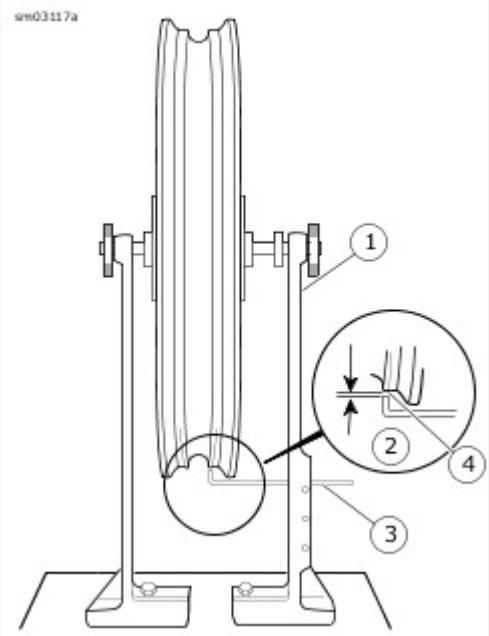

View interactive image

1	Wheel truing and balancing stand
2	Radial runout
3	Gauge rod
4	Bead safety hump

Figure 1. Checking Radial Runout

Table 1. Spoke Nipple Torque Specification

RIM TYPE	MINIMUM TORQUE
All	6.2 N·m (55 **in-lbs**)

Adjust Lateral Runout

NOTE

Dial indicators are more accurate than gauge rods.

1. See **Figure 2**. Adjust the gauge rod (3) near to the rim bead flange. If using a dial indicator, place the tip against the bead flange.
2. Rotate the rim slowly to check lateral runout (2). If runout exceeds 0.76 mm (0.030 in), adjust spokes:

NOTE

- Always loosen the appropriate spokes before tightening the other two. Reversing this procedure causes the rim to become out of round.

- Tighten or loosen spoke. Then recheck measurement. Small changes in the spokes can make large changes in the runout.
- Always work on groups that are opposite each other to maintain radial runout.

3. Working in groups of four, loosen two spokes on the tight side and tighten the two spokes on the loose side.
4. Repeat with each group until wheel is within specification.
5. Verify that all spoke nipples are tightened to the specification. Refer to **Table 1**.
6. File or grind off ends of spokes that protrude through the nipples to prevent puncturing tube or rim seal.

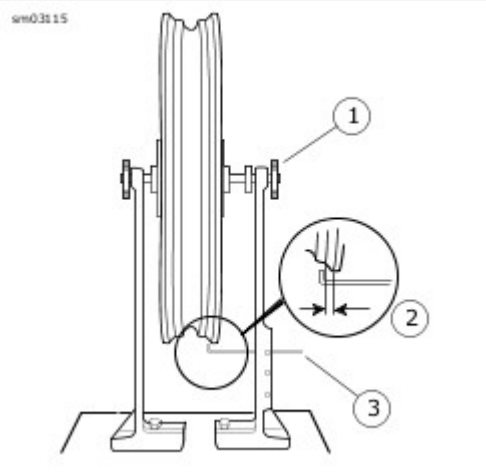

View interactive image

1	Wheel truing and balancing stand
2	Lateral runout
3	Gauge rod

Figure 2. Checking Lateral Runout

1. Raise front or rear wheel. See **Maintenance → GENERAL → Secure the Motorcycle for Service**.

NOTICE

When lifting a motorcycle using a jack, be sure jack contacts both lower frame tubes where down tubes and lower frame tubes converge. Never lift by jacking on cross-members, oil pan, mounting brackets, components or housings. Failure to comply can cause serious damage resulting in the need to perform major repair work. (00586d)

1. Turn the wheel through several rotations.

NOTE

- When checking end play, pull or push on the wheel not the brake disc. Pulling or pushing brake disc can distort disc causing a false end play reading.

2. Check end play:
   a. See Figure 1. Mount a magnetic base dial indicator to the brake disc. Set the indicator contact point on the end of the axle.
   b. Firmly push the wheel to one side. Zero the dial indicator gauge.
   c. Firmly pull the wheel back. Note the reading of the dial indicator.
   d. Repeat the procedure to verify the reading.
   e. Replace the bearings if end play exceeds 0.051 mm (0.002 in) or if there is drag, rough rotation or abnormal noise.

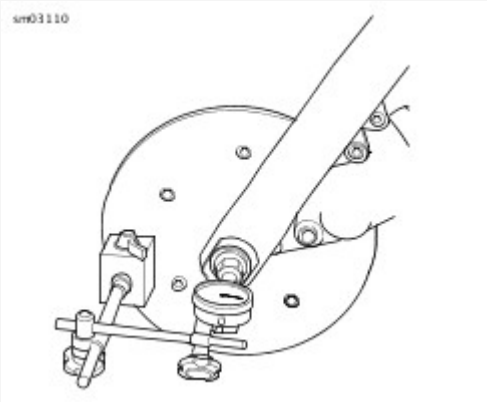

View interactive image

Figure 1. Measuring Lateral End Play (Front Wheel) (Typical)

Special Tools

Description	Part Number	Qty.
WHEEL BEARING INSTALLER/REMOVER	HD-44060D	1

1. Remove wheel. See **Chassis → FRONT WHEEL** or **Chassis → REAR WHEEL**.
2. See **Figure 1**. Assemble **WHEEL BEARING INSTALLER/REMOVER (Part Number:HD-44060D)**.
   a. Lubricate draw down bolt or a suitable threaded rod with two locking nuts.
   b. Install nut (2), washer (3) and bearing (4) on screw.
   c. Insert assembly through hole in bridge (6).
   d. Install ball bearing inside collet (5). Fasten collet and ball bearing to forcing screw (1).
3. Remove bearings.
   a. See **Figure 1**. Hold end of forcing screw (1) and turn collet (5) to expand edges of collet.
   b. See **Figure 2**. Hold end of forcing screw (1) and turn nut (2) to remove bearing from wheel.
   c. Remove spacer from inside wheel hub.
   d. Repeat on opposite side.
4. Discard all bearings.

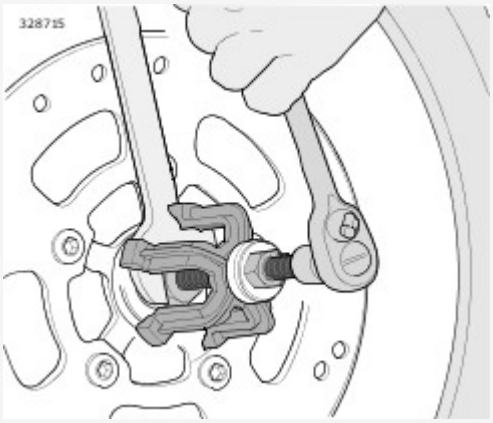

View interactive image

1	Forcing screw
2	Nut
3	Washer
4	Bearing
5	Collet with ball bearing
6	Bridge

Figure 1. Gripping Bearing

View interactive image

1	Forcing screw
2	Nut

Figure 2. Removing Bearing

Special Tools

Description	Part Number	Qty.
WHEEL BEARING INSTALLER/REMOVER	HD-44060D	1

NOTE

- **Front wheel:** Install bearing on the brake disc or left side first.
- **Rear wheel:** Install bearing on the brake disc or right side first.
- Install ABS bearing on the brake disc side of the wheel.

1. See Figure 1. Assemble wheel bearing installer/remover.

   Special Tool: WHEEL BEARING INSTALLER/REMOVER (HD-44060D)

   a. Lubricate draw down bolt or a suitable threaded rod with two locking nuts.
   b. Insert threaded rod (1) through support plate (2).
   c. Insert assembly through wheel.
   d. Place **new** bearing on threaded rod (1).

   NOTE

   - Bearing orientation is important.
   - **Standard bearing:** Lettered side against pilot (6).
   - **ABS bearing:** Red side against wheel.

   e. Install pilot (6), bearing (5), washer (4) and nut (3) over rod.

   NOTICE

   Replace both bearing assemblies even if one assembly appears to be good. Mismatched bearings can lead to excessive wear and premature replacement. (00532c)

2. Install bearings.
   a. Hold hex end of threaded rod (1) and turn nut (3).
   b. Bearing is fully seated when nut can no longer be turned.
   c. Remove tool.
   d. Install spacer sleeve inside wheel hub.
   e. Reverse tool.
   f. Install opposite side bearing.
3. Install wheel. See Chassis → FRONT WHEEL or Chassis → REAR WHEEL.

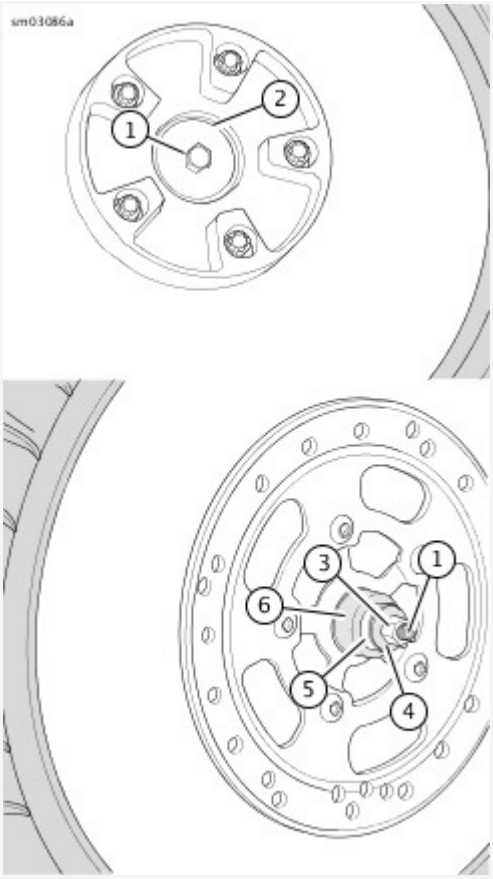

View interactive image

1	Threaded rod
2	Support plate
3	Nut
4	Washer
5	Bearing
6	Pilot

Figure 1. Installing Wheel Bearing

1. Lower wheel.

WARNING

Be sure tires are properly inflated, balanced, undamaged, and have adequate tread. Inspect your tires regularly and see a Harley-Davidson dealer for replacements. Riding with excessively worn, unbalanced, improperly inflated, overloaded or damaged tires can lead to tire failure and adversely affect stability and handling, which could result in death or serious injury. (00014b)

Always maintain proper tire pressure. See **Maintenance → INSPECT TIRES AND WHEELS**. Do not load tires beyond GAWR. Refer to tables in **Chassis → SPECIFICATIONS**. Underinflated, over-inflated or overloaded tires can fail.

NOTE

- Check runout on wheel before installing a **new** tire. See **Chassis → CHECKING AND TRUING WHEELS**.
- Store **new** tires on a horizontal tire rack. Storing in a vertical stack compresses the tires and closes the beads.
- Inspect tires for punctures, cuts, breaks and wear at least weekly.
- See **Figure 1**. The tread wear indicators appear when 0.8 mm (1⁄32 in) or less tread remains. Always replace tires before tread is worn to the indicators.

Replace tire if:

- Tread is worn to the tire wear indicators.
- Tire cords or fabric are visible.
- Tire has a bump, bulge or split.
- Puncture that cannot be repaired.

Refer to **Maintenance → INSPECT TIRES AND WHEELS** for recommended tires.

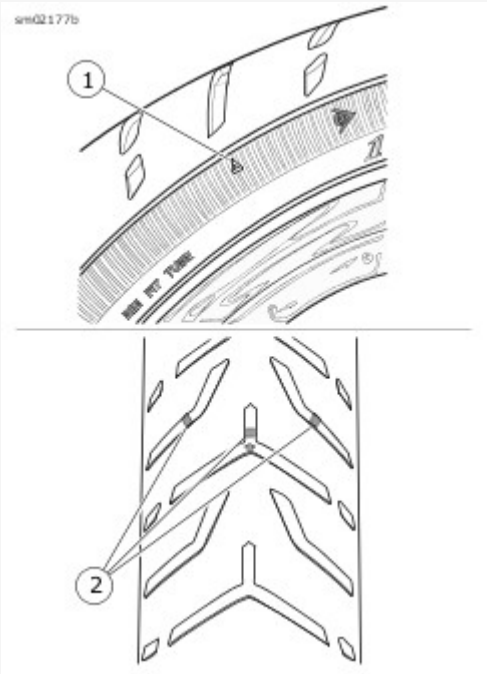

View interactive image

1	Sidewall
2	Tread surface

Figure 1. Tread Wear Indicators (Typical)

NOTE

ABS models must use properly inflated tires and wheels that are the same as the original equipment. The ABS monitors rotational speed of the wheels through individual wheel speed sensors to determine the application of ABS.

Different diameter wheels or tires can:

- Alter the rotational speed which can upset the calibration of the ABS.
- Adversely affect its ability to detect and prevent lockups.

Operating with over- or under-inflated tires can reduce ABS performance.

1. Remove wheel. See **Chassis → FRONT WHEEL** or **Chassis → REAR WHEEL**.
2. Check wheels for lateral and radial runout. See **Chassis → CHECKING AND TRUING WHEELS → Checking Wheel Runout**.

NOTE

Take care when replacing tire to prevent cosmetic damage to wheel.

1. Deflate tire.
2. Loosen both tire beads from rim flange.
3. Remove tire.

1. Clean.
    a. Clean the inside of tire and outer surface of tube.
    b. Clean rim bead area with a stiff wire brush.
2. Inspect.
    a. Verify that wheel is true. See **Chassis → CHECKING AND TRUING WHEELS**.
    b. Check tire tread depth.
    c. Inspect tire for punctures or tears. Small punctures can be repaired.

WARNING

Replace punctured or damaged tires. In some cases, small punctures in the tread area may be repaired from within the removed tire by a Harley-Davidson dealer. Speed should NOT exceed 80 km/h (50 mph) for the first 24 hours after repair, and the repaired tire should NEVER be used over 129 km/h (80 mph). Failure to follow this warning could lead to tire failure and result in death or serious injury. (00015b)

3. Repair.
    a. Patch inner tubes only as an emergency measure. Replace a damaged or patched tube as soon as possible.
    b. Repair tread on tubeless tires if puncture is 6.4 mm (¼ in) or smaller.
    c. Make repairs from inside the tire.
    d. Always combine a patch and plug when repairing tire.

WARNING

Harley-Davidson recommends the use of its specified tires. Harley-Davidson vehicles are not designed for operation with non-specified tires, including snow, moped and other special-use tires. Use of non-specified tires can adversely affect stability, handling or braking and lead to loss of vehicle control, which could result in death or serious injury. (00024d)

WARNING

Harley-Davidson front and rear tires are not the same. Interchanging front and rear tires can cause tire failure, which could result in death or serious injury. (00026a)

WARNING

Do not exceed manufacturer's recommended pressure to seat beads. Exceeding recommended bead seat pressure can cause tire rim assembly to burst, which could result in death or serious injury. (00282a)

For tire pressures, refer to Maintenance → INSPECT TIRES AND WHEELS.

NOTE

- Mount tires with arrows molded into the tire sidewall pointing in the direction of forward rotation.
- If tire has a balance dot on the sidewall, align the balance dot with the valve stem.

Tube-Type Tires

WARNING

Match tires, tubes, rim strips or seals, air valves and caps to the correct wheel. Contact a Harley-Davidson dealer. Mismatching can lead to tire damage, allow tire slippage on the wheel or cause tire failure, which could result in death or serious injury. (00023c)

NOTE

- For correct tire and tube types, see Chassis → SPECIFICATIONS.
- When replacing a tube-type tire, replace the inner tube and rim strip.
- Always use a rim strip on tube-type laced wheels.

1. See Figure 1. **Tube-type laced wheels:**
   a. Verify that no spokes protrude through nipples.
   b. Install a **new** rim strip.
   c. Align the valve stem hole in rim strip with valve stem hole in rim.
   d. Install **new** tube and tire.
2. Balance wheel. See Chassis → TIRES → Balance.
3. Check tire lateral and radial runout. See Chassis → CHECKING AND TRUING WHEELS → Checking Wheel Runout.
4. Install wheel. See Chassis → FRONT WHEEL or Chassis → REAR WHEEL.

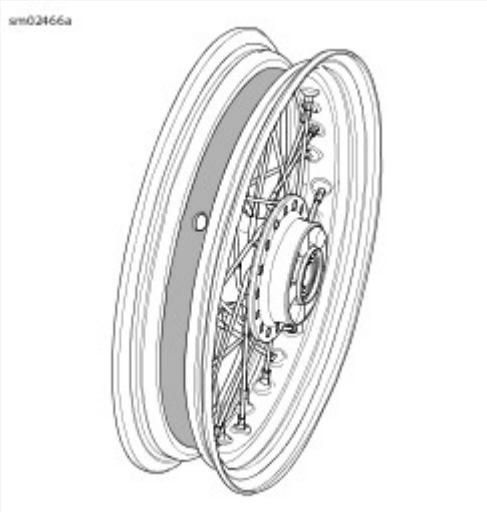

View interactive image

Figure 1. Installed Rim Strip

Tubeless Tires: Cast Wheels

WARNING

Only install original equipment tire valves and valve caps. A valve, or valve and cap combination, that is too long or too heavy can strike adjacent components and damage the valve, causing rapid tire deflation. Rapid tire deflation can cause loss of vehicle control, which could result in death or serious injury. (00281a)

Replace damaged or leaking valve stems.

1. See Figure 2. Metal valve stem.
   a. Install rubber grommet (5) on valve stem.
   b. Insert valve stem into rim hole.
   c. Install metal washer (4) and nut (3). Tighten.
      Torque: 1.4–1.7 N·m (12–15 **in-lbs**) *Valve stem nut*
2. Rubber valve stem.
   a. Cut old valve stem to remove.
   b. Install new valve stem.
   c. Verify that valve stem is securely seated.
3. Install tire.
4. Balance wheel. See Chassis → TIRES → Balance.
5. Check tire lateral and radial runout. See Chassis → CHECKING AND TRUING WHEELS → Checking Wheel Runout.
6. Install wheel. See Chassis → FRONT WHEEL or Chassis → REAR WHEEL.

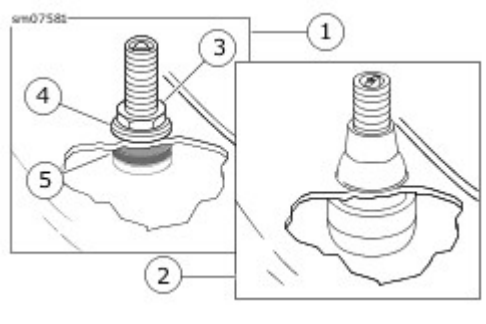

View interactive image

1	Bolt-on valve stem
2	Snap-in valve stem
3	Nut
4	Metal washer
5	Rubber grommet

Figure 2. Tubeless Tire Valve Stems

Lateral Runout

NOTE

- Measure runout with wheel installed on motorcycle or using a wheel stand.
- Avoid measuring on raised letters or vents.

1. Check tire pressure.
2. See Figure 1. Spin the wheel and measure lateral runout from a fixed point to a smooth area on the tire sidewall.
3. If lateral runout exceeds 2.29 mm (0.090 in), remove tire from rim and check rim lateral runout. See Chassis → CHECKING AND TRUING WHEELS.
    a. If rim runout is within specification, replace faulty tire.
    b. If rim runout is not within specification, adjust spokes on laced wheel or replace cast wheel. See Chassis → CHECKING AND TRUING WHEELS.

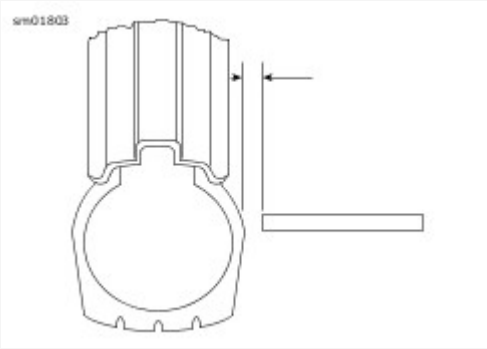

View interactive image

Figure 1. Checking Tire Lateral Runout

Radial Runout

1. Check tire pressure.
2. See Figure 2. Spin the wheel on the axle and measure radial runout at the tread centerline.
3. If tire runout exceeds 2.29 mm (0.090 in), remove tire from rim and check rim radial runout. See Chassis → CHECKING AND TRUING WHEELS.
    a. If rim runout is within specification, replace faulty tire.
    b. If rim runout is not within specification, adjust spokes on laced wheel or replace cast wheel. See Chassis → CHECKING AND TRUING WHEELS.

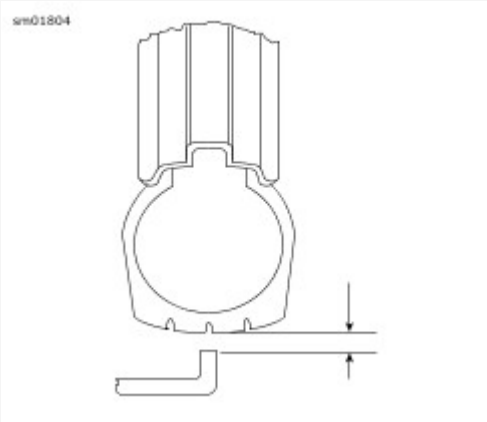

View interactive image

Figure 2. Checking Tire Radial Runout

Static vs Dynamic

Wheel balancing is recommended to improve handling. Balanced wheels reduce vibration especially at high speeds.

Static balancing produces satisfactory results for normal highway speeds. Dynamic balancing can produce better results for deceleration.

Weights

NOTE

- If more than 99.2 g (3.5 oz) of weight is required to balance wheel, rotate the tire 180 degrees on the rim and again balance the assembly. Balance wheels to within 14 g (0.5 oz).
- All wheel weights currently supplied by Harley-Davidson are made from zinc which is lighter than lead. The weight of each zinc segment is 5 g (0.18 oz) as compared to 7 g (0.25 oz) for lead. Weights are stamped for easy identification.
- If adding more than 43 g (1.5 oz) of weight at one location, divide the amount to apply half to each side of rim.
- On cast wheels without a flat area near the bead, place the weights cross-wise through the opening.

1. See Figure 2. Place weights on a smooth surface of the wheel rim such that centrifugal force keeps them in place. Make sure that the area of application is clean, dry and free of oil and grease.

NOTE

See Figure 1. When installing wheel weights, consider cosmetics. Snaking (1) is not to exceed 1.02 mm (0.040 in) (2) of straight. The angle alignment of individual segments is not to exceed three degrees (3).

2. Remove paper backing from the weight. Press firmly in place and hold for ten seconds.

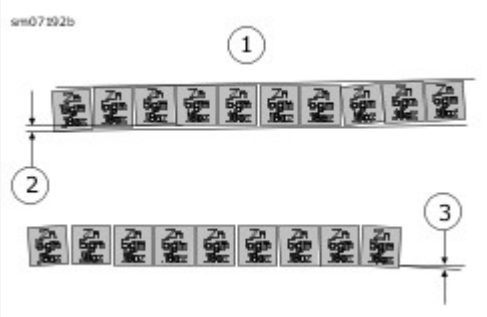

View interactive image

1	Snaking
2	Not to exceed 0.040 in (1.02 mm)
3	Not to exceed 3 degrees

Figure 1. Weight Segment Alignment

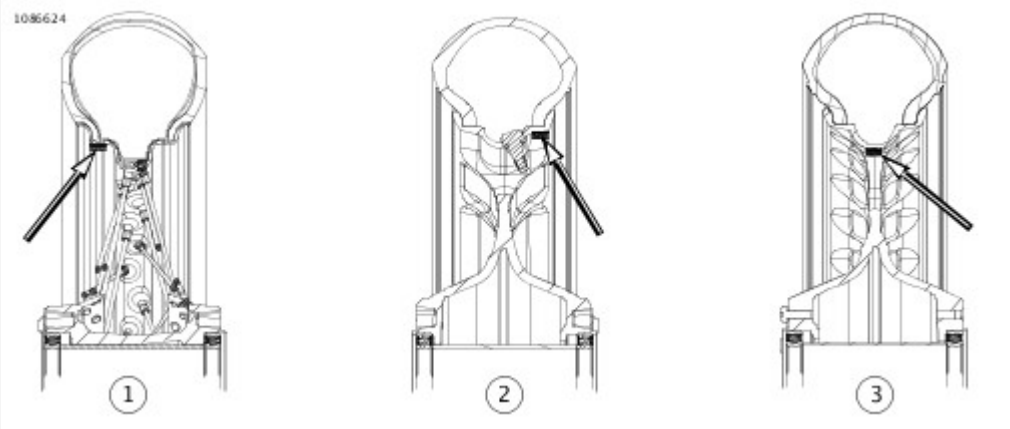

View interactive image

1	Laced steel
2	Cast (typical with flat bead area)
3	Cast (special with no flat bead area)

Figure 2. Wheel Weight Placement

1. Install wheel. See **Chassis → FRONT WHEEL** or **Chassis → REAR WHEEL**.

1. Remove mufflers as necessary. See **Fuel and Exhaust → MUFFLERS**.

Special Tools

Description	Part Number	Qty.
AXLE ALIGNMENT PLUGS	HD-48856-B	1

WARNING

Only a Harley-Davidson dealer should perform vehicle alignment. Improper alignment can adversely affect stability and handling, which could result in death or serious injury. (00060a)

WARNING

Check vehicle alignment according to following procedures. Incorrect alignment can adversely affect stability and handling, which could result in death or serious injury. (00287a)

1. Install rear axle alignment components to rear axle.

   Special Tool: AXLE ALIGNMENT PLUGS (HD-48856-B)

   a. See Figure 2. Insert alignment plug (2) into left end of rear axle. Turn handle until plug is firmly held in axle.
   b. See Figure 3. Install rear axle alignment tool (4) onto right end of rear axle over the e-clip.

Measure: Rear Fork Flat

NOTE

This method should be used prior to disassembly if alignment and belt tension are good.

1. See Figure 1. Fabricate an alignment tool.
   a. Cut a piece of 3.175 mm (0.13 in) diameter aluminum welding rod approximately 153 mm (6 in) long.
   b. Bend rod at a 90 degree angle, 76 mm (3 in) (3) from the flat end.
   c. Place a snug-fitting rubber grommet (2) on rod.
2. **Measure left side:** Measure distance between rear fork flat and rear axle alignment plug center.
   a. See Figure 2. Place end of alignment tool (1) against rear fork flat (4).
   b. Slide rubber grommet (3) along tool shaft until it aligns with hole in center of rear axle alignment plug (2).
   c. Without moving grommet, position alignment tool on other side of rear fork.
   d. Record measurement.
3. **Measure Right side:** Measure distance between rear fork flat and rear axle alignment tool center.
   a. See Figure 3. Place end of alignment tool (1) against rear fork flat (2).

b. If necessary, slide rubber grommet (3) along tool shaft until it aligns with hole in center of rear axle alignment tool (4).

c. Record measurement

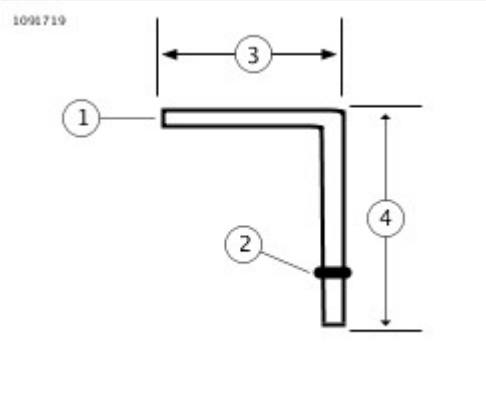

View interactive image

1	Alignment tool
2	Rubber grommet
3	2.25 in (57 mm)
4	3.75 in (95 mm)

Figure 1. Wheel Alignment Tool

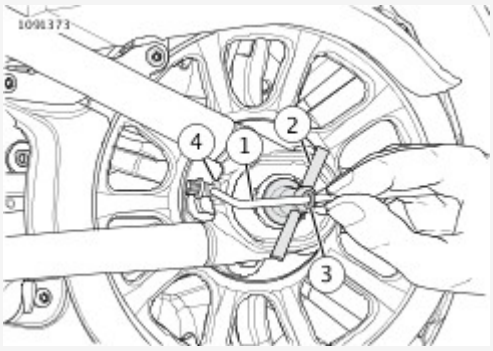

View interactive image

1	Alignment tool
2	Axle alignment plug
3	Rubber grommet
4	Rear fork flat

Figure 2. Rear Axle Alignment: Left Side

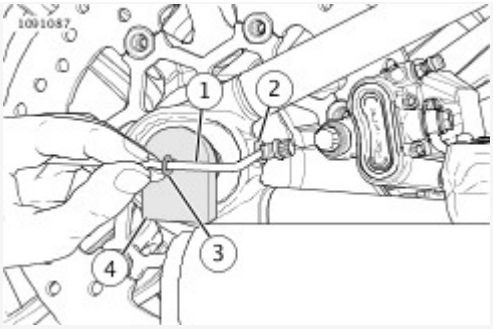

View interactive image

1	Alignment tool
2	Rear fork flat
3	Rubber grommet
4	Rear axle alignment tool

Figure 3. Rear Axle Alignment: Right Side

Measure: Rear Fork Pivot Shaft

NOTE

This method should be used if measurement not taken prior to disassembly.

1. See Figure 4. Place a steel rod through rear fork pivot shaft.
   Diameter: 8 mm (5/16 in)
2. Measure the distance between the center of the steel rod and the axle alignment tools.
   a. Using this method, the left and right side measurements should be equal.
3. Adjust if necessary.

View interactive image

Figure 4. Rear Fork Pivot Shaft Alignment Rod

NOTE

Do not remove E-clip when loosening rear axle nut.

1. Loosen rear axle nut. See **Chassis → REAR WHEEL**.
2. See **Figure 1**. Adjust rear axle.
   a. Turn axle adjuster screw counterclockwise to shorten distance on the side with the longer distance.
   b. **If measured from rear fork flats:** Adjust axle until left and right side alignment measurements match any difference from left or right side previously recorded.
   c. **If measured from rear fork pivot shaft:** Adjust axle until measurements on left and right side are equal.

NOTE

- Keep axle adjuster mechanisms firmly seated (under tension) on each side of rear fork during wheel alignment.
- Do not tighten rear axle nut until after checking drive belt tracking and tension.

3. Verify drive belt deflection. See **Maintenance → INSPECT AND ADJUST DRIVE BELT AND SPROCKETS**.
4. Verify drive belt tracking properly.

WARNING

Do not exceed specified torque when tightening axle nut. Exceeding torque can cause wheel bearings to seize during vehicle operation, which could result in death or serious injury. (00408e)

5. Tighten rear axle nut. See **Maintenance → INSPECT AND ADJUST DRIVE BELT AND SPROCKETS → Adjust Belt**.
6. Verify alignment. See **Chassis → WHEEL ALIGNMENT → Inspect**.

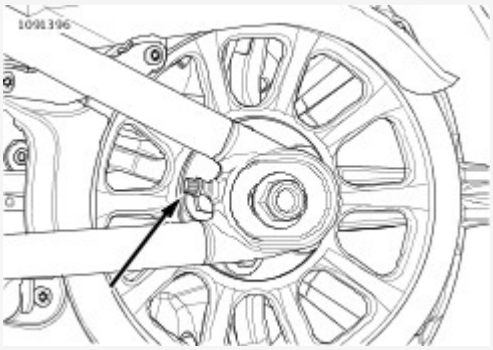

View interactive image

Figure 1. Rear Axle Adjustment Screw

1. If removed, install muffler. See **Fuel and Exhaust → MUFFLERS**.

1. Remove right mirror. See **Chassis → MIRRORS**.
2. Drain brake fluid from front brake system. See **Chassis → BLEED BRAKES**.

NOTICE

DOT 4 brake fluid will damage painted and body panel surfaces it comes in contact with. Always use caution and protect surfaces from spills whenever brake work is performed. Failure to comply can result in cosmetic damage. (00239c)

NOTICE

Do not allow dirt or debris to enter the master cylinder reservoir. Dirt or debris in the reservoir can cause improper operation and equipment damage. (00205c)

NOTICE

Avoid leakage. Be sure gaskets, banjo bolt(s), brake line and master cylinder bore are clean and undamaged before assembly. (00322a)

1. Remove brake line.
   a. Remove banjo bolt and two gasket washers.
   b. Discard gasket washers.
   c. Remove brake line.
2. See Figure 1. Remove screws (17), washers (16), handlebar clamp (15) and master cylinder.
3. Remove master cylinder.

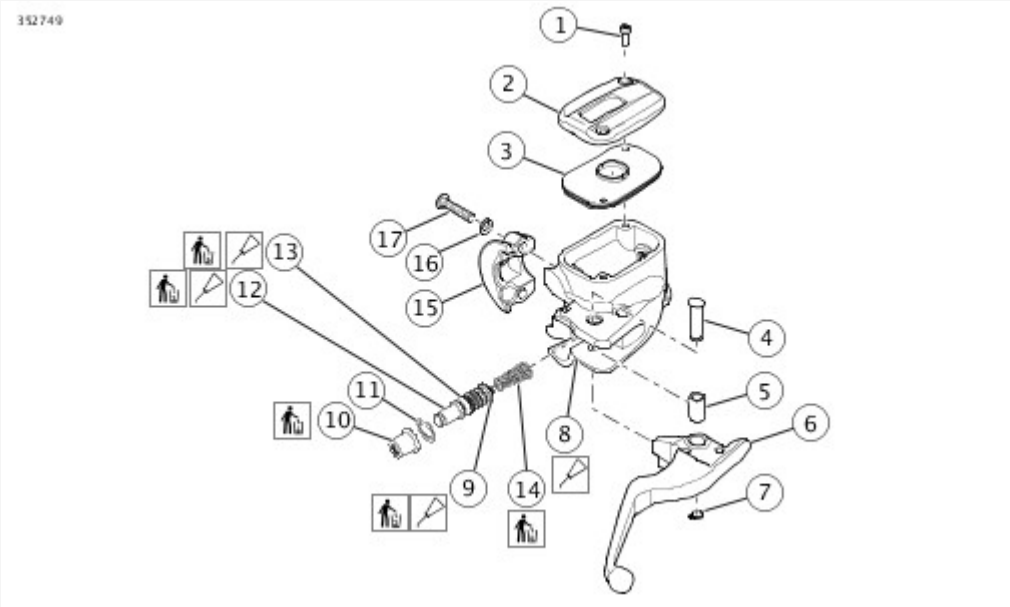

View interactive image

1	Screws (2)
2	Cover
3	Gasket
4	Pivot pin

5	Bushing
6	Brake hand lever
7	Retaining ring
8	Master cylinder reservoir
9	Primary cup
10	Dust boot
11	Retaining ring
12	Piston
13	Secondary cup
14	Spring
15	Handlebar clamp
16	Washer (2)
17	Screw (2)

Figure 1. Front Brake master Cylinder

1. See Figure 1. Position the brake lever/master cylinder assembly inboard of the switch housing assembly, engaging the tab (2) on the lower switch housing (1) in the groove (3) at the top of the brake lever bracket (4).
2. Secure the handlebar clamp to master cylinder with two screws (with flat washers). Position hand lever and controls for rider comfort. Beginning with the top screw, tighten.
   Torque: 6.8–9 N·m (60–80 **in-lbs**) *Handlebar switch clamp screw*

NOTE

See Electrical → RIGHT HAND CONTROL MODULE (RHCM) For proper positioning of hand lever.

NOTICE

Avoid leakage. Be sure gaskets, banjo bolt(s), brake line and caliper bore are clean and undamaged before assembly. (00321a)

3. Attach brake line to master cylinder with banjo bolt and **new** gasket washers. Tighten.
   Torque: 29–31 N·m (21–23 ft-lbs) *Front brake master cylinder banjo bolt - Single disk front brake*
   Torque: 32–34 N·m (24–25 ft-lbs) *Front brake master cylinder banjo bolt - Dual disk front brake*

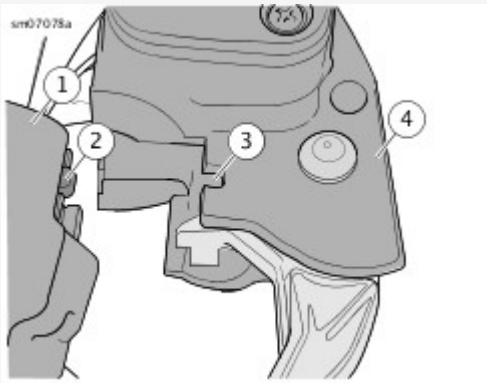

View interactive image

1	Switch housing assembly
2	Tab
3	Groove
4	Brake lever bracket

Figure 1. Attach Master Cylinder to Right Handlebar Switches

1. See **Chassis → FRONT BRAKE MASTER CYLINDER → Remove → Front Brake master Cylinder**. Remove retaining ring (7) from pivot pin groove at bottom of master cylinder bracket.
2. Remove pivot pin (4) and brake hand lever (6).
3. Remove dust boot (10) and discard.
4. Remove retaining ring (11).
5. Remove and discard piston assembly (9, 12-14).
6. Remove screws (1), cover (2) and gasket (3).

Consumables

Description	Part Number	Size
DOT 4 BRAKE FLUID	41800219	355 ml (12 fl oz)

WARNING

Use denatured alcohol to clean brake system components. Do not use mineral-based solvents (such as gasoline or paint thinner), which will deteriorate rubber parts even after assembly. Deterioration of these components can cause brake failure, which could result in death or serious injury. (00291a)

WARNING

Compressed air can pierce the skin and flying debris from compressed air could cause serious eye injury. Wear safety glasses when working with compressed air. Never use your hand to check for air leaks or to determine air flow rates. (00061a)

1. Clean all parts with denatured alcohol or brake fluid.
   DOT 4 BRAKE FLUID (41800219)
   a. Wipe parts dry with a clean, lint-free cloth.
   b. Clear drilled passages and bore with clean compressed air.
2.

   NOTE

   Do not use a wire or similar instrument to clean drilled passages in bottom of reservoir.

   Inspect parts for wear or damage. Replace parts if necessary.
3. Inspect the piston bore in the master cylinder housing for scoring, pitting or corrosion. Replace as necessary.
4. Carefully inspect the outlet port that mates with the brake line fitting. As a critical sealing surface, replace the master cylinder assembly if any damage is noted.
5. Carefully inspect the cover gasket for damage. Replace as necessary.

Consumables

Description	Part Number	Size
CCI #20 BRAKE GREASE	42830-05	29.6 ml (1 fl oz)

1. **NOTE**

   - Always reassemble the master cylinder using new parts from the correct repair kit.
   - Use **CCI #20 BRAKE GREASE (42830-05)** , included in kit, to lubricate cylinder bore, cups and seals before assembly.

   See **Chassis → FRONT BRAKE MASTER CYLINDER → Remove → Front Brake master Cylinder**. Coat piston bore of master cylinder reservoir (8), piston (12), primary cup (9) and secondary cup (13) with grease (supplied in kit).
   CCI #20 BRAKE GREASE (42830-05)
2. Install piston assembly into piston bore of master cylinder reservoir.
   a. Press small end of spring (14) onto piston (12).
   b. Install piston/spring assembly into master cylinder reservoir (8) bore.
3. Press in on piston (12). Install **new** retaining ring (11).
4. Install **new** dust boot (10). Press large end against retaining ring. Small end should fit into groove on shaft.
5. Install gasket (3), cover (2) and screws (1). Leave fasteners loose.
6. Coat front brake lever pin pivot hole and on the end of piston that contacts brake lever with grease (supplied in kit).
   CCI #20 BRAKE GREASE (42830-05)
7. Assemble brake hand lever (6) with pivot pin (4) to master cylinder reservoir (8).

   WARNING

   Wear safety glasses or goggles when removing or installing retaining rings. Retaining rings can slip from the pliers and could be propelled with enough force to cause serious eye injury. (00312a)

8. Install **new** retaining ring (7).

1. Fill and bleed front brake system. See **Chassis → BLEED BRAKES**.
2. Install right mirror. See **Chassis → MIRRORS**.

1. **Caliper service only:** Drain brake fluid from front brake system. See **Chassis → BLEED BRAKES**.

WARNING

Contact with DOT 4 brake fluid can have serious health effects. Failure to wear proper skin and eye protection could result in death or serious injury.

- If inhaled: Keep calm, remove to fresh air, seek medical attention.
- If on skin: Remove contaminated clothing. Rinse skin immediately with plenty of water for 15-20 minutes. If irritation develops, seek medical attention.
- If in eyes: Wash affected eyes for at least 15 minutes under running water with eye lids held open. If irritation develops, seek medical attention.
- If swallowed: Rinse mouth and then drink plenty of water. Do not induce vomiting. Immediate medical attention required.
- See Safety Data Sheet (SDS) for more details available at sds.harley-davidson.com

(00240d)

NOTICE

Avoid leakage. Be sure gaskets, banjo bolt(s), brake line and caliper bore are clean and undamaged before assembly. (00321a)

NOTICE

DOT 4 brake fluid will damage painted and body panel surfaces it comes in contact with. Always use caution and protect surfaces from spills whenever brake work is performed. Failure to comply can result in cosmetic damage. (00239c)

Remove Caliper to Remove Front Wheel

1. See Figure 1. Remove mounting bolts (2). Slide caliper rearward, and position out-of-way.

Remove Caliper to Remove Front Brake Pads

1. See Figure 1. Loosen brake pad hanger pins (6).
2. Remove mounting bolts (2). Slide caliper rearward, and position out-of-way.

Remove Caliper for Service

1. See Figure 1. Loosen brake pad hanger pins (6).
2. Remove banjo bolt (4).
   a. Remove banjo bolt.
   b. Remove and discard gasket washers (5).
3. Loosen bridge bolts (7).
4. Remove mounting bolts (2). Slide caliper rearward, and remove front brake caliper.

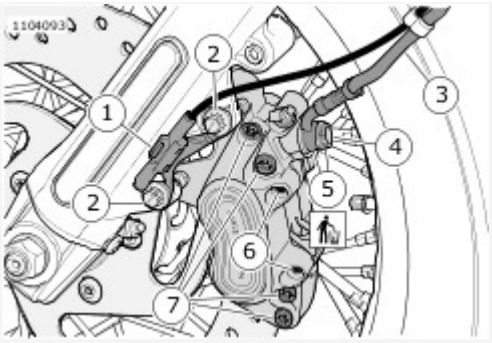

View interactive image

1	WSS (Wheel speed sensor) harness retainer - ABS (Anti-lock braking system) only
2	Caliper mounting bolt (2)
3	Front brake line
4	Banjo bolt
5	Gasket washer (2)
6	Brake pad hanger pin (2)
7	Bridge bolt (4)

Figure 1. Front Brake Caliper: (Typical)

Consumables

Description	Part Number	Size
DOT 4 BRAKE FLUID	41800219	355 ml (12 fl oz)

Install Caliper After Service

1. **NOTE**

   ABS Models: Install WSS (Wheel speed sensor) harness retainer (1) when installing caliper to front fork.

   See Chassis → FRONT BRAKE CALIPER → Remove → Front Brake Caliper: (Typical). Install caliper.

   a. Slide caliper forward, guiding the brake pads around brake rotor.

   b. Align the caliper with the mounting bolt holes.

2. Install mounting bolts (2). Tighten.
   Torque: 38–51.5 N·m (28–38 ft-lbs) *Front brake caliper mounting bolts*

3. Install banjo bolt (4).

   a. Lubricate new gasket washers (3) with brake fluid. DOT 4 BRAKE FLUID (41800219)

   b. **NOTICE**

      Avoid leakage. Be sure gaskets, banjo bolt(s), brake line and master cylinder bore are clean and undamaged before assembly. (00322a)

      Install banjo bolt, **new** gasket washers (1) and front brake line (3). Tighten.
      Torque: 19–24.4 N·m (14–18 ft-lbs) *Front brake caliper banjo bolt*

4. Tighten bridge bolts (7).
   Torque: 19.6–24.5 N·m (14–18 ft-lbs) *Front brake caliper bridge bolt*

5. Tighten brake pad hanger pin (6).
   Torque: 14.7–19.6 N·m (11–14 ft-lbs) *Front brake caliper pad hanger pin*

Install Caliper After Installing Front Brake Pads

1. **NOTE**

   ABS Models: Install WSS harness retainer (1) when

installing caliper to front fork.

See Chassis → FRONT BRAKE CALIPER → Remove → Front Brake Caliper: (Typical). Install caliper.

a. Slide caliper forward, guiding the brake pads around brake rotor.
b. Align the caliper with the mounting bolt holes.

2. Install mounting bolts (2). Tighten.
Torque: 38–51.5 N·m (28–38 ft-lbs) *Front brake caliper mounting bolts*
3. Tighten brake pad hanger pin (6).
Torque: 14.7–19.6 N·m (11–14 ft-lbs) *Front brake caliper pad hanger pin*

Install Caliper After Installing Front Wheel

1.

NOTE

ABS Models: Install WSS harness retainer (1) when installing caliper to front fork.

See Chassis → FRONT BRAKE CALIPER → Remove → Front Brake Caliper: (Typical). Install caliper.

a. Slide caliper forward, guiding the brake pads around brake rotor.
b. Align the caliper with the mounting bolt holes.

2. Install mounting bolts (2). Tighten.
Torque: 38–51.5 N·m (28–38 ft-lbs) *Front brake caliper mounting bolts*
3. **ABS models:** Verify WSS wire harness clips are in place.

NOTE

Avoid making hard stops for the first 160 km (100 mi). This allows the **new** pads to become conditioned to the brake discs.

1. Remove one brake pad. See **Maintenance → INSPECT BRAKES**.
2. Verify that remaining brake pad is installed with brake pad pins.
3. Verify that bleeder screw is installed.

NOTE

Do not damage banjo bolt sealing surface or threads of banjo bolt hole in brake caliper. Use an air nozzle with a rubber tip.

WARNING

Compressed air can pierce the skin and flying debris from compressed air could cause serious eye injury. Wear safety glasses when working with compressed air. Never use your hand to check for air leaks or to determine air flow rates. (00061a)

CAUTION

When removing piston with compressed air, piston can develop considerable force and fly out of caliper bore. Keep hands away from piston to avoid possible injury. (00530b)

4. Gently apply low pressure compressed air to banjo bolt hole to force pistons from caliper bores.
5. Remove brake pad pins and brake pad.
6. See **Figure 1**. Remove bridge bolts (11, 12) and separate caliper housings.
7. Remove pistons from each housing by hand. If necessary, wiggle pistons gently to remove.

NOTE

Damaged piston bores leak when reassembled. Do not use metal objects to remove or install objects from piston bores. Prevent damage to pistons, seals and bores by only using a wooden toothpick when servicing calipers.

8. Using a wooden toothpick, remove dust seals (5, 9) and piston seals (4, 10) from each caliper bore. Discard seals.
9. If necessary, remove bleeder screw (1).

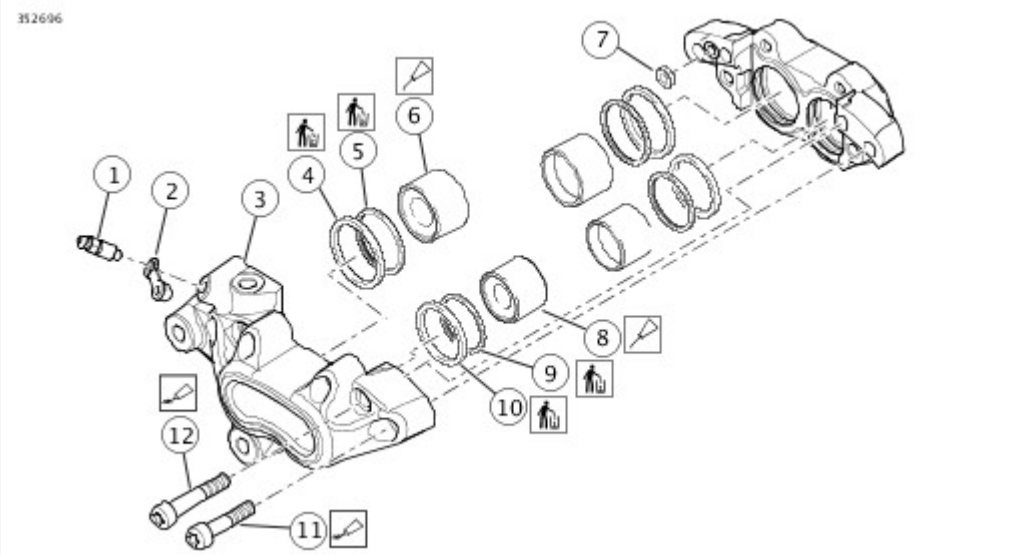

View interactive image

1	Bleeder screw
2	Bleeder screw cap
3	Outer caliper housing
4	34 mm seal (2)
5	34 mm dust seal (2)
6	34 mm piston (2)
7	Cross-over seal
8	32 mm piston (2)
9	32 mm dust seal (2)
10	32 mm seal (2)
11	Short bridge bolt (2)
12	Long bridge bolt (2)

Figure 1. Front Caliper

Consumables

Description	Part Number	Size
DOT 4 BRAKE FLUID	41800219	355 ml (12 fl oz)

WARNING

Use denatured alcohol to clean brake system components. Do not use mineral-based solvents (such as gasoline or paint thinner), which will deteriorate rubber parts even after assembly. Deterioration of these components can cause brake failure, which could result in death or serious injury. (00291a)

1. Clean all rubber parts with brake fluid. Do not contaminate with mineral oil or other solvents. Clean all metal parts with denatured alcohol. Wipe parts dry with a clean, lint-free cloth. DOT 4 BRAKE FLUID (41800219)

WARNING

Compressed air can pierce the skin and flying debris from compressed air could cause serious eye injury. Wear safety glasses when working with compressed air. Never use your hand to check for air leaks or to determine air flow rates. (00061a)

2. Blow out drilled passages and piston bore with low pressure compressed air from a clean air supply. Do not use a wire or similar instrument to clean drilled passages.
3. Carefully inspect all components. Replace as necessary.
   a. Check pistons for pitting, scratches or corrosion on outside surfaces.
   b. Inspect piston bores. Do not hone bores. Replace as necessary.

NOTE

The pad pins are manufactured with a relief near the center of their length, where the pad spring touches. Do not use this area as a measurement point to determine pad pin wear.

   c. Inspect pad pin for grooving and wear at the pad contact points. Measure the pad pin diameter in an unworn area and in an area of any grooving or wear. If wear exceeds 0.28 mm (0.011 in), replace pad pin.
   d. Inspect pad spring for wear or cracks. Replace if necessary.
   e. Always replace all seals after disassembly.

WARNING

> Always replace brake pads in complete sets for correct and safe brake operation. Improper brake operation could result in death or serious injury. (00111a)

4. Inspect brake pads and brake disc. Replace if necessary.
   a. **Specifications: content:** See **Maintenance → INSPECT BRAKES**.
   b. **Brake Disc:** See **Chassis → FRONT WHEEL**.

Consumables

Description	Part Number	Size
G40M BRAKE GREASE	42820-04	29.6 ml (1 fl oz)
LOCTITE 569 BROWN THREAD SEALANT	Loctite 569	50 ml

1. Lubricate the following parts using a light coat of grease. All other surfaces must be dry.
   G40M BRAKE GREASE (42820-04)
   a. Nose radius of pistons.

   > **NOTE**
   >
   > - Damaged piston bores leak when reassembled. Do not use metal objects to remove or install objects in piston bores. Prevent damage to bores by only using a wooden toothpick when servicing calipers.
   > - Pistons and bores differ slightly in diameter: one large and one small in each housing.

   b. All surfaces of piston seals and dust seals.
2. See **Chassis → FRONT BRAKE CALIPER → Disassemble → Front Caliper**. Install a **new** piston seal (4, 10) and a **new** dust seal (5, 9) into each piston bore.
3. Carefully insert pistons (6, 8) by hand, nose radius first, into caliper bores. If installation shows resistance, remove pistons. Check that seals are properly installed and fully seated in grooves. Press pistons completely into bores.
4. Install **new** cross-over seal (7).
5. Install bridge bolts (11, 12).
   a. Apply a drop of threadlocker to the threads of the bridge bolts.
   LOCTITE 569 BROWN THREAD SEALANT (Loctite 569)
   b. Assemble caliper housings.
   c. Install bridge bolts. Tighten.
   Torque: 19.6–24.5 N·m (14–18 ft-lbs) *Brake caliper, front, bridge bolt*
6. Install bleeder screw on caliper housing if removed. Tighten.
   Torque: 3.9–6.9 N·m (35–61 **in-lbs**) *Front brake caliper bleeder screw*

1. **If drained:** Fill and bleed front brake system. See **Chassis → BLEED BRAKES**.

1. Drain brake fluid from rear brake system. See **Chassis → BLEED BRAKES**.
2. **If needed:** Remove right footboard/footpeg bracket. See **Chassis → RIGHT FOOT CONTROLS**.

1. See Figure 1. Remove cotter circle (1).
2. Remove clevis pin.

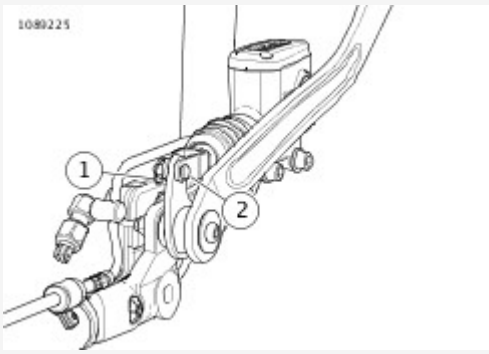

View interactive image

1	Cotter circle
2	Clevis pin

Figure 1. Rear Master Cylinder - Rear View: (exhaust remove for clarity)

3. See Figure 2. Remove banjo bolt (2) and two gasket washers (1) to disconnect fitting of hydraulic brake line from master cylinder. Discard washers.
4. Remove screws (4).

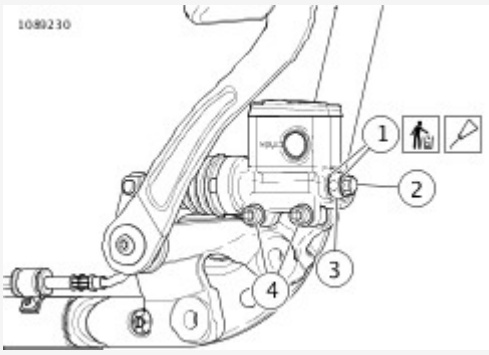

View interactive image

1	Gasket washer (2)
2	Banjo bolt
3	Brake line
4	Screw (2)

Figure 2. Rear Master Cylinder - Front View: (exhaust remove for clarity)

5. Remove rear master cylinder bracket.
    a. See **Figure 3**. Remove screw (3).
    b. Remove rear master cylinder bracket.

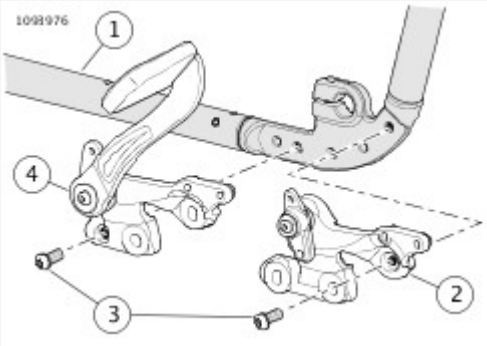

View interactive image

1	Partial lower frame rail
2	Rear master cylinder bracket - Mid controls
3	Screw
4	Rear master cylinder bracket - Forward controls

Figure 3. Rear Master Cylinder Bracket

1.

NOTE

Verify that the brake pedal link is between the master cylinder yoke when placing the master cylinder into place.

Install rear master cylinder onto rear master cylinder bracket. Hand tighten.

2. See **Chassis → REAR BRAKE MASTER CYLINDER → Remove → Rear Master Cylinder - Rear View: (exhaust remove for clarity)**. Install clevis pin.
3. Install cotter circle.
4. Position rear master assembly into place on frame.
5. See **Chassis → REAR BRAKE MASTER CYLINDER → Remove → Rear Master Cylinder Bracket**. Install screw. Tighten.
   Torque: 40.7–54.2 N·m (30–40 ft-lbs) *Master cylinder bracket to frame screw*
6. See **Chassis → REAR BRAKE MASTER CYLINDER → Remove → Rear Master Cylinder - Front View: (exhaust remove for clarity)**. Install screws (4). Tighten.
   Torque: 24.4–29.9 N·m (18–22 ft-lbs) *Brake master cylinder, rear, mounting screws*

NOTICE

Avoid leakage. Be sure gaskets, banjo bolt(s), brake line and caliper bore are clean and undamaged before assembly. (00321a)

7. Attach brake line (3) to master cylinder with banjo bolt (2) and **new** gasket washers (1). Tighten.
   Torque: 19–24.4 N·m (14–18 ft-lbs) *Master cylinder, rear, banjo bolt*

Consumables

Description	Part Number	Size
CCI #20 BRAKE GREASE	42830-05	29.6 ml (1 fl oz)
G40M BRAKE GREASE	42820-04	29.6 ml (1 fl oz)

Disassemble

1. **NOTE**

   Install a **new** rebuild kit when unit is reassembled.

   See Figure 1. Remove cover.
   a. Remove cover screws (3).
   b. Remove cover (5).
   c. Remove reservoir gasket (2).
2. Remove piston set (1).
   a. Hold nut (18). Remove yoke (20).
   b. Remove return spring boot (19).
   c. **WARNING**

      Wear safety glasses or goggles when removing or installing retaining rings. Retaining rings can slip from the pliers and could be propelled with enough force to cause serious eye injury. (00312a)

      Remove nut (18), spring retainer (17) and return spring (16).
   d. Remove boot (15).
   e. Remove retaining ring (14) and pushrod assembly (13, 12 and 11).
   f. Remove piston assembly (9 and 10).
   g. Remove spring (7) and primary cup (8).
3. Discard piston set.

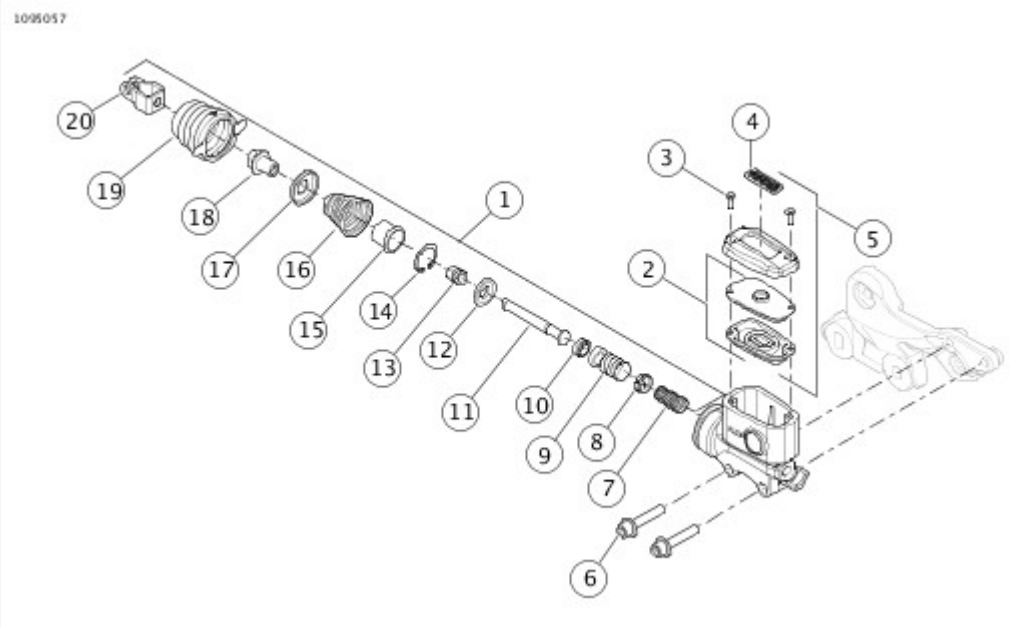

View interactive image

1	Piston set
2	Reservoir gasket
3	Cover screw (2)
4	Decal
5	Cover
6	Screw (2)
7	Spring
8	Primary cup
9	Piston
10	Secondary cup
11	Push rod
12	Stop plate
13	Boot collar
14	Retaining ring
15	Boot
16	External return spring
17	Spring retainer
18	Nut

19	Return spring boot
20	Yoke

Figure 1. Rear Master Cylinder Assembly

Clean and Inspect

WARNING

Use denatured alcohol to clean brake system components. Do not use mineral-based solvents (such as gasoline or paint thinner), which will deteriorate rubber parts even after assembly. Deterioration of these components can cause brake failure, which could result in death or serious injury. (00291a)

1. **NOTE**

   Do not use wire or similar tool to clean drilled passages.

   Clean all metal parts, except the cartridge body assembly, and blow dry with compressed air. Clean all rubber parts using denatured alcohol.
2. Inspect the cylinder bore for scratches. Replace the master cylinder assembly if scratches are present.
3. Inspect O-ring grooves on the cartridge body for dirt. Carefully clean O-ring grooves using a soft cotton cloth moistened with alcohol and allow to dry. Inspect O-ring grooves for scratches. Replace cartridge body if grooves are scratched.
4. Inspect the reservoir cover gasket for cuts, tears or general deterioration.

Assemble

1. **NOTE**

   When assembling rear brake master cylinder, always use **new** parts from the service parts kit.

   See Figure 1. Install **new** piston set (1).

   a. Apply grease to cylinder bore, piston (9) and cups (8 and 10).
      CCI #20 BRAKE GREASE (42830-05)
   b. Install primary cup (8) on small end of spring (7).
   c. Insert large end of spring first. Install spring and cup into cylinder bore.
   d. Insert flat end of piston first. Install piston and cup into cylinder bore.
   e. Lightly apply grease to ball end of the pushrod assembly.

G40M BRAKE GREASE (42820-04)

f. Install ball end of pushrod into cupped end of piston.

g. Compress piston with pushrod.

h.

> **WARNING**
>
> Wear safety glasses or goggles when removing or installing retaining rings. Retaining rings can slip from the pliers and could be propelled with enough force to cause serious eye injury. (00312a)

Install retaining ring (14). Verify that retaining ring is completely seated in groove.

i. Install boot (15) over pushrod and into end of master cylinder bore. Press lip of inner boot down around groove in boot collar (13).

j. Install external return spring (16).

k. Compress return spring and Install spring retainer (17) and nut (18).

l. See **Figure 2**. Tighten nut to 48.8 mm (1.9 in) from face of master cylinder to end of hex nut.

m. See **Figure 1**. Install return spring boot (19). Position boot taps at 3 o'clock and 9 o'clock position when master cylinder body is held upright.

n. Hold nut and install yoke (20). Tighten.
Torque: 14.7–19.6 N·m (11–14 ft-lbs) *Master brake cylinder yoke*

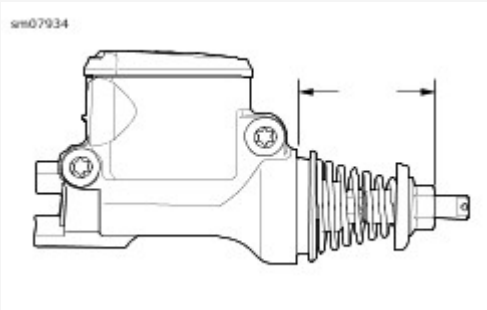

View interactive image

Figure 2. 1.92 in (48.8 mm)

1. **If removed:** Install right footboard/footpeg bracket. See **Chassis → RIGHT FOOT CONTROLS**.
2. Fill and bleed rear brake system. See **Chassis → BLEED BRAKES**.

1. **If necessary:** Remove muffler. See **Fuel and Exhaust → EXHAUST SYSTEM**.
2. **Caliper service only:** Drain brake fluid from rear brake system. See **Chassis → BLEED BRAKES**.

WARNING

Contact with DOT 4 brake fluid can have serious health effects. Failure to wear proper skin and eye protection could result in death or serious injury.

- If inhaled: Keep calm, remove to fresh air, seek medical attention.
- If on skin: Remove contaminated clothing. Rinse skin immediately with plenty of water for 15-20 minutes. If irritation develops, seek medical attention.
- If in eyes: Wash affected eyes for at least 15 minutes under running water with eye lids held open. If irritation develops, seek medical attention.
- If swallowed: Rinse mouth and then drink plenty of water. Do not induce vomiting. Immediate medical attention required.
- See Safety Data Sheet (SDS) for more details available at sds.harley-davidson.com

(00240d)

NOTICE

DOT 4 brake fluid will damage painted and body panel surfaces it comes in contact with. Always use caution and protect surfaces from spills whenever brake work is performed. Failure to comply can result in cosmetic damage. (00239c)

NOTE

If DOT 4 brake fluid contacts painted surfaces, IMMEDIATELY flush area with clear water.

1. See Figure 1. Remove slider bolt (5) and sleeve screw (6).
   a. Clean threads of sleeve screw.

Removing Caliper to Remove Rear Wheel

1. Remove caliper.
   a. Slide caliper forward to clear rear brake rotor, and position out-of-way.

Removing Caliper to Removing Rear Brake Pads

1. Loosen the brake pad hanger pins (7).
2. Remove caliper.
   a. Slide caliper forward to clear rear brake rotor, and position to remove rear brake pads.

Removing Caliper for Service

1. Loosen the brake pad hanger pins (7).
2. Remove banjo bolt (2).
   a. Remove banjo bolt.
   b. Remove and discard gasket washers (1).

3. Remove caliper.
   a. Slide caliper forward to clear rear brake rotor, and remove rear brake caliper.

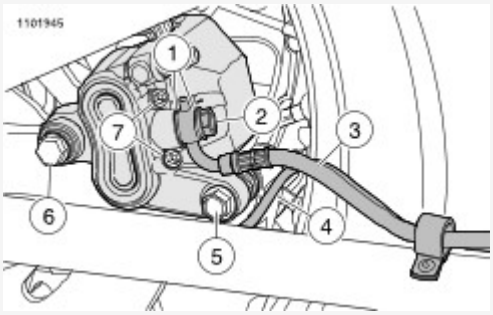

View interactive image

1	Gasket washer (2)
2	Banjo bolt
3	Rear brake line
4	WSS (Wheel speed sensor) harness - ABS (Anti-lock braking system) only
5	Slider bolt
6	Sleeve screw
7	Brake pad hanger pin (2)

Figure 1. Rear Caliper

Remove Rear Caliper Mounting Bracket

1. Remove rear wheel. See Chassis → REAR WHEEL.
2. Remove rear caliper mounting bracket.
   a. Inspect for damage or worn parts.

Special Tools

Description	Part Number	Qty.
12MM TORQUE ADAPTER	HD-52351	1

Consumables

Description	Part Number	Size
LOCTITE 242 MEDIUM STRENGTH THREADLOCKER ADHESIVE (BLUE)	Loctite 242	10 ml

Install Rear Caliper Mounting Bracket

1. Position rear caliper mounting bracket on rear wheel.
2. Install rear wheel. See **Chassis → REAR WHEEL**.

Installing Caliper from Service

1. See **Chassis → REAR BRAKE CALIPER → Remove → Rear Caliper**. Install caliper
   a. Position caliper on mounting bracket in front of brake rotor.
   b. Slide caliper rearward, guiding the brake pads around brake rotor.

   NOTE

   Verify the **WSS** (Wheel speed sensor) harness (4) is routed under the caliper mounting bracket.

   c. Align the caliper with the slider bolt hole and sleeve screw hole.
   d. Apply threadlocker to sleeve screw. Install slider bolt (5) and sleeve screw (6). Hand tighten.
   LOCTITE 242 MEDIUM STRENGTH THREADLOCKER ADHESIVE (BLUE) (Loctite 242)
2. Install banjo bolt (2).
   a. Install banjo bolt, **new** gasket washers (1) and rear brake line (3). Tighten.
   Torque: 29–31 N·m (21–23 ft-lbs) *Rear brake caliper banjo bolt*
3. Tighten brake pad hanger pins (7).
   Torque: 14.7–19.6 N·m (11–14 ft-lbs) *Rear brake caliper pad hanger pin*

Installing Caliper from Removing Rear Brake Pads

1. See Chassis → REAR BRAKE CALIPER → Remove → Rear Caliper. Install caliper
   a. Position caliper on mounting bracket in front of brake rotor.
   b. Slide caliper rearward, guiding the brake pads around brake rotor.

      NOTE

      Verify the WSS harness (4) is routed under the caliper mounting bracket.

   c. Align the caliper with the slider bolt hole and sleeve screw hole.
   d. Install slider bolt (5) and sleeve screw (6). Hand tighten.
2. Tighten brake pad hanger pins (7).
   Torque: 14.7–19.6 N·m (11–14 ft-lbs) *Rear brake caliper pad hanger pin*

Installing Caliper from Remove Rear Wheel

1. See Chassis → REAR BRAKE CALIPER → Remove → Rear Caliper. Install caliper
   a. Position caliper on mounting bracket in front of brake rotor.
   b. Slide caliper rearward, guiding the brake pads around brake rotor.

      NOTE

      Verify the WSS harness (4) is routed under the caliper mounting bracket.

   c. Align the caliper with the slider bolt hole and sleeve screw hole.
   d. Install slider bolt (5) and sleeve screw (6). Hand tighten.

Install All

1. See Figure 1. Using torque adapter.

   Special Tool: 12MM TORQUE ADAPTER (HD-52351)

   a. Tighten sleeve screw (4).
      Torque: 19.6–24.5 N·m (14–18 ft-lbs) *Rear caliper sleeve screw*
   b. Tighten slider bolt (3).
      Torque: 19.6–24.5 N·m (14–18 ft-lbs) *Rear caliper slider bolt*

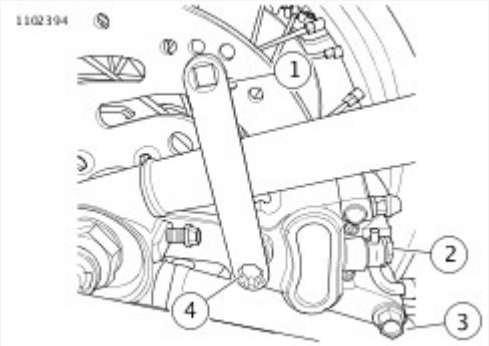

View interactive image

1	12mm Torque Adapter (HD-52351)
2	Banjo bolt
3	Slider bolt
4	Sleeve screw

Figure 1. 12mm Torque Adapter (HD-52351)

Special Tools

Description	Part Number	Qty.
REAR BRAKE PISTION REMOVAL TOOL	HD-48648	1

Caliper

1. Remove rear brake pads. See Maintenance → INSPECT BRAKES.

> **WARNING**
>
> Compressed air can pierce the skin and flying debris from compressed air could cause serious eye injury. Wear safety glasses when working with compressed air. Never use your hand to check for air leaks or to determine air flow rates. (00061a)

2. See Figure 2. Removal pistons (1).
   a. Place caliper on working bench.
   b. Remove brake pad retaining spring (10).
   c. See Figure 1. Using low pressure compressed air and removal tool, remove pistons and discard.

      Special Tool: REAR BRAKE PISTION REMOVAL TOOL (HD-48648)

View interactive image

1	HD-48648 Rear brake piston removal tool
2	Rear brake caliper

Figure 1. Caliper Piston Removal

3. See Figure 2. Remove seals and discard.

a. Remove dust seal (2).

b. Remove piston seal (3).

4. Remove brake caliper sleeve (8).
5. Remove brake caliper sleeve boot (9).
6. Remove bleeder screw cap (5).
7. Remove bleeder screw (4).
8. Remove medallion (7).

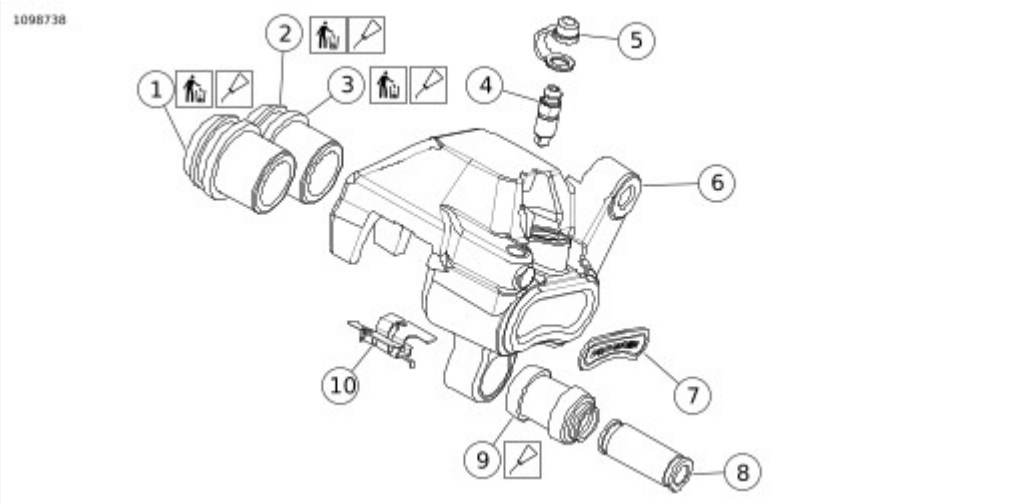

View interactive image

1	Piston (2)
2	Dust seal (2)
3	Piston seal (2)
4	Bleeder screw
5	Bleeder screw cap
6	Brake caliper body
7	Medallion
8	Brake caliper sleeve
9	Brake caliper sleeve boot
10	Brake pad retaining spring

Figure 2. Rear Brake Caliper Assembly

Rear Caliper Mounting Bracket

1. See Figure 3. Remove slider pin (5).
2. Remove slider pin dust cover (4).
3. Remove caliper damper (3).

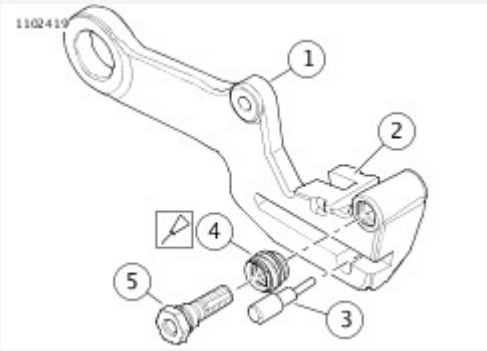

View interactive image

1	Mounting bracket
2	Brake pad retaining clip seat
3	Caliper damper
4	Slider pin dust cover
5	Slider pin

Figure 3. Rear Caliper Mounting Bracket

Consumables

Description	Part Number	Size
DOT 4 BRAKE FLUID	41800219	355 ml (12 fl oz)

WARNING

Use denatured alcohol to clean brake system components. Do not use mineral-based solvents (such as gasoline or paint thinner), which will deteriorate rubber parts even after assembly. Deterioration of these components can cause brake failure, which could result in death or serious injury. (00291a)

1. Clean all rubber parts with brake fluid. Do not contaminate with mineral oil or other solvents. Clean all metal parts with denatured alcohol. Wipe parts dry with a clean, lint-free cloth. DOT 4 BRAKE FLUID (41800219)

WARNING

Compressed air can pierce the skin and flying debris from compressed air could cause serious eye injury. Wear safety glasses when working with compressed air. Never use your hand to check for air leaks or to determine air flow rates. (00061a)

2. Blow out drilled passages and piston bore with low pressure compressed air from a clean air supply. Do not use a wire or similar instrument to clean drilled passages.
3. Carefully inspect all components. Replace as necessary.
   a. Check pistons for pitting, scratches or corrosion on outside surfaces.
   b. Inspect piston bores. Do not hone bores. Replace as necessary.

NOTE

The pad pins are manufactured with a relief near the center of their length, where the pad spring touches. Do not use this area as a measurement point to determine pad pin wear.

   c. Inspect pad pin for grooving and wear at the pad contact points. Measure the pad pin diameter in an unworn area and in an area of any grooving or wear. If wear exceeds 0.28 mm (0.011 in), replace pad pin.
   d. Inspect pad spring for wear or cracks. Replace if necessary.
   e. Always replace all seals after disassembly.

WARNING

> Always replace brake pads in complete sets for correct and safe brake operation. Improper brake operation could result in death or serious injury. (00111a)

4. Inspect brake pads and brake disc. Replace if necessary.
   a. **Specifications: content:** See **Maintenance → INSPECT BRAKES**.
   b. **Brake Disc:** See **Chassis → REAR WHEEL**.

Consumables

Description	Part Number	Size
CCI #20 BRAKE GREASE	42830-05	29.6 ml (1 fl oz)
DOT 4 BRAKE FLUID	41800219	355 ml (12 fl oz)
G40M BRAKE GREASE	42820-04	29.6 ml (1 fl oz)

Rear Caliper Mounting Bracket

1. See Chassis → REAR BRAKE CALIPER → Disassemble → Rear Caliper Mounting Bracket. Install caliper damper (3).
2. Apply grease to the inside of slider pin dust cover (4).
   G40M BRAKE GREASE (42820-04)
3. Install slider pin dust cover.
4. Install slider pin (5).

Caliper

1. See Chassis → REAR BRAKE CALIPER → Disassemble → Rear Brake Caliper Assembly. Install **new** medallion (7). See Chassis → MEDALLIONS, BADGES, TANK EMBLEMS AND ADHESIVE STRIPS.
2. Install bleeder screw (4). Hand tighten.
3. Install bleeder screw cap (5).
4. Lightly apply silicone grease to brake caliper sleeve boot (9).
   CCI #20 BRAKE GREASE (42830-05)
5. Install brake caliper sleeve (8).

NOTICE

Avoid leakage. Prevent damage to piston or piston bore. Use non-metallic tools when servicing components. (00529d)

6. Install piston (1).
   a. Apply a light coating of brake fluid over the pistons, dust seal (2) and piston seal (3).
      DOT 4 BRAKE FLUID (41800219)
   b. See Figure 1. Install the piston seals (3) into the brake caliper piston bore.
   c. Install the dust seals (2) into the brake caliper piston bore.
   d. Insert pistons, by hand, into bores of caliper housing. Press pistons squarely into place until they bottom in the bores. If installation shows resistance, remove piston. Check that seals are properly installed.

e. Install brake pad retaining spring (10).

View interactive image

1	Wooden toothpick
2	Dust seal
3	Piston seal

Figure 1. Rear Caliper Seals (Typical)

1. **If drained:** Fill and bleed rear brake system. See **Chassis → BLEED BRAKES**.
2. **If removed:** Install muffler. See **Fuel and Exhaust → EXHAUST SYSTEM**.

Prepare

1. Drain front brake line. See **Chassis → BLEED BRAKES**.

Remove

1. Remove brake line (1) from front brake master cylinder. See **Chassis → FRONT BRAKE MASTER CYLINDER**.

NOTE

If equipped with dual front calipers, remove brake lines from both calipers.

2. Remove brake line from front brake caliper. See **Chassis → FRONT BRAKE CALIPER**.
3. See **Figure 1**. Remove brake line.
   a. Remove brake line from wireform (2).
   b. Remove cable strap, if equipped.
   c. Remove screw (4).
   d. Remove brake line.
   e. **Single caliper:** Remove clamp (3) from front brake line.

Install

1. Install brake line (1) to front brake master cylinder. See **Chassis → FRONT BRAKE MASTER CYLINDER**.
2. See **Figure 1**. Install brake line.
   a. Route brake line as shown.
   b. **Single caliper:** Install clamp (3) onto front brake line.
   c. **Dual caliper:** Position front brake line manifold (5)
   d. Install screw (4). Tighten.
      Torque: 4.1–5.4 N·m (36–48 **in-lbs**) *Front brake line screw*
3. Install brake line to front brake caliper. See **Chassis → FRONT BRAKE CALIPER**.

   NOTE

   If equipped with dual front calipers, install brake lines to both calipers.

4. Install brake line into wireform (2).
5. Install cable strap, if removed.

Complete

1. Bleed brake system. See **Chassis → BLEED BRAKES**.

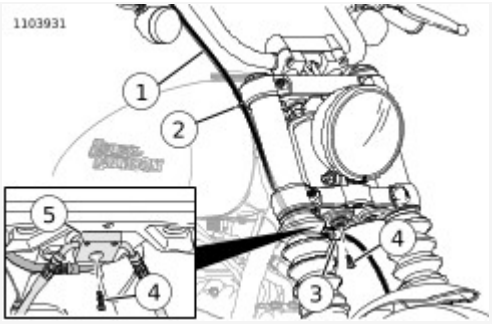

View interactive image

1	Brake line
2	Wire form
3	Clamp
4	Screw
5	Front brake line manifold

Figure 1. Front Brake Line: Single and Dual Front Caliper (Non ABS)

Consumables

Description	Part Number	Size
LOCTITE 243 MEDIUM STRENGTH THREADLOCKER AND SEALANT (BLUE)	99642-97	6 ml (¼ fl oz)

Prepare

1. Remove seat. See Chassis → SEAT.
2. Remove right side cover. See Chassis → RIGHT SIDE COVER.
3. Remove negative battery cable. See Electrical → POWER DISCONNECT.
4. Remove battery strap. See Maintenance → INSPECT BATTERY.
5. Remove battery. See Maintenance → INSPECT BATTERY.
6. Remove battery tray. See Electrical → BATTERY TRAY.
7. Drain rear brake line. See Chassis → BLEED BRAKES.
8. Remove rear stoplamp switch. See Electrical → REAR STOPLAMP SWITCH.

Remove

1. Remove brake line from rear brake master cylinder. See Chassis → REAR BRAKE MASTER CYLINDER.
2. Remove brake line from rear brake caliper. See Chassis → REAR BRAKE CALIPER.
3. See Figure 1. Remove rear brake line retaining bracket.
   a. Remove screws (1).
   b. Remove rear brake line bracket (2).
4. Remove brake line.
   a. Remove screws (5).
   b. Remove brake line (4).
   c. Remove clamps (6) from brake line.
   d. Remove grommet (3) from brake line.

Install

1. See Figure 1. Install grommet (3) onto brake line (4).
2. Route brake line as shown.
3. Install brake line at rear brake master cylinder. See Chassis → REAR BRAKE MASTER CYLINDER.
4. Install brake line at rear brake caliper. See Chassis → REAR BRAKE CALIPER.
5. Install rear brake line retaining bracket.
   a. Install rear brake line bracket (2).
   b. Install screws (1). Tighten.
      Torque: 2.7–4.1 N·m (24–36 **in-lbs**) *Rear brake line*

bracket screws

6. Install brake line.
   a. Install clamps (6).
   b. Apply threadlocker to screws (5).
      LOCTITE 243 MEDIUM STRENGTH THREADLOCKER AND SEALANT (BLUE) (99642-97)
   c. Install screws. Tighten.
      Torque: 2.7–4.1 N·m (24–36 **in-lbs**) *Rear brake line clamp screws*

Complete

1. Install rear stoplamp switch. See **Electrical → REAR STOPLAMP SWITCH**.
2. Install battery tray. See **Electrical → BATTERY TRAY**.
3. Install battery. See **Maintenance → INSPECT BATTERY**.
4. Install negative battery cable. See **Electrical → POWER DISCONNECT**.
5. Install battery strap. See **Maintenance → INSPECT BATTERY**.
6. Install right side cover. See **Chassis → RIGHT SIDE COVER**.
7. Install seat. See **Chassis → SEAT**.
8. Bleed brake system. See **Chassis → BLEED BRAKES**.

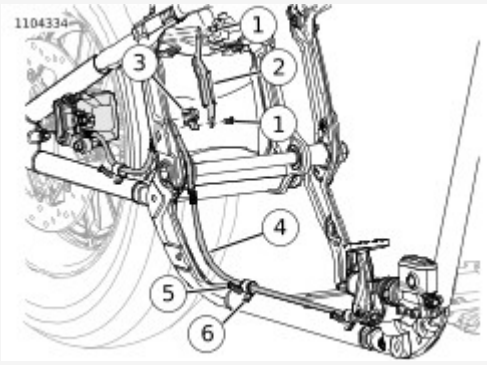

View interactive image

1	Screw (2)
2	Rear brake line bracket
3	Grommet
4	Brake line
5	Screw (3)
6	Clamp (3)

Figure 1. Rear Brake Line: (Non ABS)

Special Tools

Description	Part Number	Qty.
DIGITAL TECHNICIAN II	HD-48650	1

Prepare

1. Drain front brake lines. See **Chassis → BLEED BRAKES**.

Remove

1. See **Figure 1**. Remove brake line (5) from front brake master cylinder. See **Chassis → FRONT BRAKE MASTER CYLINDER**.
2. Remove brake line from manifold (4).
3. Remove brake line from wireform, if equipped.
4. Remove clamp, if equipped.
   a. Remove screw (1).
   b. Remove clamp (2).

Install

1. See **Figure 1**. Install brake line (5) at front master cylinder. See **Chassis → FRONT BRAKE MASTER CYLINDER**.
2. Install brake line at manifold (4). Tighten.
   Torque: 14.5–19.5 N·m (128–173 **in-lbs**) *Brake line tube nuts, manifold*
3. Install brake line into wireform, if equipped.
4. Install clamp, if equipped.
   a. Install clamp (2).
   b. Install screw (1). Tighten
      Torque: 4.1–5.4 N·m (36–48 **in-lbs**) *Brake clamp screw*

Complete

NOTE

DIGITAL TECHNICIAN II (Part Number:HD-48650) is required to properly bleed brake system.

1. Bleed brake system. See **Chassis → BLEED BRAKES**.

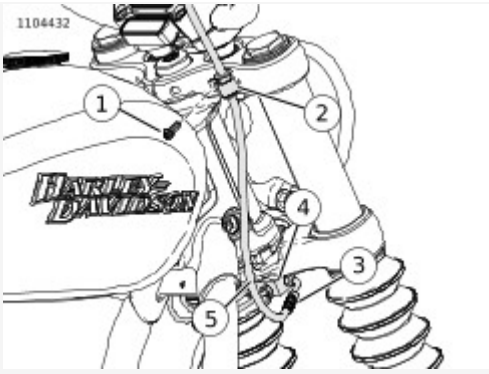

View interactive image

1	Screw
2	Clamp
3	Tube nut
4	Front brake line manifold
5	Brake line

Figure 1. Brake Line: Front Master Cylinder (ABS)

Special Tools

Description	Part Number	Qty.
DIGITAL TECHNICIAN II	HD-48650	1

Prepare

1. Drain front brake lines. See **Chassis → BLEED BRAKES**.

Remove

NOTE

If equipped with dual front calipers, remove brake lines from both calipers.

1. Remove brake line from front brake caliper. See **Chassis → FRONT BRAKE CALIPER**.
2. See **Figure 1**. Disconnect **ABS** (Anti-lock braking system) lines (4) from manifold (2). See **Chassis → BRAKE LINES → Front ABS Lines**.
3. Disconnect front master cylinder brake line (1) from manifold. See **Chassis → BRAKE LINES → Brake Line: Front Master Cylinder (ABS)**.
4. Remove brake line.
   a. Remove wire harness retainers (6).
   b. Remove Screw (5).
   c. Remove brake line (3).

Install

1. See **Figure 1**. Install brake line.
   a. Install brake line (3).
   b. Install screw (5). Tighten.
      Torque: 4.1–5.4 N·m (36–48 **in-lbs**) *Front brake line screw*
   c. Install wire harness retainers (6).
2. Install front master cylinder brake line (1) at manifold (2). See **Chassis → BRAKE LINES → Brake Line: Front Master Cylinder (ABS)**.
3. Install **ABS** lines (4) at manifold. See **Chassis → BRAKE LINES → Front ABS Lines**.
4.

   NOTE

   If equipped with dual front calipers, Install brake lines to both calipers.

   Install brake line (3) at front caliper. See **Chassis → FRONT BRAKE CALIPER**.

Complete

NOTE

DIGITAL TECHNICIAN II (Part Number:HD-48650) is required to properly bleed brake system.

1. Bleed brake system. See Chassis → BLEED BRAKES.

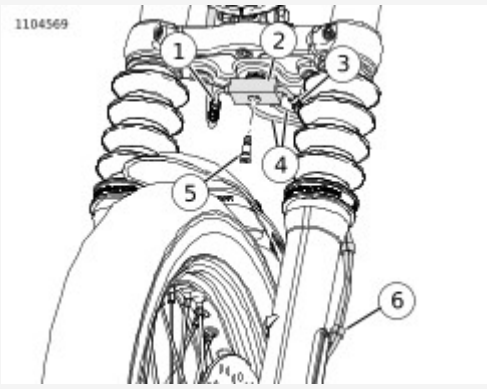

View interactive image

1	Front master cylinder brake line
2	Front brake line manifold
3	Brake line
4	ABS brake line (2)
5	Screw
6	Wire harness retainer (3)

Figure 1. Brake Line: Front Caliper (ABS)

Special Tools

Description	Part Number	Qty.
12MM TORQUE ADAPTER	HD-52351	1

Prepare

1. Remove main fuse. See Electrical → POWER DISCONNECT.
2. Remove seat. See Chassis → SEAT.
3. Remove fuel tank. See Fuel and Exhaust → FUEL TANK.
4. Drain front brake line. See Chassis → BLEED BRAKES.
5. Remove right side cover. See Chassis → RIGHT SIDE COVER.
6. Remove rear lighting caddy. See Electrical → REAR LIGHTING CADDY.

Remove

1. See Chassis → BRAKE LINES → Front ABS Lines → Front ABS Lines Clamps. Disconnect ABS lines (2, 4) from front brake line (1).
2. Remove P-clamp screws (3).
3. See Chassis → BRAKE LINES → Front ABS Lines → Rear Frame Cover For Front ABS Lines. Remove under seat frame cover (5).
   a. Remove front screw (4).
   b. Remove rear screws (6).
4. See Chassis → BRAKE LINES → Front ABS Lines → Front ABS Line Connections. Remove banjo bolts (1) from ABS module (5).
5. Remove brake lines from vehicle.
6. See Figure 2 and Figure 3. Remove P-clamps and grommets from brake lines.

Install

1. **NOTE**

   Under seat frame cover requires two grommets.

   See Figure 2 and Figure 3. Install grommets and P-clamps.
2. See Figure 4. Install brake lines to ABS module.

   Special Tool: 12MM TORQUE ADAPTER (HD-52351)

a. Install banjo bolt (1), **new** gaskets (4) and brake line (3).

b. Install banjo bolt (1), **new** gaskets (4) and brake line (2).

c. See **Chassis → BRAKE LINES → Front ABS Lines → HD-52351 In Use**. Tighten banjo bolts.
Torque: 23.1–25.8 N·m (17–19 ft-lbs) *Banjo bolt to ABS module*

> **NOTE**
>
> The torque wrench should be 90 degrees to special tool.

3. See **Chassis → BRAKE LINES → Front ABS Lines → Rear Frame Cover For Front ABS Lines**. Install under seat frame cover (5).
   a. Install rear screws (6). Tighten.
   Torque: 10.8–13.6 N·m (96–120 **in-lbs**) *Under seat frame cover, rear screw*
   b. Install front screw (4). Tighten.
   Torque: 2.3–3.4 N·m (20–30 **in-lbs**) *Under seat frame cover, front screw*
4. See **Chassis → BRAKE LINES → Front ABS Lines → Front ABS Lines Clamps**. Connect ABS lines (2, 4) to front brake line (1). Tighten.
   Torque: 14.5–19.5 N·m (128–173 **in-lbs**) *Front ABS brake line to front brake line*
5. Install P-clamp screws (3). Tighten.
   Torque: 4.1–5.4 N·m (36–48 **in-lbs**) *Front ABS brake line P-clamp screw*

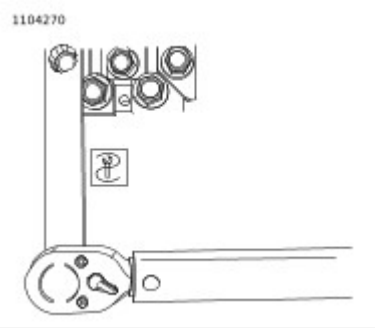

View interactive image

Figure 1. HD-52351 In Use

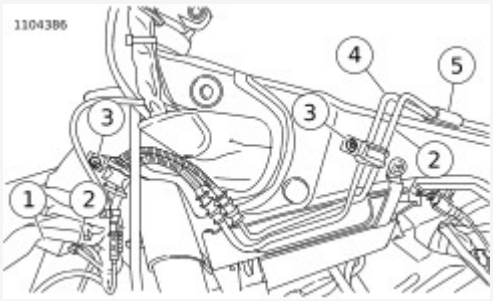

View interactive image

1	Front brake line
2	ABS module to front brake line
3	P-clamp screw (2)
4	Front master cylinder to ABS module brake line
5	Grommet (4)

Figure 2. Front ABS Lines Clamps

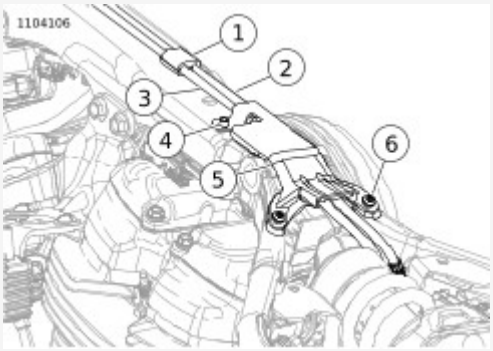

View interactive image

1	Grommet (4)
2	Front master cylinder to ABS module brake line
3	ABS Module to front brake line
4	Front screw
5	Under seat frame cover
6	Rear screw (2)

Figure 3. Rear Frame Cover For Front ABS Lines

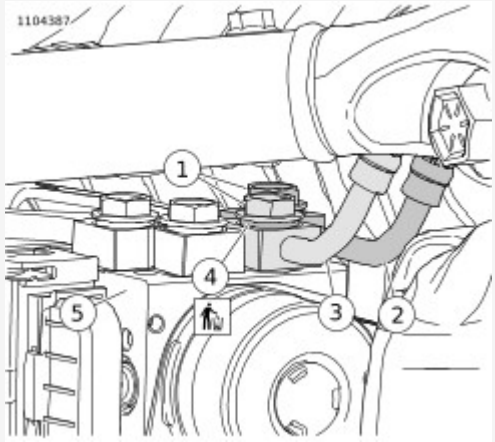

View interactive image

1	Banjo Bolt (2)
2	ABS module to front brake line
3	Front master cylinder to ABS module line
4	Gasket (4)
5	ABS module

Figure 4. Front ABS Line Connections

Complete

1. Install rear lighting caddy. See **Electrical → REAR LIGHTING CADDY**.
2. Bleed brake system. See **Chassis → BLEED BRAKES**.
3. Install right side cover. See **Chassis → RIGHT SIDE COVER**.
4. Install seat. See **Chassis → SEAT**.
5. Install fuel tank. See **Fuel and Exhaust → FUEL TANK**.
6. Install main fuse. See **Electrical → POWER DISCONNECT**.
7. Install left side cover. See **Chassis → LEFT SIDE COVER**.

Prepare

1. Drain fluid from rear brake. See Chassis → BLEED BRAKES.
2. Remove right side cover. See Chassis → RIGHT SIDE COVER.
3. Remove seat. See Chassis → SEAT.
4. Remove rear lighting caddy. See Electrical → REAR LIGHTING CADDY.
5. Remove battery and battery tray. See Maintenance → INSPECT BATTERY.
6. Remove rear stoplamp switch. See Electrical → REAR STOPLAMP SWITCH.

Remove

1. See Figure 1. Remove clamps.
   a. Remove screw (1).
   b. Remove clamp (2).
2. See Figure 2. Remove screws (4).
3. Remove bracket (5).
4. Remove banjo bolt (1) and gaskets (2) from master cylinder.
5. Remove banjo bolt (1) and gaskets (2) from ABS module.
6. Discard gaskets (2)
7. Remove brake line from clip (6).
8. Remove brake line (7).

Install

1. See Figure 2. Route brake line (7).
2.

   NOTE

   The torque wrench should be at a 90 degree angle or perpendicular to the special tool so the setting on the torque wrench will be applied.

   Install banjo bolt (1), **new** gaskets (2) and brake line (7) to ABS module. Tighten.
   Torque: 23.1–25.8 N·m (17–19 ft-lbs) *Banjo bolt to ABS module*
3. Install banjo bolt (1), **new** gaskets (2) and brake line (7) to master cylinder. Tighten.
   Torque: 29–31 N·m (21–23 ft-lbs) *Banjo bolt to master cylinder, rear*
4. Install bracket (5).
5. Install screws (4). Tighten.
   Torque: 2.7–4 N·m (24–35 **in-lbs**) *Rear brake line bracket*

screw

6. Attach brake line to clip (6).
7. See **Figure 1**. Install clamp.
   a. Install clamp (2).
   b. Install screw (1). Tighten.
      Torque: 2.7–4 N·m (24–35 **in-lbs**) *Clamp screw*

Complete

1. Install rear stoplamp switch. See **Electrical → REAR STOPLAMP SWITCH**.
2. Bleed brake system. See **Chassis → BLEED BRAKES**.
3. Install battery tray and battery. See **Maintenance → INSPECT BATTERY**.
4. Install rear lighting caddy. See **Electrical → REAR LIGHTING CADDY**.
5. Install seat. See **Chassis → SEAT**.
6. After installing seat, pull up on the seat to verify it is secure.
7. Install right side cover. See **Chassis → RIGHT SIDE COVER**.

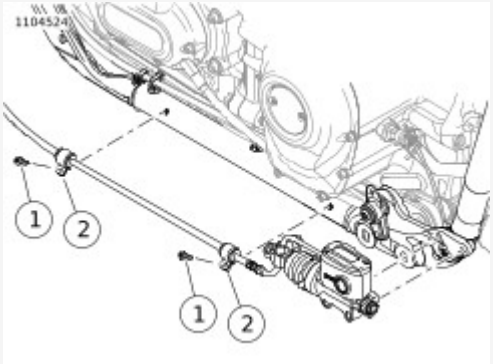

View interactive image

1	Screw (2)
2	Clamp (2)

Figure 1. Brake Line Clamp

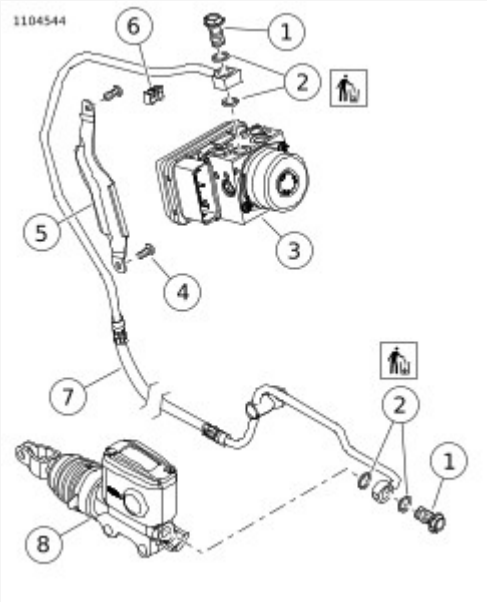

View interactive image

1	Banjo bolt (2)
2	Gasket (4)
3	ABS Module
4	Screw (2)
5	Bracket
6	Clip
7	Brake Line
8	Master cylinder

Figure 2. Master Cylinder Brake Line

Special Tools

Description	Part Number	Qty.
12MM TORQUE ADAPTER	HD-52351	1

Prepare

1. Remove right saddlebag, if equipped. See Chassis → SADDLEBAGS.
2. Drain fluid from rear brake. See Chassis → BLEED BRAKES.
3. Remove right side cover. See Chassis → RIGHT SIDE COVER.
4. Remove seat. See Chassis → SEAT.
5. Remove rear lighting caddy. See Electrical → REAR LIGHTING CADDY.
6. Remove battery and battery tray. See Maintenance → INSPECT BATTERY.

Remove

1. See Figure 1. Remove brake line from clip (1).
2. Remove clamp (2).
   a. Remove screw from clamp.
   b. Remove WSS wire from clamp.
3. See Figure 2. Remove screws (5).
4. Remove bracket (6).
5. Remove banjo bolt (3) and gaskets (2) from brake caliper.
6. Remove banjo bolt (3) and gaskets (2) from ABS module.
7. Discard gaskets (2)
8. Remove brake line (7).

Install

1. See Figure 2. Route brake line (7).
2.

   NOTE

   The torque wrench should be at a 90 degree angle or perpendicular to the special tool so the setting on the torque wrench will be applied.

   Install banjo bolt (3), **new** gaskets (2) and brake line (7) to ABS module. Tighten.
   Torque: 23.1–25.8 N·m (17–19 ft-lbs) *Banjo bolt to ABS module*

Special Tool: 12MM TORQUE ADAPTER (HD-52351)

3. Install banjo bolt (3), **new** gaskets (2) and brake line (7) to brake caliper. Tighten.
   Torque: 29–31 N·m (21–23 ft-lbs) *Banjo bolt to brake caliper, rear*
4. Install bracket (6).
5. Install screws (5). Tighten.
   Torque: 2.7–4 N·m (24–35 **in-lbs**) *Rear brake line bracket screw*
6. See Figure 1. Install clamp (2).
   a. Install WSS wire into clamp.
   b. Install screw. Tighten.
      Torque: 2.7–4 N·m (24–35 **in-lbs**) *Clamp screw*
7. Attach brake line to clip (1).

Complete

1. Bleed brake system. See Chassis → BLEED BRAKES.
2. Install battery tray and battery. See Maintenance → INSPECT BATTERY.
3. Install rear lighting caddy. See Electrical → REAR LIGHTING CADDY.
4. Install seat. See Chassis → SEAT.
5. After installing seat, pull up on the seat to verify it is secure.
6. Install right side cover. See Chassis → RIGHT SIDE COVER.
7. Install right saddlebag, if equipped. See Chassis → SADDLEBAGS.

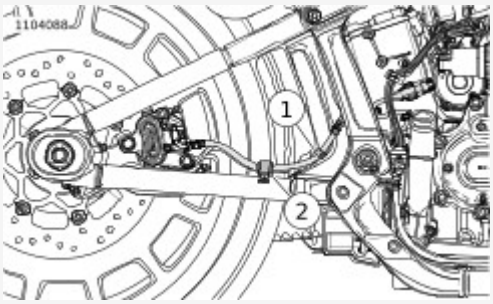

View interactive image

1	Clip
2	Clamp

Figure 1. Rear Brake Line

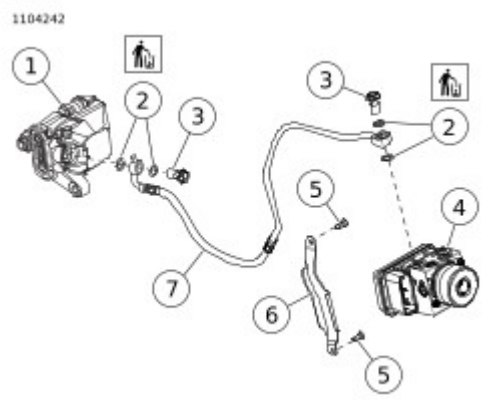

View interactive image

1	Rear caliper
2	Gasket (4)
3	Banjo bolt (2)
4	ABS Module
5	Screw (2)
6	Bracket
7	Brake line

Figure 2. Brake Line Routing

NOTE

The **ABS** (Anti-lock braking system) module consists of the **HCU** (Hydraulic control unit) and the **ECU** (Electronic control unit). The two are not serviced separately.

1. Remove seat. See **Chassis → SEAT**.
2. Disconnect negative battery cable. See **Electrical → POWER DISCONNECT**.
3. Remove right side cover. See **Chassis → RIGHT SIDE COVER**.
4. Drain fluid from system. See **Chassis → BLEED BRAKES**.
5. Disconnect brake lines from ABS module. See **Chassis → BRAKE LINES**.

NOTICE

This device is sensitive to electrostatic discharge (ESD). To prevent damage to the device, always touch the motorcycle frame or a grounded surface before handling. (00588c)

1. Remove ABS module.
   a. See **Chassis → ABS MODULE → Install → ABS Module**.
      Disconnect ABS connector (4).
   b. Remove cable straps (3).
   c. Remove side cover mounting stud (2).
   d. Remove screw (1).
   e. See **Chassis → ABS MODULE → Install → ABS Module Bracket**. Remove ABS module (3) with bracket.
   f. Remove screws (2).
   g. Remove bracket (1).

Special Tools

Description	Part Number	Qty.
DIGITAL TECHNICIAN II	HD-48650	1

NOTICE

This device is sensitive to electrostatic discharge (ESD). To prevent damage to the device, always touch the motorcycle frame or a grounded surface before handling. (00588c)

1. Install ABS module.
   a. See **Figure 2**. Install bracket (1).
   b. Install screws (2). Tighten.
      Torque: 10.8–13.5 N·m (96–119 **in-lbs**) *ABS Module bracket screw*
   c. Install ABS module (3) with bracket.
   d. See **Figure 1**. Install screw (1). Tighten.
      Torque: 10.8–13.5 N·m (96–119 **in-lbs**) *ABS Module frame screw*
   e. Install side cover mounting stud (2).
      Torque: 8.1–10.8 N·m (72–96 **in-lbs**) *Side cover mounting stud*
   f. Install cable straps (3).
   g. Connect ABS connector (4).
2. If installing a **new** ABS module, use DTII for set-up procedure:

   Special Tool: **DIGITAL TECHNICIAN II** (HD-48650)

   a. Choose the REFLASH icon.
   b. Follow the on-screen prompts.

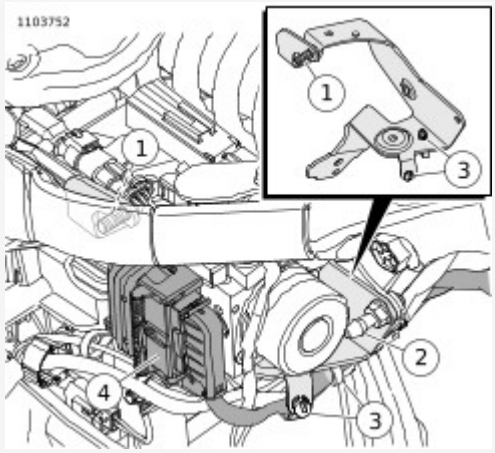

View interactive image

1	Screw
2	Side cover mounting stud

3	Cable strap (2)
4	Connector

Figure 1. ABS Module

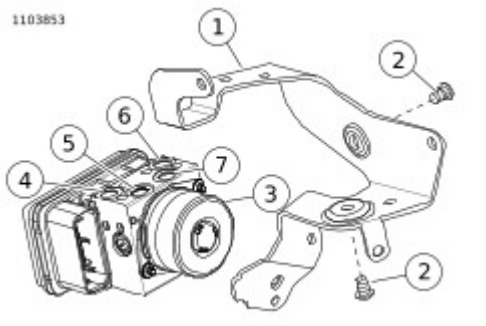

View interactive image

1	Bracket
2	Screw (2)
3	ABS Module
4	ABS module to rear brake line
5	Rear master cylinder to ABS module line
6	ABS module to front brake line
7	Front master cylinder to ABS module line

Figure 2. ABS Module Bracket

WARNING

When any hydraulic brake component, line or connection is loosened or replaced on an ABS motorcycle, Digital Technician II must be used during the brake bleeding procedure to verify all air is removed from the system. Failure to properly bleed the brake system could adversely affect braking, which could result in death or serious injury. (00585c)

1. Connect brake lines from ABS module. See **Chassis → BRAKE LINES**.
2. Bleed brake system. See **Chassis → BLEED BRAKES**.
3. Connect negative battery cable. See **Electrical → POWER DISCONNECT**.
4. Install seat. See **Chassis → SEAT**.
5. Install right side cover. See **Chassis → RIGHT SIDE COVER**.

WARNING

After repairing the brake system, test brakes at low speed. If brakes are not operating properly, testing at high speeds can cause loss of control, which could result in death or serious injury. (00289a)

6. Operate motorcycle at low speeds to verify that braking systems operate properly.

Special Tools

Description	Part Number	Qty.
BASIC VACUUM BRAKE BLEEDER	BB200A	1

NOTICE

DOT 4 brake fluid will damage painted and body panel surfaces it comes in contact with. Always use caution and protect surfaces from spills whenever brake work is performed. Failure to comply can result in cosmetic damage. (00239c)

NOTE

- Procedure for draining brake fluid is the same for both the front and the rear brake systems.
- For best results, use **BASIC VACUUM BRAKE BLEEDER (Part Number:BB200A)** to drain the brake systems.
- Both front and rear brake systems are affected when removing **ABS** (Anti-lock braking system) module.

1. Remove master cylinder reservoir cap of the affected system.
2. See **Figure 1**. Remove cap (1) from bleeder screw (2).
3. Using vacuum brake bleeder to drain system.

   Special Tool: **BASIC VACUUM BRAKE BLEEDER** (BB200A)

   a. Attach vacuum brake bleeder to a caliper bleeder screw. Loosen screw 3/4 turn.
   b. Operate vacuum bleeder to evacuate all fluid from master cylinder and line.
   c. **If needed:** Repeat with remaining calipers.
4. Using brake lever or pedal to drain system.
   a. Install end of a length of 7.9 mm (0.31 in) of the **ID** (Inside diameter) clear plastic tubing over bleeder screw.
   b. Place free end of tubing in a suitable container.
   c. Open bleeder screw one-half turn.
   d. Pump brake lever or pedal repeatedly to drain brake fluid.
5. Close bleeder screw. Tighten. **Chassis → BLEED BRAKES → Fill and Bleed → Torque Specifications**
6. Wipe out any remaining fluid inside master cylinder reservoir with a clean, lint-free cloth.

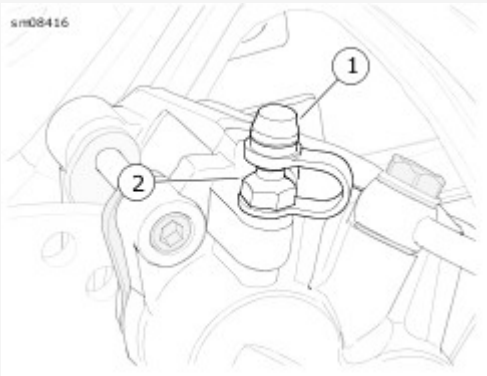

View interactive image

1	Cap
2	Bleeder screw

Figure 1. Bleeder Screw (Typical)

Special Tools

Description	Part Number	Qty.
BASIC VACUUM BRAKE BLEEDER	BB200A	1
DIGITAL TECHNICIAN II	HD-48650	1

WARNING

When any hydraulic brake component, line or connection is loosened or replaced on an ABS motorcycle, Digital Technician II must be used during the brake bleeding procedure to verify all air is removed from the system. Failure to properly bleed the brake system could adversely affect braking, which could result in death or serious injury. (00585c)

WARNING

Use denatured alcohol to clean brake system components. Do not use mineral-based solvents (such as gasoline or paint thinner), which will deteriorate rubber parts even after assembly. Deterioration of these components can cause brake failure, which could result in death or serious injury. (00291a)

WARNING

Contact with DOT 4 brake fluid can have serious health effects. Failure to wear proper skin and eye protection could result in death or serious injury.

- If inhaled: Keep calm, remove to fresh air, seek medical attention.
- If on skin: Remove contaminated clothing. Rinse skin immediately with plenty of water for 15-20 minutes. If irritation develops, seek medical attention.
- If in eyes: Wash affected eyes for at least 15 minutes under running water with eye lids held open. If irritation develops, seek medical attention.
- If swallowed: Rinse mouth and then drink plenty of water. Do not induce vomiting. Immediate medical attention required.
- See Safety Data Sheet (SDS) for more details available at sds.harley-davidson.com

(00240d)

NOTICE

DOT 4 brake fluid will damage painted and body panel surfaces it comes in contact with. Always use caution and protect surfaces from spills whenever brake work is performed. Failure to comply can result in cosmetic damage. (00239c)

- If DOT 4 brake fluid contacts painted surfaces, IMMEDIATELY flush area with clear water.

NOTICE

Do not allow dirt or debris to enter the master cylinder reservoir. Dirt or debris in the reservoir can cause improper operation and equipment damage. (00205c)

Verify front brake hand lever and rear brake foot pedal have a firm feel when applied. If not, bleed system as described.

1. Check for moisture content in brake fluid. See **Maintenance → CHECK AND REPLACE BRAKE FLUID**.

2.

NOTE

- For best results, use **BASIC VACUUM BRAKE BLEEDER (Part Number:BB200A)**, particularly if the brake system was drained completely. If a vacuum brake bleeder is not available, use the following procedure.
- **ABS Models:** Use **DIGITAL TECHNICIAN II (Part Number:HD-48650)** to verify that system is bled.

Remove bleeder screw cap. Install end of clear plastic tubing over bleeder screw and place free end in a clean container.

3. Position vehicle or handlebar so master cylinder reservoir is level.
4. Remove cover from master cylinder reservoir.

WARNING

A plugged or covered relief port can cause brake drag or lock-up, which could lead to loss of control, resulting in death or serious injury. (00288a)

5. Top off the reservoir. Verify proper operation of the master cylinder relief port by actuating the brake pedal or lever. A slight spurt of fluid breaks the fluid surface in the reservoir with internal components are working properly. See **Maintenance → CHECK AND REPLACE BRAKE FLUID**.
6.

NOTE

Pay careful attention to fluid level in the master cylinder reservoir. Add fluid before it empties to avoid drawing air into the brake lines.

Operate the brake lever or pedal to build hydraulic pressure.

7. While holding pressure with the brake lever or pedal:
   a. Open bleeder screw about three-quarter turn.
   b. Close bleeder screw as soon as the lever or pedal has moved full range of travel.
   c. Allow brake lever or pedal to return slowly to its released position.
8. Repeat steps until all air bubbles are purged and a solid column of fluid is observed in the bleeder tube.
9. Install bleeder screw cap. Tighten. **Refer to Table 1.**.
10. Check and fill reservoir to specified level. See **Maintenance → CHECK AND REPLACE BRAKE FLUID**.
11. **ABS Models:** Connect **DT II** (Digital technician) and perform "ABS Service" procedure.
12. Check operation of rear lamps.

WARNING

After repairing the brake system, test brakes at low speed. If brakes are not operating properly, testing at high speeds can cause loss of control, which could result in death or serious injury. (00289a)

13. Test ride motorcycle. Repeat the bleeding procedure if brakes feel spongy.

Table 1. Torque Specifications

COMPONENT[1]	TORQUE
Bleeder screws	3.9–6.9 N·m (35–61 **in-lbs**)
Banjo bolts	29–31 N·m (21–23 ft-lbs)
Reservoir cover screws	1–2 N·m (9–18 **in-lbs**)

(1) Applies to both front and rear brake systems.

Single screw side cover

1. See Chassis → LEFT SIDE COVER → Install → Left Side Cover. Remove side cover.
   a. Remove screw (1).
   b. Pull side cover (2) away to release grommet from mounting stud (3).
2. Remove bracket (4) if needed.

Two screw side cover

1. See Chassis → LEFT SIDE COVER → Install → Left Side Cover, horizontal screw. Remove side cover.
   a. Remove screw (1) and washers (2).
   b. Pull side cover (3) away to release grommets from mounting studs (4).

Consumables

Description	Part Number	Size
LOCTITE 243 MEDIUM STRENGTH THREADLOCKER AND SEALANT (BLUE)	99642-97	6 ml (¼ fl oz)

Single screw side cover

1. See Figure 1. Install bracket, if removed.
   a. Install bracket (4).
   b. Install screw securing bracket to frame. Tighten.
   Torque: 0.9–1.1 N·m (8–10 **in-lbs**) *Side cover, left side, bracket to frame screw*
2. Install side cover.
   a. Align side cover (2) with mounting studs (3).
   b. Press side cover until fully seated.
   c. Install screw (1). Tighten.
   Torque: 2.7–4.1 N·m (24–36 **in-lbs**) *Side cover screw, single screw*

Two screw side cover

1. See Figure 2. Install side cover.
   a. Align side cover (3) with mounting studs (4).
   b. Press side cover until fully seated.
   c. Apply threadlocker to screws (1).
   LOCTITE 243 MEDIUM STRENGTH THREADLOCKER AND SEALANT (BLUE) (99642-97)
   d. Install washers (2) and screws. Tighten.
   Torque: 6.8–9.5 N·m (60–84 **in-lbs**) *Side cover screw, horizontal screw*

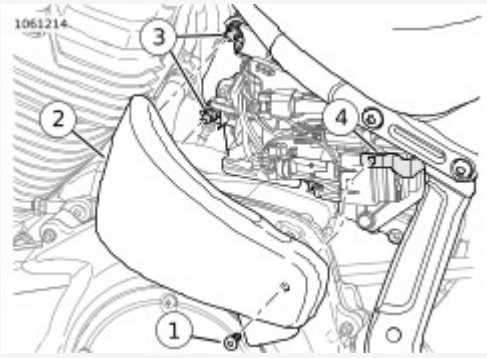

View interactive image

1	Screw
2	Left side cover
3	Mounting stud (2)
4	Bracket

Figure 1. Left Side Cover

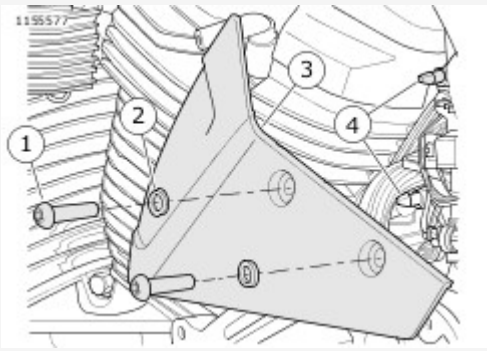

View interactive image

1	Screw (2)
2	Washer (2)
3	Left side cover
4	Mounting stud (2)

Figure 2. Left Side Cover, horizontal screw

Vertical Screws Side Cover

1. See **Chassis → RIGHT SIDE COVER → Install → Right Side Cover**. Remove side cover.
   a. Remove screws (1).
   b. Pull side cover (2) away to release grommet from mounting stud (3).

Horizontal Screws Side Cover

1. See **Chassis → RIGHT SIDE COVER → Install → Right Side Cover, Horizontal Screws**. Remove side cover.
   a. Remove screws (3) and washers (2).
   b. Pull side cover (4) away to release grommet from mounting stud (1).

Consumables

Description	Part Number	Size
LOCTITE 243 MEDIUM STRENGTH THREADLOCKER AND SEALANT (BLUE)	99642-97	6 ml (¼ fl oz)

Vertical Screws Side Cover

1. See Figure 1. Install side cover.
   a. Align side cover (2) with mounting stud (3).
   b. Press side cover until fully seated.
   c. Install screws (3). Tighten.
      Torque: 2.7–4.1 N·m (24–36 **in-lbs**) *Side cover screw, vertical screw*

Horizontal Screws Side Cover

1. See Figure 2. Install side cover.
   a. Align side cover (4) with mounting stud (1) and fender tail section (5).
   b. Press side cover until fully seated.
   c. Apply threadlocker to screws (3).
      LOCTITE 243 MEDIUM STRENGTH THREADLOCKER AND SEALANT (BLUE) (99642-97)
   d. Install washers (2) and screws. Tighten.
      Torque: 6.8–9.5 N·m (60–84 **in-lbs**) *Side cover screw, horizontal screw*

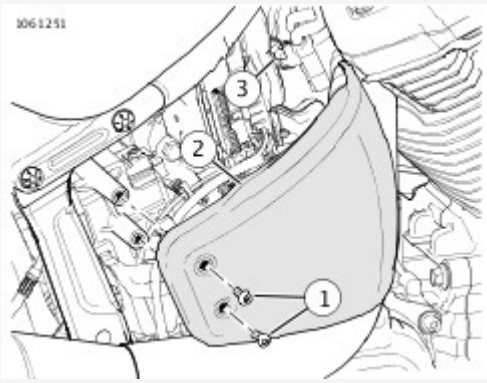

View interactive image

1	Screw and washer (2)
2	Right side cover

3	Mounting stud

Figure 1. Right Side Cover

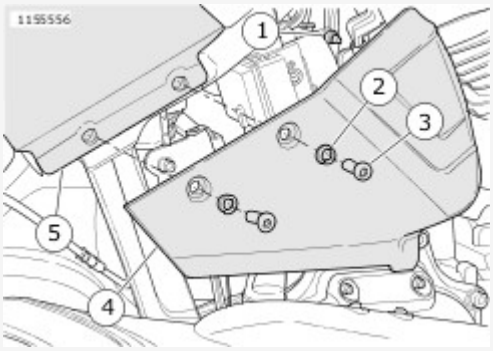

View interactive image

1	Mounting stud
2	Washers (2)
3	Screw (2)
4	Right side cover
5	Fender tail section

Figure 2. Right Side Cover, Horizontal Screws

Fork Oil Seals

The fork oil seal allows a fine film of oil to lubricate the fork sliding surface.

- The oil film is more visible after continuous high-speed compression and rebound movement.
- Due to greater lubrication needs, larger forks have a greater amount of oil film than smaller forks.

Check Oil Leak

1. Observe oil ring.
2. Wipe fork clean.
3. Ride motorcycle over bumpy road or complete six braking events.
4. See Figure 1. Check fork slider tube for oil.
    a. If a normal oil/dust film (1, 2) is present, there is no leak.
    b. If an oil run or drip (3) is present, perform procedure two or three more times to confirm oil leak.

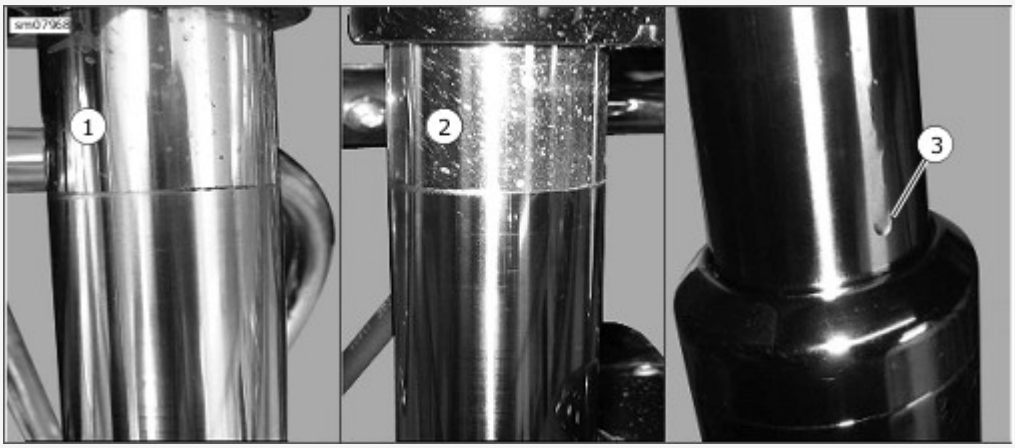

View interactive image

1	Normal oil/dust film
2	Normal oil/dust film
3	Drip

Figure 1. Front Forks

1. Remove front wheel. See **Chassis → FRONT WHEEL**.
2. Remove front fender. See **Chassis → FRONT FENDER**.
3. Remove windshield, if equipped. See **Chassis → WINDSHIELD**.
4. Remove front brake caliper(s). See **Chassis → FRONT BRAKE CALIPER**.
5. **FLDE, FLFB, FLFBS, FLHC, FLHCS**Remove rear headlamp nacelle panels. See **Chassis → HEADLAMP NACELLE**.

Remove

1. See Figure 1 or Figure 2. Remove front fork tube assemblies.
   a. Loosen the upper fork bracket pinch screws (1).
   b. Loosen the lower fork bracket pinch screws (4).
   c. Remove fork tube assemblies (5) from fork brackets (2, 3).

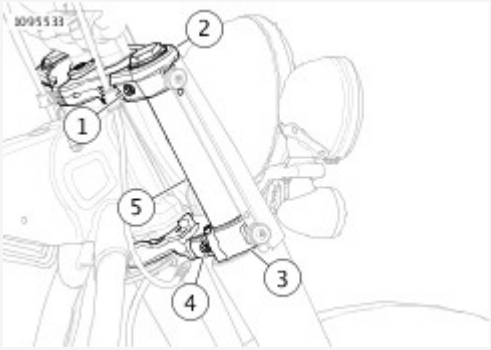

View interactive image

1	Upper fork bracket pinch bolt (2)
2	Upper fork bracket
3	Lower fork bracket
4	Lower fork bracket pinch bolt (2)
5	Fork tube assembly (2)

Figure 1. Four Pinch Bolt Fork Brackets

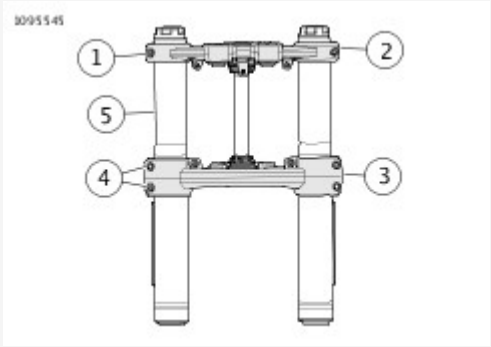

View interactive image

1	Upper fork bracket pinch bolt (2)
2	Upper fork bracket
3	Lower fork bracket

4	Lower fork bracket pinch bolt (4)
5	Fork tube assembly (2)

Figure 2. Six Pinch Bolt Fork Brackets

Install

1. Install front fork tube assemblies.
   a. See Figure 1. Install fork tube assemblies through lower and upper fork brackets.
   b. Set installed height (1) at dimension given and match left and right sides. Refer to Table 1.
   c. See Chassis → FRONT FORK → Remove → Four Pinch Bolt Fork Brackets or Chassis → FRONT FORK → Remove → Six Pinch Bolt Fork Brackets. Tighten lower fork bracket pinch bolt (4).
   Torque: 21.7–27.1 N·m (16–20 ft-lbs) *Fork bracket, lower, pinch bolt*

   NOTE

   For models equipped with two lower pinch bolts per side: Tighten alternately until torque specification is maintained.

   d. Tighten upper fork bracket pinch bolt (1).
   Torque: 21.7–27.1 N·m (16–20 ft-lbs) *Fork bracket, upper, pinch bolt*
   e. **FXBB:** See Chassis → FRONT FORK → Disassemble and Assemble: Standard → Standard Fork Components. Slide upper end of protector (5) up until it contacts underside of lower fork bracket.

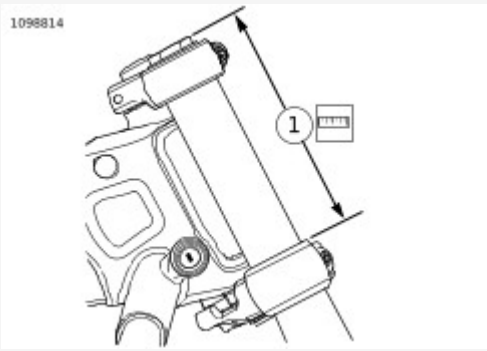

View interactive image

1	Fork tube installed height

Figure 1. Fork Height Dimension Location

Table 1. Front Fork Assembly Dimension

MODEL	DIMENSION
FLDE, FLHC, FLHCS	224.0–227.1 mm (8.82–8.94 in)

FLFB, FLFBS	227.1–230.1 mm (8.94–9.06 in)
FLSL	213.9–216.9 mm (8.42–8.54 in)
FXBB	200.7–203.7 mm (7.90–8.02 in)
FXBR, FXBRS	199.1–202.2 mm (7.84–7.96 in)
FXDRS	265.7–268.7 mm (10.46–10.58 in)
FXFB, FXFBS	232.4–235.5 mm (9.15–9.27 in)
FXLR	206.8–209.8 mm (8.14–8.26 in)

Special Tools

Description	Part Number	Qty.
FORK TUBE HOLDER	HD-41177	1
FORK SEAL DRIVER	HD-45305	1
FORK OIL LEVEL GAUGE	HD-59000B	1

WARNING

Wear safety glasses or goggles when servicing fork assembly. Do not remove slider tube caps without relieving spring preload or caps and springs can fly out, which could result in death or serious injury. (00297a)

Disassemble

Initial Disassembly

1. See Figure 1.Clamp fork tube in fork tube holder. Mount in vise with fork vertical.

   Special Tool: FORK TUBE HOLDER (HD-41177)

2. See Figure 2.
   a. Remove fork tube plug (1) and O-ring (21).
3.

   NOTE

   Have a suitable container ready to place spring assembly into after removal from tube.

   Pull spring collar (20), washer (19), and spring (18) out of fork tube (2).
4. Remove fork assembly from tool.

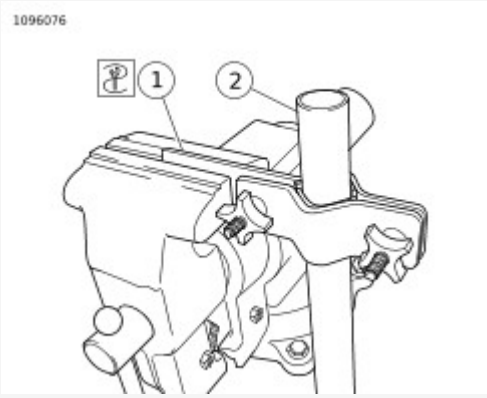

View interactive image

1	Fork tube holder
2	Fork tube

Figure 1. Fork Tube Holder

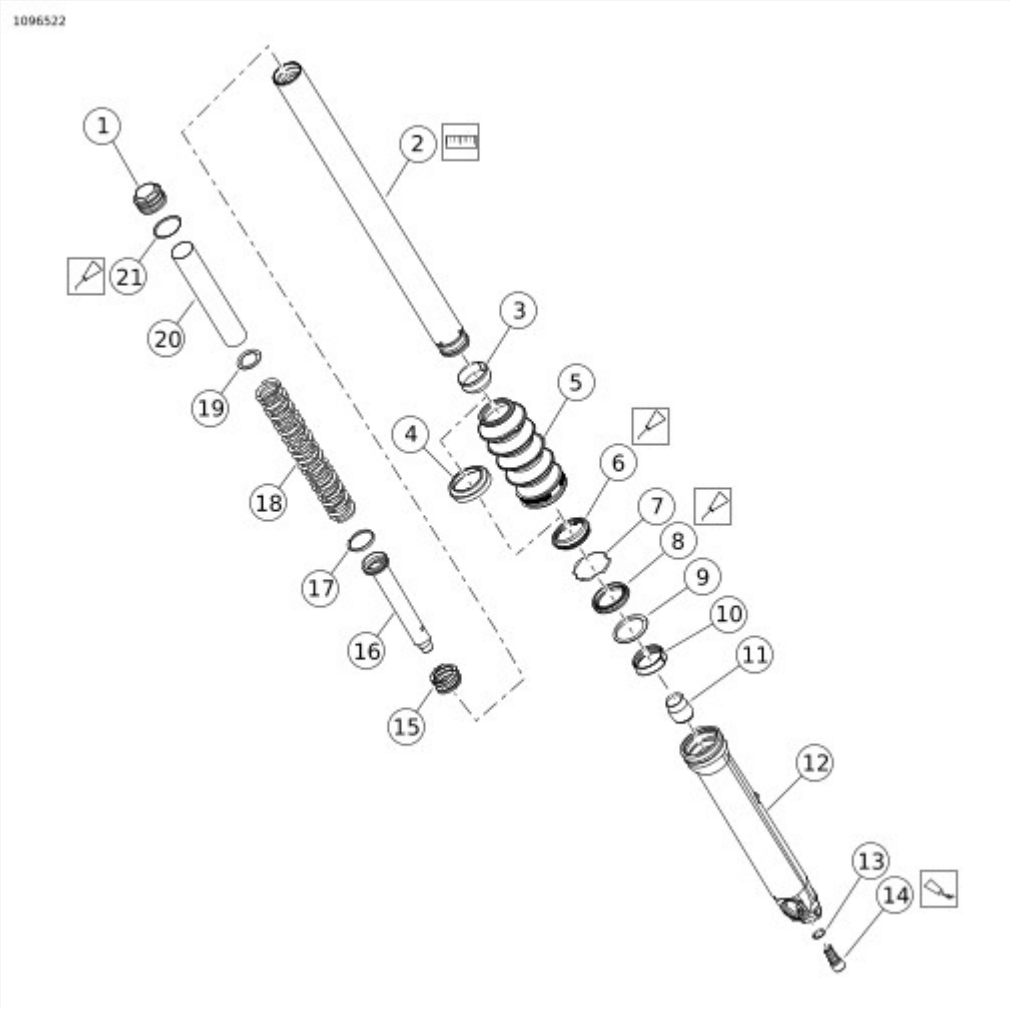

View interactive image

1	Fork tube plug
2	Fork tube
3	Lower slider bushing
4	Case cover (FXBR/S/ANX, FXLR)
5	Protector (FXBB)
6	Dust seal
7	Retaining ring
8	Slider oil seal
9	Seal spacer

10	Upper slider bushing
11	Lower stop
12	Slider
13	Washer
14	Screw
15	Damper tube spring
16	Damper tube
17	Damper tube ring
18	Spring
19	Washer
20	Spring collar
21	O-ring

Figure 2. Standard Fork Components

Fork Drain

1. **NOTE**

   Drain fork oil into a suitable container.

   Turn fork assembly upside down to drain fork oil.

   a. If only performing a fork oil change, see FORK FILL later in this procedure. If overhauling the fork assembly, continue with procedure.

Complete Disassembly

1. Separate slider from fork tube.

   NOTE

   Since there is little resistance to rotation when removing socket screw (14), the job is done more easily with an air impact wrench.

   a. Remove screw (14) with washer (13) from the bottom end of slider (12).
   b. **FXBR, FXBRS, FXBRS ANX, FXLR:** Remove case cover (4).
   c. **FXBB:** Remove protector (5).

d. Remove dust seal (6).

e. Compress retaining ring (7) and remove from slider (12).

2.

NOTE

The upper slider bushing (10) is a slight interference fit in slider (12). The upper bushing, seal spacer (9) and slider oil seal (8) are removed together.

Use the fork tube and lower slider bushing (3) as a slide hammer. Pull the fork tube in a quick continuous stroke. Continue this slide hammer action until the components are freed.

3. Push damper tube (16) and damper tube spring (15) free of fork tube (2) by inserting a small diameter rod through the opening in the bottom of tube.
4. Remove lower stop (11) from the lower end of damper tube (16).
5. Damper tube ring (17) can now be removed from the grooves at the top end of damper tube (16). Do not remove lower slider bushing (3) unless it requires replacement.

Clean and Inspect

1. Clean all parts.
2. Inspect parts for wear or damage. Replace parts if necessary.
3. Inspect OD of slider bushing and ID of fork tube bushing.
   a. If coating is worn through (metallic substrate showing), replace bushing.
   b. Inspect for distortion.
   c. If deep scratches or scoring are found, replace bushing. Also inspect mating components for similar wear. Replace or repair as necessary.
4. Check fork tube and slider for scoring, scratches and abnormal wear.
5. Inspect fork tube for nicks from stones and road debris, especially in area where seal contacts it. Replace if necessary.
6. See Figure 3. Check runout with a dial indicator.
   a. Set fork tube on V-blocks.
   b. Replace fork if runout exceeds dimension. Dimension: 0.2 mm (0.008 in)

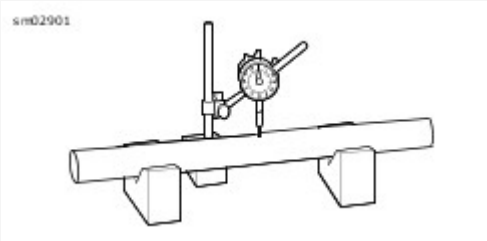

View interactive image

Figure 3. Measure Fork Tube Runout

Assemble

Initial Assembly

NOTE

Lubricate all seal lips, quad rings and O-rings with HARLEY DAVIDSON SEAL GREASE during assembly.

1. Install damper tube ring (17). Place damper tube spring (15) on damper tube (16). Insert damper tube into fork tube (2).
2. Insert spring (18) into fork tube (2), tapered side toward damper tube (15), and push bottom of damper tube through the opening at the bottom end of the fork tube. Place lower stop (11) over end of damper tube (16).
3. Apply LOCTITE 565 THREAD SEALANT to screw (14).
4. Position fork tube (2) and damper tube (16) in slider (12). Hold the assembly in place by exerting pressure on the spring. Install socket screw (14) with washer (13).
5. Tighten screw (14).
   Torque: 40–50 N·m (30–37 ft-lbs) *Fork damper tube screw, front*
   a. Remove spring (18).
6. Place upper slider bushing (10), seal spacer (9) and a **new** slider oil seal (8) (in that order) over fork slider (2). Verify that the lettered side of the seal is facing upward.
7. Place fork oil seal installer over fork slider (2). Seat upper slider bushing (10), seal spacer (9), and slider oil seal (8) into the slider bore by lightly tapping the components into place with the installation tool.

   Special Tool: **FORK SEAL DRIVER** (HD-45305)

8. Install retaining ring (7).
9. Install dust seal (6).
   a. **FXBB:** Install protector (5).
   b. **FXBR, FXBRS, FXBRS ANX, FXLR:** Install case cover (4).

Fork Fill

WARNING

Incorrect amount of fork oil can adversely affect handling and lead

to loss of vehicle control, which could result in death or serious injury. (00298a)

1. Fill fork tube.
   a. Fully compress fork.
   b. See Figure 4. Fill with TYPE "E" HYDRAULIC FORK OIL until oil level matches specification from top of fork tube with spring removed. Adjust oil level to specification using fork oil level gauge. Refer to Table 1

   Special Tool: FORK OIL LEVEL GAUGE (HD-59000B)

Table 1. Oil Level, Front Fork

MODEL	FLUID FILL DIMENSION
FLDE, FLHC, FLHCS, FLSL, FXBB, FXLR	118 mm (4.65 in)
FLFB, FLFBS	106 mm (4.17 in)
FXBR, FXBRS	99 mm (3.90 in)

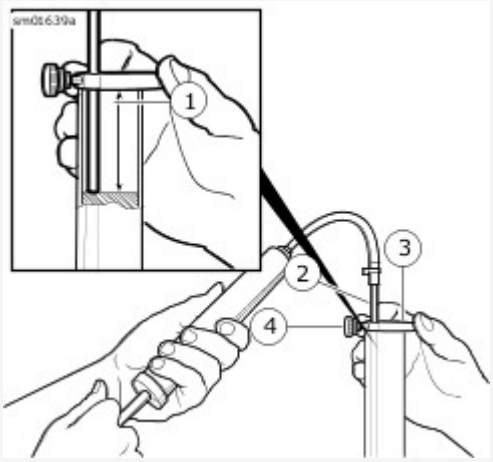

View interactive image

1	Fork oil level
2	Tube
3	Collar
4	Thumb lock

Figure 4. Oil Level Gauge

Complete Assembly

1. See **Figure 2**. Install fork spring.
   a. Fully extend fork. Install spring (18) with tightly wound end at bottom.
   b. Install washer (19) and spring collar (20).
2. Install fork tube plug.
   a. Install new O-ring (2).
   b. Install fork tube plug (1). Tighten.
      Torque: 30–80 N·m (22–59 ft-lbs) *Fork tube plug, standard*

Special Tools

Description	Part Number	Qty.
FORK SEAL DRIVER AND DUST BOOT INSTALLER (43MM)	B-42571	1
FORK TUBE HOLDER	HD-41177	1
FRONT FORK COMPRESSOR	HD-45966	1
FORK OIL LEVEL GAUGE	HD-59000B	1

Disassemble

Initial Disassembly

NOTICE

Exercise caution to avoid scratching or nicking fork tube. Damaging tube can result in fork oil leaks after assembly. (00421b)

1. See **Chassis → FRONT FORK → Disassemble and Assemble: Standard → Fork Tube Holder**.Clamp fork tube in fork tube holder. Mount in vise with fork vertical.

   Special Tool: **FORK TUBE HOLDER** (HD-41177)

2. See **Figure 1** .
   a. Remove fork tube plug (1).
   b. Compress fork assembly to expose cartridge damper (15) rod.
   c. Hold nut (10). Remove fork tube plug (1) from end of damper rod.
   d. Discard O-ring (2).

3. **NOTE**

   Have a suitable container ready to place spring into after removal from assembly.

   Remove spring from fork tube.
   a. Clamp front fork compressor vertically in vise with length adjuster screw topside.

Special Tool: **FRONT FORK COMPRESSOR** (HD-45966)

b. Compress fork spring.

c. See **Figure 2**. Remove nut (1).

d. Release fork spring.

e. See **Figure 1**. Remove spring seat stopper (11), spring collar (12) and spring joint (13).

f. Remove fork assembly from tool. Remove spring (14).

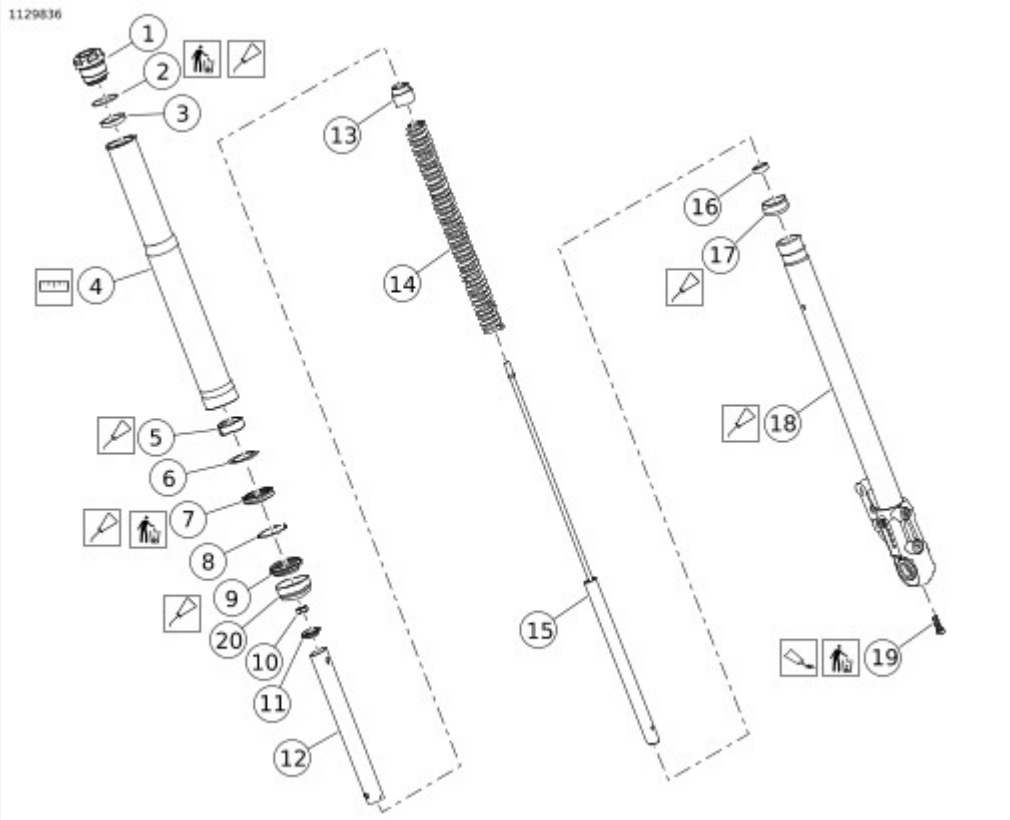

View interactive image

1	Fork tube plug
2	O-ring
3	Rubber stopper
4	Fork tube
5	Fork tube bushing
6	Seal Spacer
7	Oil seal
8	Retaining ring

9	Dust seal
10	Nut
11	Spring seat stopper
12	Spring collar
13	Spring joint
14	Spring
15	Cartridge damper
16	Centering plate
17	Slider bushing
18	Fork slider
19	Screw
20	Dust cover (FLSB)

Figure 1. Cartridge Fork (Left Side)

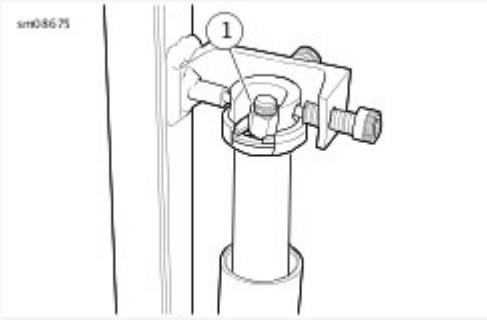

View interactive image

1	Locknut

Figure 2. Compress Fork Spring

Fork Drain

1. **NOTE**

   Drain fork oil into a suitable container.

   Drain fork oil.

   a. Thread rod extension tool (part of front fork compressor) onto end of damper rod.

Special Tool: **FRONT FORK COMPRESSOR** (HD-45966)

b. Turn fork assembly upside down over drain pan and slowly pump damper rod at least 20 times until rod moves freely.

c. If only performing a fork oil change, see FORK FILL later in this procedure. If overhauling the fork assembly, continue with procedure.

d. Remove extension tool from damper rod.

Complete Disassembly

1. See **Figure 1**. Remove cartridge damper (15).
   a. Place fork spring into fork tube.
   b. Place fork assembly upside down on a clean shop rag on the floor.
   c. While compressing spring (14) to prevent rotation of damper, remove screw (19). Use an air impact wrench for best results.
   d. Discard screw.
   e. Remove spring (14) and cartridge damper (15) from fork tube.
2.

   NOTE

   Do not bend or stretch oil seal retaining ring during removal.

   Remove fork tube.
   a. If equipped, separate dust cover (20) from fork tube (4).
   b. Separate dust seal (9) from fork tube.
   c. Remove retaining ring (8).
   d. Expand fork slider (18) and tube (4) against each other repeatedly (in a slide-hammer effect) to remove fork tube.
   e. Gently pry at split line to remove slider bushing (17).
   f. Remove fork tube bushing (5), seal spacer (6), oil seal (7), retaining ring (8), and dust seal (9). Discard oil seal.
   g. If equipped, remove dust cover (20).
3. Remove centering plate (16).

Clean and Inspect

1. Clean all parts.
2. Inspect parts for wear or damage. Replace parts if necessary.
3. Inspect OD of slider bushing and ID of fork tube bushing.
   a. If coating is worn through (metallic substrate showing),

replace bushing.

b. Inspect for distortion.

c. If deep scratches or scoring are found, replace bushing. Also inspect mating components for similar wear. Replace or repair as necessary.

4. Check fork tube and slider for scoring, scratches and abnormal wear.
5. Inspect fork tube for nicks from stones and road debris, especially in area where seal contacts it. Replace if necessary.
6. See **Chassis → FRONT FORK → Disassemble and Assemble: Standard → Measure Fork Tube Runout**. Check runout with a dial indicator.
   a. Set fork tube on V-blocks.
   b. Replace fork if runout exceeds dimension.
   Dimension: 0.2 mm (0.008 in)

Assemble

Initial Assembly

NOTICE

Exercise caution to avoid scratching or nicking fork tube. Damaging tube can result in fork oil leaks after assembly. (00421b)

NOTE

- Lubricate all seal lips, quad rings and O-rings with HARLEY-DAVIDSON SEAL GREASE during assembly.
- Use **FORK TUBE HOLDER (Part Number:HD-41177)** as necessary.
- Place dust seal with larger diameter end toward top of fork assembly.
- Place oil seal with lettering toward top of fork assembly.

1. See **Figure 1**. Assemble fork slider.
   a. If equipped, install dust cover (20) onto fork slider (18).
   b. Install dust seal (9), retaining ring (8), oil seal (7), seal spacer (6) and fork tube bushing (5) onto fork slider.
   c. Lightly coat fork slider (18) and slider bushing (17) with fork oil.
   d. Install slider bushing (17). Expand bushing only enough to fit onto fork slider (18).
   e. Install centering plate (16).
   f. Install fork slider (18) into fork tube (4).
   g. Slide cartridge damper (15) into fork slider (18).
   h. Apply LOCTITE 243 MEDIUM STRENGTH THREADLOCKER AND SEALANT (blue) to **new** screw (19).
   i. Install screw (19). Tighten.
   Torque: 15–25 N·m (11–18 ft-lbs) *Fork, cartridge screw*
2. Clamp fork slider horizontally in fork tube holder.

Special Tool: FORK TUBE HOLDER (HD-41177)

3. Install fork oil seal.
   a. Install fork tube bushing (5) and seal spacer (6).
   b. Assemble fork seal driver and dust boot installer (43mm) in front of oil seal (7). Long end of tool faces oil seal.

      Special Tool: FORK SEAL DRIVER AND DUST BOOT INSTALLER (43MM) (B-42571)

   c. Drive oil seal into fork tube until seated.
   d. Install retaining ring (8).
   e. Tap dust seal (9) into place.
   f. If equipped rotate dust cover (20) to match any removal burrs in slider. Tap dust cover into place.

Fork Fill

WARNING

Incorrect amount of fork oil can adversely affect handling and lead to loss of vehicle control, which could result in death or serious injury. (00298a)

1. Fill fork tube.
   a. Install damper rod extension tool.
   b. Fill with TYPE "E" HYDRAULIC FORK OIL until it is approximately 50.8 mm (2.0 in) from top of fork tube.
   c. Pump fork slider ten times to remove air from system.
   d. See Chassis → FRONT FORK → Disassemble and Assemble: Standard → Oil Level Gauge. Fully compress fork. Measure oil level from top of fork tube with spring removed. Adjust oil level to specification using fork oil level gauge. Refer to Chassis → FRONT FORK → Disassemble and Assemble: Inverted, Left Side → Oil Level, Left Fork.

      Special Tool: FORK OIL LEVEL GAUGE (HD-59000B)

Table 1. Oil Level, Left Fork

MODEL	FLUID FILL DIMENSION
FXDRS	122 mm (4.8 in)
FLSB	132 mm (5.2 in)
FXFB, FXFBS	137 mm (5.4 in)

Complete Assembly

1. Clamp fork slider vertically in fork tube holder.

   Special Tool: **FORK TUBE HOLDER** (HD-41177)

2. See **Figure 1**. Install fork spring.
   a. Fully extend fork. Install spring (14) with tightly wound end at bottom.
   b. Install spring joint (13) and spring collar (12).
   c. Compress fork using front fork compressor.

      Special Tool: **FRONT FORK COMPRESSOR** (HD-45966)

   d. Install spring seat stopper (11).
   e. Install nut (10) so that there is 14 mm (½ in) between top of nut and top of damper shaft.
3. Install fork tube plug.
   a. Install new O-ring (2).
   b. Install rubber stopper (3).
   c. Install fork tube plug (1) onto damper (15). Tighten.
      Torque: 17.5–22.5 N·m (13–16 ft-lbs) *Fork tube plug to damper nut*
   d. Install fork tube plug onto fork tube (4). Tighten.
      Torque: 29–39 N·m (22–28 ft-lbs) *Fork tube plug*

Special Tools

Description	Part Number	Qty.
FORK SEAL DRIVER AND DUST BOOT INSTALLER (43MM)	B-42571	1
FORK TUBE HOLDER	HD-41177	1
INNER FORK NUT REMOVER/INSTALLER	HD-47852	1
FORK OIL LEVEL GAUGE	HD-59000B	1

Disassemble

Initial Disassembly

NOTICE

Exercise caution to avoid scratching or nicking fork tube. Damaging tube can result in fork oil leaks after assembly. (00421b)

1. See **Chassis → FRONT FORK → Disassemble and Assemble: Standard → Fork Tube Holder**. Clamp fork tube in fork tube holder. Mount in vise with fork vertical.

   Special Tool: **FORK TUBE HOLDER** (HD-41177)

2. See **Figure 1**.
   a. Remove fork tube plug (1).
   b. Compress fork assembly to expose joint rod (7).
   c. Hold nut (5). Remove fork tube plug (1) from end of joint rod.
   d. Discard O-ring (2).

3. **NOTE**

   Have a suitable container ready to place spring assembly into after removal from tube.

   Remove spring assembly from fork tube.
   a. Using inner fork nut remover/installer remove inner fork nut (6).

Special Tool: **INNER FORK NUT REMOVER/INSTALLER** (HD-47852)

b. Remove nut (5) and joint rod (7).

c. Remove spring collar (8), washer (9) and spring (10).

d. Remove fork assembly from tool.

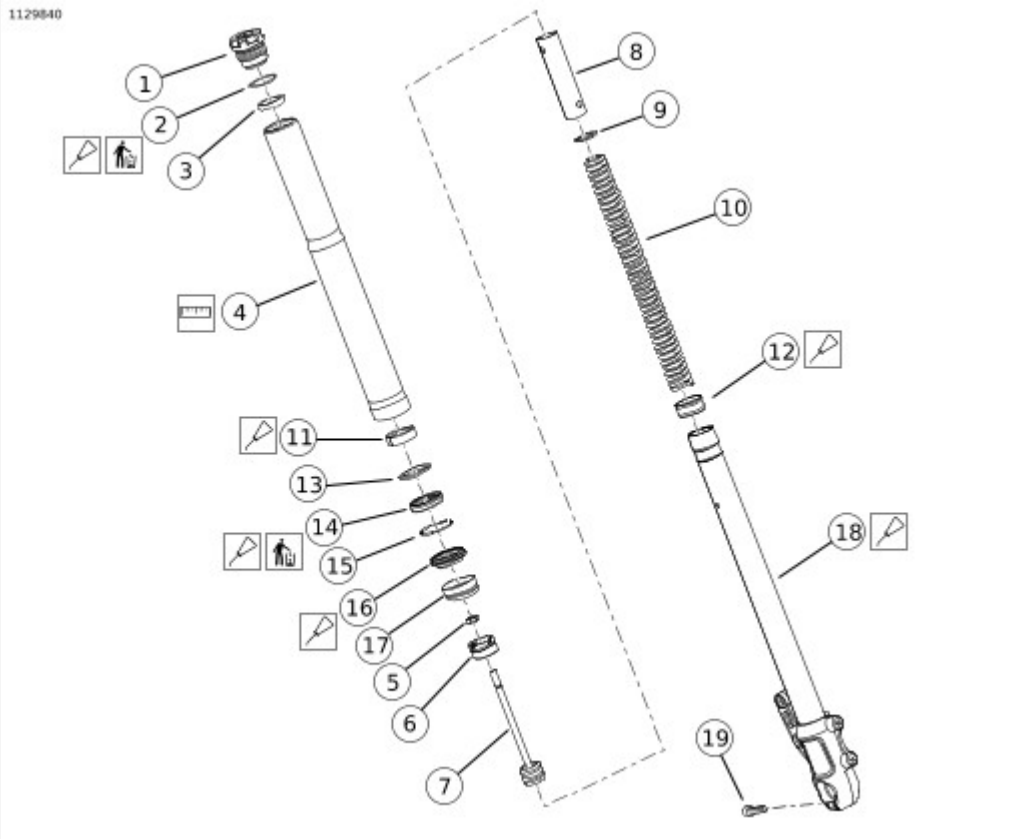

View interactive image

1	Fork tube plug
2	O-ring
3	Rubber stopper
4	Fork tube
5	Nut
6	Inner fork nut
7	Joint rod
8	Spring collar
9	Washer
10	Spring

11	Slider bushing
12	Fork tube bushing
13	Seal spacer
14	Oil seal
15	Retaining ring
16	Dust seal
17	Dust cover (FLSB)
18	Fork slider
19	Screw

Figure 1. Front Fork (Right Side)

Fork Drain

1. **NOTE**

   Drain fork oil into a suitable container.

   Turn fork assembly upside down to drain fork oil.

   a. If only performing a fork oil change, see FORK FILL later in this procedure. If overhauling the fork assembly, continue with procedure.

Complete Disassembly

1. See **Chassis → FRONT FORK → Disassemble and Assemble: Standard → Fork Tube Holder**. Clamp fork tube in fork tube holder. Mount in vise with fork vertical.

   Special Tool: **FORK TUBE HOLDER** (HD-41177)

2. Remove fork tube.

   NOTE

   Do not bend or stretch oil seal retaining ring during removal.

   a. If equipped, separate dust cover (17) from fork tube (4).
   b. Separate dust seal (16) from fork tube.
   c. Remove retaining ring (15).
   d. Expand fork slider (18) and fork tube (4) against each other repeatedly (in a slide-hammer effect) to remove fork tube.

e. Gently pry at split line to remove fork tube bushing (12).

f. Remove slider bushing (11), seal spacer (13), oil seal (14), retaining ring (15), and dust seal (16) from fork slider. Discard oil seal.

g. If equipped, remove dust cover (17).

Clean and Inspect

1. Clean all parts.
2. Inspect parts for wear or damage. Replace parts if necessary.
3. Inspect OD of slider bushing and ID of fork tube bushing.
   a. If coating is worn through (metallic substrate showing), replace bushing.
   b. Inspect for distortion.
   c. If deep scratches or scoring are found, replace bushing. Also inspect mating components for similar wear. Replace or repair as necessary.
4. Check fork tube and slider for scoring, scratches and abnormal wear.
5. Inspect fork tube for nicks from stones and road debris, especially in area where seal contacts it. Replace if necessary.
6. See **Chassis → FRONT FORK → Disassemble and Assemble: Standard → Measure Fork Tube Runout**. Check runout with a dial indicator.
   a. Set fork tube on V-blocks.
   b. Replace fork if runout exceeds dimension. Dimension: 0.2 mm (0.008 in)

Assemble

Initial Assembly

NOTICE

Exercise caution to avoid scratching or nicking fork tube. Damaging tube can result in fork oil leaks after assembly. (00421b)

NOTE

- Lubricate all seal lips, quad rings and O-rings with HARLEY-DAVIDSON SEAL GREASE during assembly.
- Use **FORK TUBE HOLDER (Part Number:HD-41177)** as necessary.
- Place dust seal with larger diameter end toward top of fork assembly.
- Place oil seal with lettering toward top of fork assembly.

1. See **Figure 1**. Assemble fork slider.
   a. If equipped, place dust cover (17) onto fork slider (18).

b. Place dust seal (16), retaining ring (15), oil seal (14), seal spacer (13) and slider bushing (11) onto fork slider.

c. Install fork tube bushing (12). Expand bushing only enough to fit onto fork slider (18).

d. Lightly coat fork slider (18) and fork tube bushing (12) with fork oil.

e. Install fork slider (18) into fork tube (4).

2. Clamp fork slider horizontally in fork tube holder.

Special Tool: **FORK TUBE HOLDER** (HD-41177)

3. Install fork oil seal.

a. Install slider bushing (11) and seal spacer (13).

b. Assemble fork seal driver and dust boot installer (43mm) in front of oil seal (14). Long end of tool faces oil seal.

Special Tool: **FORK SEAL DRIVER AND DUST BOOT INSTALLER (43MM)** (B-42571)

c. Drive oil seal into fork tube until seated.

d. Install retaining ring (15).

e. Install dust seal (16).

f. Tap dust seal into place.

g. If equipped, install dust cover (17).

h. Rotate dust cover to match any removal burrs in slider. Tap dust cover into place.

Fork Fill

WARNING

Incorrect amount of fork oil can adversely affect handling and lead to loss of vehicle control, which could result in death or serious injury. (00298a)

1. Fill fork tube.

a. Fully compress fork.

b. See **Chassis → FRONT FORK → Disassemble and Assemble: Standard → Oil Level Gauge**. Fill with TYPE "E" HYDRAULIC FORK OIL until oil level matches specification from top of fork tube with spring removed. Adjust oil level to specification using fork oil level gauge. Refer to **Table 1**.

Table 1. Oil Level, Right Fork

MODEL	FLUID FILL DIMENSION

FXDRS	128 mm (5.0 in)
FLSB	140 mm (5.5 in)
FXFB, FXFBS	141 mm (5.6 in)

Special Tool: **FORK OIL LEVEL GAUGE** (HD-59000B)

Complete Assembly

WARNING

Wear safety glasses or goggles when servicing fork assembly. Do not remove slider tube caps without relieving spring preload or caps and springs can fly out, which could result in death or serious injury. (00297a)

1. See **Figure 1**. Install fork spring.
   a. Fully extend fork. Install spring (10) with tightly wound end at bottom.
   b. Install washer (9) and spring collar (8).
   c. Install nut (5) and joint rod (7).
   d. Using inner fork nut remover/installer install inner fork nut (6).

      Special Tool: **INNER FORK NUT REMOVER/INSTALLER** (HD-47852)

   e. Tighten inner fork nut.
      Torque: 93–113 N·m (69–83 ft-lbs) *Fork, right, inner fork nut*
2. Install fork tube plug.
   a. Install new O-ring (2).
   b. Install rubber stopper (3).
   c. Install fork tube plug (1) onto joint rod (7). Tighten.
      Torque: 17.5–22.5 N·m (13–16 ft-lbs) *Fork tube plug to damper nut*
   d. Install fork tube plug onto fork tube (4). Tighten.
      Torque: 30–40 N·m (22–30 ft-lbs) *Fork tube plug*

1. **FLDE, FLFB, FLFBS, FLHC, FLHCS:** Install rear headlamp nacelle panels. See **Chassis → HEADLAMP NACELLE**.
2. Install front brake caliper(s). See **Chassis → FRONT BRAKE CALIPER**.
3. Install windshield, if equipped. See **Chassis → WINDSHIELD**
4. Install front fender. See **Chassis → FRONT FENDER**.
5. Install front wheel. See **Chassis → FRONT WHEEL**.

1. **FLDE, FLHC, FLHCS, FLHCS ANV:** Remove front light bar. See**Electrical → FRONT LIGHT BAR**
2. Remove headlamp. See **Electrical → HEADLAMP**
3. Remove handlebar. See **Chassis → HANDLEBAR**.
4. Support front of motorcycle enough to take weight off of front tire without lifting. See **Maintenance → GENERAL → Secure the Motorcycle for Service**.

Upper Fork Bracket

1. See **Chassis → STEERING HEAD/FORK STEM AND BRACKET ASSEMBLY → Install → Fork Clamp Components (Typical)**. Remove upper fork bracket assembly.
   a. Loosen fork stem pinch bolt (4).
   b. Remove fork stem screw (1) and washer (2).
   c. Remove upper fork bracket (3).

Lower Fork Bracket

1. Secure lower fork bracket to frame.
2. Remove upper fork bracket.
3. Remove front fork. See **Chassis → FRONT FORK**.
4. Remove fork stem and lower fork bracket assembly (10) from steering head.

Special Tools

Description	Part Number	Qty.
UNIVERSAL DRIVER HANDLE	HD-33416	1
STEERING HEAD BEARING RACE REMOVER	HD-39301-A	1

1. Clean all parts.
2. Inspect fork stem and upper and lower brackets. Replace as necessary.

> **NOTICE**
>
> Replace both bearing assemblies even if one assembly appears to be good. Mismatched bearings can lead to excessive wear and premature replacement. (00532c)

3. Inspect bearings for the following conditions:

- Pitting
- Wear
- Scoring

Replace as necessary.

4. Inspect bearing cups. Replace as necessary
   a. Remove bearing cups from steering head using **STEERING HEAD BEARING RACE REMOVER (Part Number:HD-39301-A)** and **UNIVERSAL DRIVER HANDLE (Part Number:HD-33416)**.
   b. Install **new** steering head bearing cups.

Consumables

Description	Part Number	Size
SPECIAL PURPOSE GREASE	99857-97A	414 ml (14 fl oz)

WARNING

Properly seat bearing cups in steering head bore. Improper seating can loosen fork stem bearings adversely affecting stability and handling, which could result in death or serious injury. (00302a)

WARNING

Properly adjust fork stem bearings. Improper adjustments can adversely affect stability and handling, which could result in death or serious injury. (00301c)

Lower Fork Bracket

1. See Figure 1. Install front fork stem and lower fork bracket assembly.
   a. Install **new** dust seal (6) over fork stem and lower fork bracket assembly (10).
   b. Apply SPECIAL PURPOSE GREASE (99857-97A) to lower steering head bearing (7).
   c. Install lower steering head bearing.
   d. Install fork stem through steering head.
   e. Apply SPECIAL PURPOSE GREASE (99857-97A) to upper steering head bearing.
   f. Install upper steering head bearing and **new** dust seal (6).
2. Install upper fork bracket (3).

Upper Fork Bracket

1. See Figure 1. Install upper fork bracket (3) assembly.
   a. Install washer (2) and fork stem screw (1). Tighten.
      Torque: 18.1–19 N·m (160–168 **in-lbs**) *Fork stem screw, first torque*
   b. Loosen fork stem screw.
      Angle: 45°
   c. Final tighten fork stem screw. Tighten.
      Torque: 7–7.6 N·m (62–67 **in-lbs**) *Fork stem screw, final torque - All except FXDRS*
      Torque: 11.3–12.4 N·m (100–110 **in-lbs**) *Fork stem screw, final torque - FXDRS*
   d. Tighten fork stem pinch bolt (4).
      Torque: 21.7–27.1 N·m (16–20 ft-lbs) *Fork stem pinch bolt - All except FXDRS*
      Torque: 38–43.4 N·m (28–32 ft-lbs) *Fork stem pinch bolt - FXDRS*

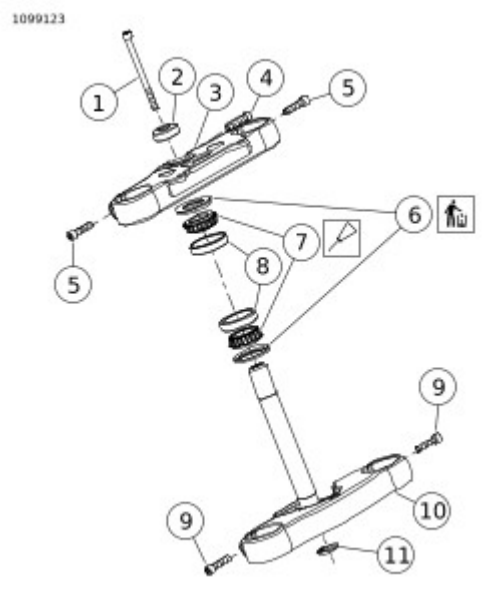

View interactive image

1	Fork stem screw
2	Washer
3	Upper fork bracket
4	Fork Stem Pinch Bolt
5	Upper fork clamp pinch bolt (2)
6	Dust seal (2)
7	Steering head bearing (2)
8	Bearing cup (2)
9	Lower fork bracket pinch bolt (2) [FLSL, FXBR, FXBRS, FXDRS, FXFB, FXFBS (4)]
10	Fork stem and lower fork bracket assembly
11	Fork stem retaining ring

Figure 1. Fork Clamp Components (Typical)

1. Install front fork. See **Chassis → FRONT FORK**.
2. Install handlebar. See **Chassis → HANDLEBAR**.
3. Install headlamp. See **Electrical → HEADLAMP**
4. **FLDE, FLHC, FLHCS, FLHCS ANV:** Install front light bar. See **Electrical → FRONT LIGHT BAR**
5. Adjust steering head bearings. See **Maintenance → ADJUST AND LUBRICATE STEERING HEAD BEARINGS**.

1. Remove left side cover. See **Chassis → LEFT SIDE COVER**.
2. Remove main fuse. See **Electrical → POWER DISCONNECT**.
3. Remove seat. See **Chassis → SEAT**.
4. Remove fuel tank. See **Fuel and Exhaust → FUEL TANK**.
5. Remove frame plug and front electrical caddy. See **Electrical → FRONT ELECTRICAL CADDY**.

1. Turn forks to full right position.
2.

NOTE
Fork lock mounting screw has **left handed threads**.

   Remove fork lock mounting screw through hole in lower fork clamp.
3. See **Chassis → FORK LOCK → Install → Fork Lock Location**.
   Remove fork lock (1) and gasket (2).

1. Turn handlebars to full right position, aligning hole in lower fork clamp with mounting hole for fork lock fastener.
2.

NOTE
Fork lock needs to be in the retracted/unlocked position for installation.

   See Figure 1. Place fork lock and gasket in position.
3. Install fork lock mounting screw. Tighten.
   Torque: 6.1–8.9 N·m (54–79 **in-lbs**)

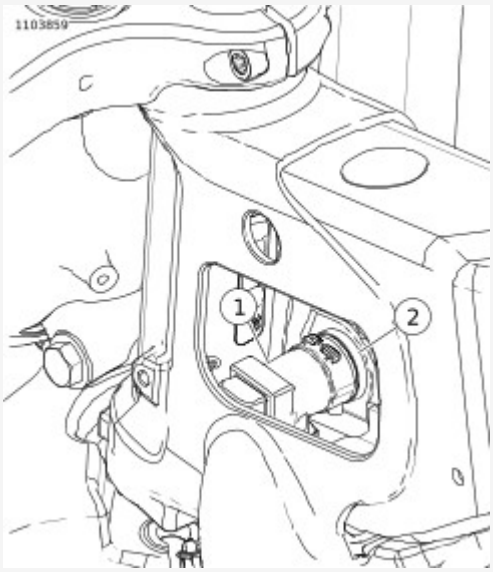

View interactive image

1	Fork lock
2	Gasket

Figure 1. Fork Lock Location

1. Verify proper operation of fork lock.
2. Install electrical caddy and frame plug. See **Electrical → FRONT ELECTRICAL CADDY**.
3. Install fuel tank. See **Fuel and Exhaust → FUEL TANK**.
4. Install seat. See **Chassis → SEAT**.
5. Install main fuse. See **Electrical → POWER DISCONNECT**.
6. Install left side cover. See **Chassis → LEFT SIDE COVER**.

1. Remove negative battery cable. See **Electrical → POWER DISCONNECT**.
2. **FXDRS:** Remove seat. See **Chassis → SEAT**
   a. Disconnect rear lighting connectors.
3. Remove saddlebags, if equipped. See **Chassis → SADDLEBAGS**.
4. **All except FXDRS:** Remove mufflers and exhaust bracket. See **Fuel and Exhaust → EXHAUST SYSTEM**.
5. **FXDRS:** Remove exhaust system. See **Fuel and Exhaust → EXHAUST SYSTEM**
6. **All except FXDRS:** Remove brake line P-clip from rear fork. See **Chassis → BRAKE LINES**.
7. Remove belt guards. See **Chassis → BELT GUARDS**.
8. **FXDRS:** Remove inner fender. See Disassemble and Assemble; Tail Section in **Chassis → REAR FENDER**
9. **FXDRS:** Remove rear lighting bracket. See **Chassis → REAR LIGHTING BRACKET**
10. Remove rear wheel. See **Chassis → REAR WHEEL**.
11. **FXDRS:** Remove mud guard. See **Chassis → MUD GUARD**
12. **All except FXDRS:** Remove drive belt. See **Drive and Transmission → DRIVE BELT**.
13. **FXDRS:** Remove rear **WSS** (Wheel speed sensor). See **Electrical → REAR WHEEL SPEED SENSOR (WSS)**
14. Remove lower shock screw. See **Chassis → REAR SHOCK ABSORBER**.

Remove

1. See Figure 1 or Figure 2. Remove splash guard.
   a. Remove screw (1).
   b. Pull bottom of splash guard (2) out and down to remove.
2. Remove rear fork.
   a. Support rear of transmission and frame.
   b. Support rear fork (3).
   c. Remove nut (7).
   d. Loosen pinch bolt (8).
   e. Remove pivot shaft (9) and spacer (6).
   f. Remove rear fork.

Install

1. See Figure 1 or Figure 2. Install splash guard.
   a. Place the bottom tabs on splash guard (2) into the slots on rear fork (3).
   b. Slightly bend the splash guard top mounting tabs and push the top onto the stubs (13) protruding from the fork.
   c. Install screw (1). Tighten.
      Torque: 3.9–5.1 N·m (35–45 **in-lbs**) *Splash guard screw*
2. Install rear fork.
   a. Align rear fork (3) with frame.
   b. Lift top of drive belt (9). Install pivot shaft through right side of frame, rear fork (3), transmission fork mount, drive belt, spacer (6) and left side of frame.
   c. Install pivot shaft nut (7). Tighten.
      Torque: 34–41 N·m (25–30 ft-lbs) *Rear fork pivot shaft nut, first torque*
   d. Back off pivot shaft nut.
      Angle: 90°
   e. Tighten pivot shaft nut.
      Torque: 0.1–5.4 N·m (1–48 **in-lbs**) *Rear fork pivot shaft nut, second torque*
   f. Install lower shock bolt. See Chassis → REAR SHOCK ABSORBER.

      NOTE

      Verify spacer (6) does not have lateral play.

   g. Install belt slot spacer. See Drive and Transmission → DRIVE BELT.
   h. Install rear wheel. See Chassis → REAR WHEEL.

      NOTE

Adjust the belt tension after the drive belt slot spacer screws have been torqued to final specifications and before the pivot shaft nut has been torqued to final specifications.

i. Tighten pivot shaft nut (7).
Torque: 209–230 N·m (154–170 ft-lbs) *Rear fork pivot shaft nut, third torque*

j. Back off pivot shaft nut.
Angle: 90°

k. Tighten pivot shaft nut.
Torque: 209–230 N·m (154–170 ft-lbs) *Rear fork pivot shaft nut, final torque*

NOTE

After final torque of pivot shaft nut there will still be a slight gap between the right side bearing and rear fork.

l. Tighten pivot shaft pinch bolt (8).
Torque: 24–27 N·m (18–20 ft-lbs) *Rear fork pivot shaft pinch bolt*

NOTE

Verify spacer (6) does not have lateral play.

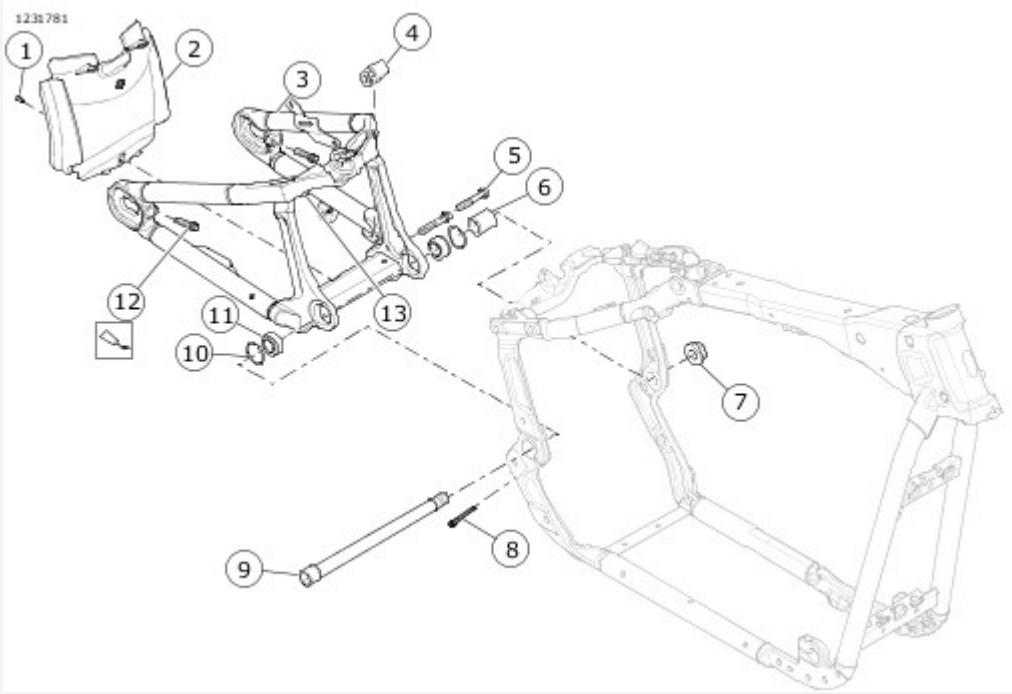

View interactive image

1	Splash guard screw

2	Splash guard
3	Rear fork
4	Belt slot spacer
5	Belt slot spacer screw (2)
6	Spacer
7	Pivot shaft nut
8	Pivot shaft pinch bolt
9	Pivot shaft
10	Retaining ring (2)
11	Bearing (2)
12	Adjusting screw (2)
13	Splash guard stubs (2)

Figure 1. Rear Fork Assembly: All except FXDRS

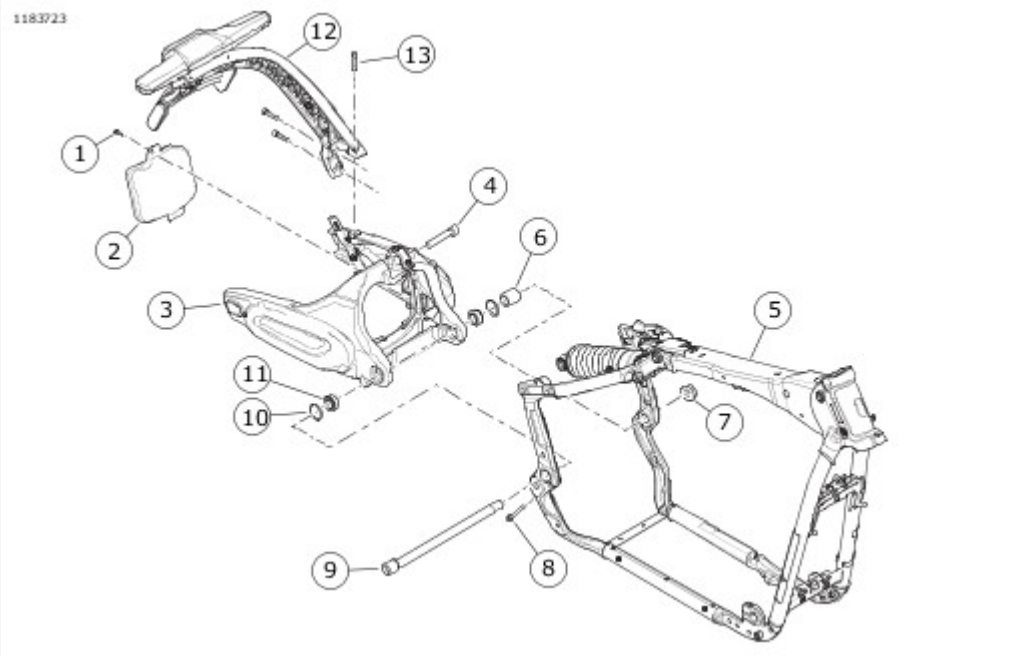

View interactive image

1	Splash guard screw
2	Splash guard
3	Rear fork
4	Rear shock screw

5	Frame
6	Spacer
7	Pivot shaft nut
8	Pivot shaft pinch bolt
9	Pivot shaft
10	Retaining ring (2)
11	Bearing (2)
12	Rear light bracket
13	Rear lighting bracket screw (3)

Figure 2. Rear Fork Assembly: FXDRS

Special Tools

Description	Part Number	Qty.
BEARING REMOVER/INSTALLER TOOL	HD-46281	1

Disassemble

1. See Figure 1. Remove bearings from rear fork using.

   Special Tool: BEARING REMOVER/INSTALLER TOOL (HD-46281)

   NOTE

   Remove bearings only if replacement is required.

2. See Figure 2. Remove adjusting screws (1).

Clean and Inspect

1. See Figure 2. Clean all components in solvent.
2. Dry parts with low-pressure, compressed air.
3. Carefully inspect bearings (2) for wear and/or corrosion. Replace or repair as necessary.
4. Verify that the bearing retaining rings (3) are not bent or damaged. Replace or repair as necessary.
5. If the bearings were removed, clean the bearing bores (4) with a clean shop towel, removing any dirt or grit adhering to the bearing surface.
6. Rough check rear fork (5) for correct alignment or damage. Replace if bent or damaged.
7. Clean threads on adjustment screws (1) and adjusting screw holes.

Assemble

1. See Figure 2. Install adjusting screw.
   a. Inspect condition of adjusting screws (1) and replace if necessary.
   b. Install adjusting screws.
2. Install bearings.
   a. Install **new** retaining rings (3) onto grooves on **new** bearings (2) if removed.
   b. See Figure 3. Position left bearing squarely on left bearing bore.
   c. Press left bearing into fork bearing bore until retaining ring

bottoms out.

d. Position right bearing on right bearing bore.

e. See **Figure 4**. Press right bearing into fork bearing bore leaving a gap.
Length: 1.47–3.2 mm (0.06–0.13 in)

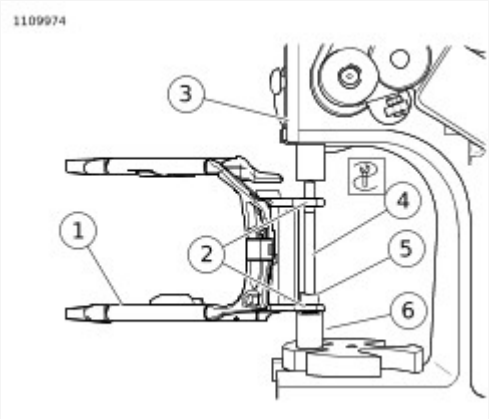

View interactive image

1	Rear fork
2	Bearing boss
3	Press
4	Handle
5	Pilot
6	Receiver cup

Figure 1. Removing Rear Fork Bearings

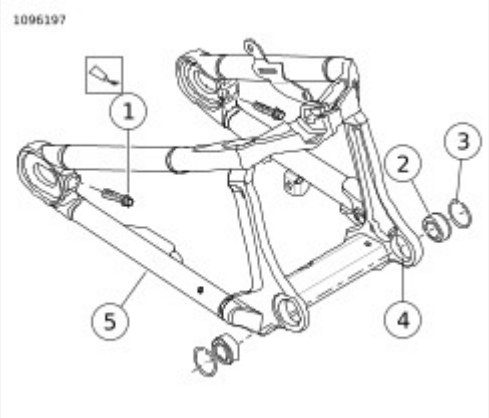

View interactive image

1	Adjusting screw (2)

2	Bearing (2)
3	Retainer ring (2)
4	Bearing bore (2)
5	Rear fork

Figure 2. Rear Fork Bearings

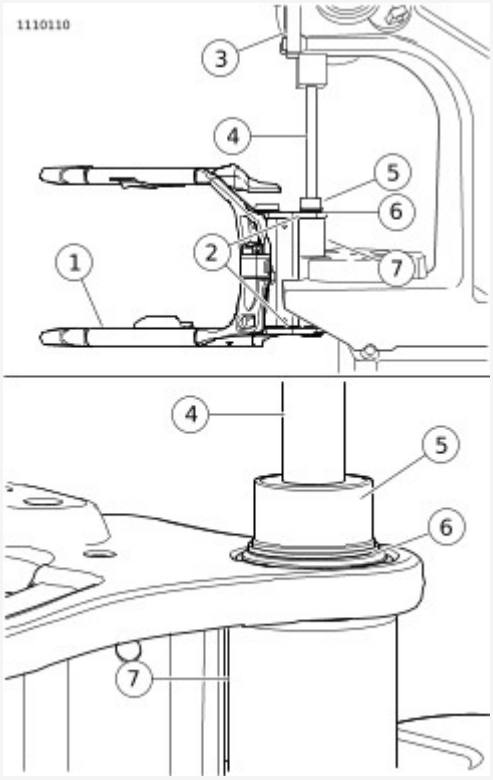

View interactive image

1	Rear fork
2	Bearing boss
3	Press
4	Handle
5	Pilot
6	Bearing
7	Receiver cup

Figure 3. Installing Rear Fork Bearings

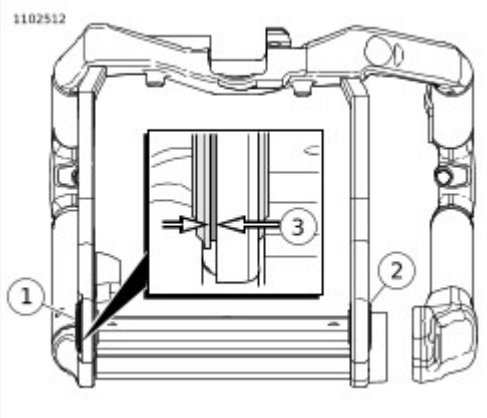

View interactive image

1	Right side bearing
2	Left side bearing
3	Gap

Figure 4. Rear Fork Bearing Gap

Special Tools

Description	Part Number	Qty.
UNIVERSAL DRIVER HANDLE	HD-33416	1
BEARING REMOVER/INSTALLER TOOL	HD-46281	1

Disassemble

Splash Guard

1. See Figure 1. Remove splash guard screw (3).
2. Remove splash guard (6).

Shock Clamp

1. See Figure 1. Remove shock clamp screws (4,5) and shock clamp (7).

Rear Lighting Harness

1. Remove Rear lighting harness caddy screws (1).
2. Remove anchor cable straps (2).
3. See Figure 2. Remove anchor cable straps (1).
4. Remove rear lighting harness (3).

Rear Fork Bearings

NOTE

Remove bearings only if replacement is required.

1. See Figure 4. Remove bearings from rear fork using.

   Special Tool: BEARING REMOVER/INSTALLER TOOL (HD-46281)

   Special Tool: UNIVERSAL DRIVER HANDLE (HD-33416)

Clean and Inspect

1. See Figure 3. Clean all components in solvent.
2. Dry parts with low-pressure, compressed air.
3. Carefully inspect bearings (2) for wear and/or corrosion. Replace or repair as necessary.
4. Verify that the bearing retaining rings (3) are not bent or damaged. Replace or repair as necessary.
5. If the bearings were removed, clean the bearing bores (4) with a clean shop towel, removing any dirt or grit adhering to the bearing surface.
6. Rough check rear fork (1) for correct alignment or damage. Replace if bent or damaged.

Assemble

Splash Guard

1. Install splash guard.
2. Install splash guard screw. Tighten.
   Torque: 3.9–5.1 N·m (35–45 **in-lbs**) *Splash guard screw*

Shock Clamp

1. Install shock clamp (7) and shock clamp screws (4,5).

NOTE
Loosely install shock clamp screws.

Rear Lighting Harness

1. See Figure 2. Route rear lighting harness (3) into place.
2. Install anchor cable straps (1).
3. See Figure 1. From the wheel side of the rear fork, install rear lighting harness caddy screws (1). Tighten.
   Torque: 12.2–14.9 N·m (9–11 ft-lbs) *Rear lighting harness caddy screw*
4. Install anchor cable straps (2).

Rear Fork Bearings

1. See Figure 3. Install **new** retaining rings (3) onto grooves on **new** bearings (2) if removed.
2. Position left bearing squarely on left bearing bore (4).
3. Press left bearing into fork bearing bore until retaining ring bottoms out.
4. Position right bearing squarely on right bearing bore.

5. See **Figure 5**. Press right bearing (1) into fork bearing bore until flush or within spec with counter bore (2).
Length/Dimension/Distance: 0–0.63 mm (0.00–0.02 in)

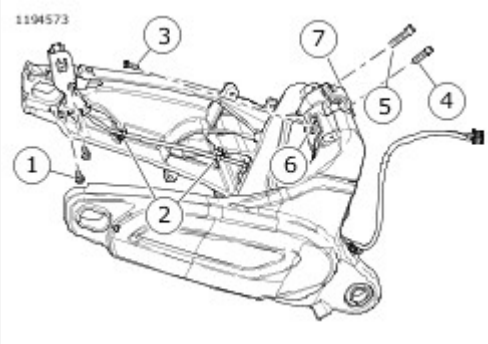

View interactive image

1	Rear lighting harness caddy screw (2)
2	Anchor cable strap
3	Splash guard screw
4	Small shock clamp screw
5	Large shock clamp screw
6	Splash guard
7	Shock clamp

Figure 1. Wheel Side of Rear Fork

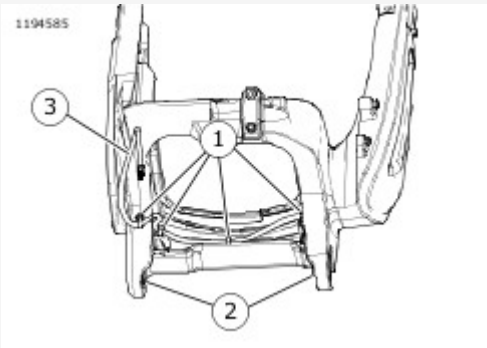

View interactive image

1	Anchor cable strap
2	Rear fork bearings (2)
3	Rear lighting harness

Figure 2. Bearing Side of Rear Fork

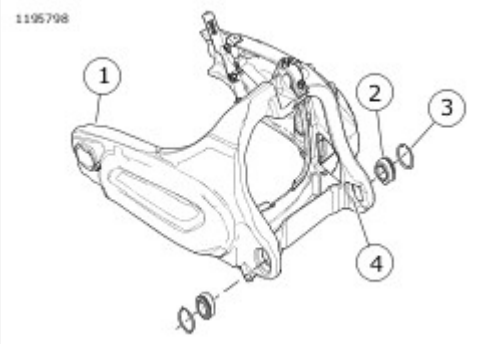

View interactive image

1	Rear fork
2	Bearing (2)
3	Retainer ring (2)
4	Bearing bore (2)

Figure 3. Rear Fork Bearings - FXDRS

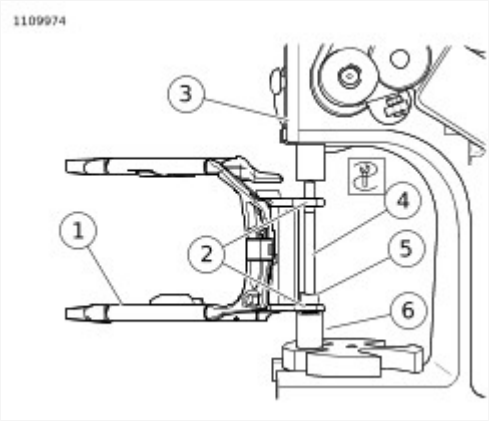

View interactive image

1	Rear fork
2	Bearing boss
3	Press
4	Handle
5	Pilot
6	Receiver cup

Figure 4. Removing Rear Fork Bearings (Typical)

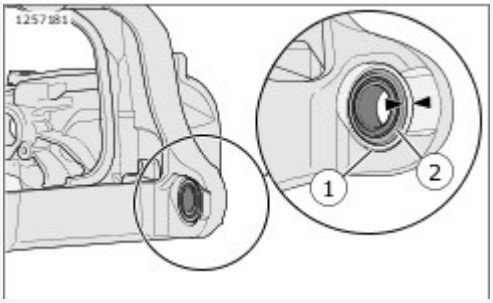

View interactive image

1	Right bearing
2	Counter bore

Figure 5. Rear Fork Bearing - FXDRS

1. Install lower shock screw. See **Chassis → REAR SHOCK ABSORBER**
2. **FXDRS:** Install rear **WSS** (Wheel speed sensor) [168]. See **Electrical → REAR WHEEL SPEED SENSOR (WSS)**
3. **All except FXDRS:** Install drive belt. See **Drive and Transmission → DRIVE BELT**
4. **FXDRS:** Install mud guard. See **Chassis → MUD GUARD**
5. Install rear wheel. See **Chassis → REAR WHEEL**
6. **FXDRS:** Install rear lighting bracket. See **Chassis → REAR LIGHTING BRACKET**
7. **FXDRS:** Install inner fender. See Disassemble and Assemble; Tail section in **Chassis → REAR FENDER**
8. Install belt guards. See **Chassis → BELT GUARDS**
9. **All except FXDRS:** Install brake line P-clip into rear fork. See **Chassis → BRAKE LINES**
10. **FXDRS:** Install exhaust system. See **Fuel and Exhaust → EXHAUST SYSTEM**
11. **All except FXDRS:** Install mufflers and exhaust bracket. See **Fuel and Exhaust → EXHAUST SYSTEM**
12. Install saddlebags, if equipped. See **Chassis → SADDLEBAGS**
13. **FXDRS:** Install seat. See **Chassis → SEAT**
    a. Connect rear lighting connectors.
14. Install negative battery cable. See **Electrical → POWER DISCONNECT**

1. Remove main fuse. See **Electrical → POWER DISCONNECT**.
2. Remove saddlebag, if equipped. See **Chassis → SADDLEBAGS**.

Consumables

Description	Part Number	Size
LOCTITE 243 MEDIUM STRENGTH THREADLOCKER AND SEALANT (BLUE)	99642-97	6 ml (¼ fl oz)

REMOVE

1. See Figure 1. Remove upper guard.
   a. Remove screw (5) and nut.
   b. Remove screw (4).
   c. Remove upper guard (6).
2. Remove lower guard.
   a. Remove screw (1) and docking bracket (2) if equipped.
   b. Remove screws (3).
   c. Remove lower belt guard (7) through opening in rear fork.

INSTALL

1. See Figure 1. Install lower belt guard.
   a. Guide lower guard (7) through rear fork.
   b. Place lower guard in position.
   c. Apply threadlock to screw (3).
      LOCTITE 243 MEDIUM STRENGTH THREADLOCKER AND SEALANT (BLUE) (99642-97)
   d. Install screws. Tighten.
      Torque: 7.9–9 N·m (70–80 **in-lbs**) *Lower belt guard screw*
2. Install upper guard.
   a. Place upper guard (6) in position.
   b. Apply threadlock to screw (4).
      LOCTITE 243 MEDIUM STRENGTH THREADLOCKER AND SEALANT (BLUE) (99642-97)
   c. Install screw. Tighten.
      Torque: 7.9–9 N·m (70–80 **in-lbs**) *Upper belt guard screw*
   d. Apply threadlock to screw (5).
      LOCTITE 243 MEDIUM STRENGTH THREADLOCKER AND SEALANT (BLUE) (99642-97)
   e. Install screw and nut. Tighten.
      Torque: 7.9–9 N·m (70–80 **in-lbs**) *Upper belt guard screw*
3. Install docking bracket, if equipped.
   a. Apply threadlock to screw (1).
      LOCTITE 243 MEDIUM STRENGTH THREADLOCKER AND SEALANT (BLUE) (99642-97)
   b. Position docking bracket (2) on frame and install screw. Tighten.

Torque: 52–64 N·m (38–47 ft-lbs) *Saddle bag docking bracket screw*

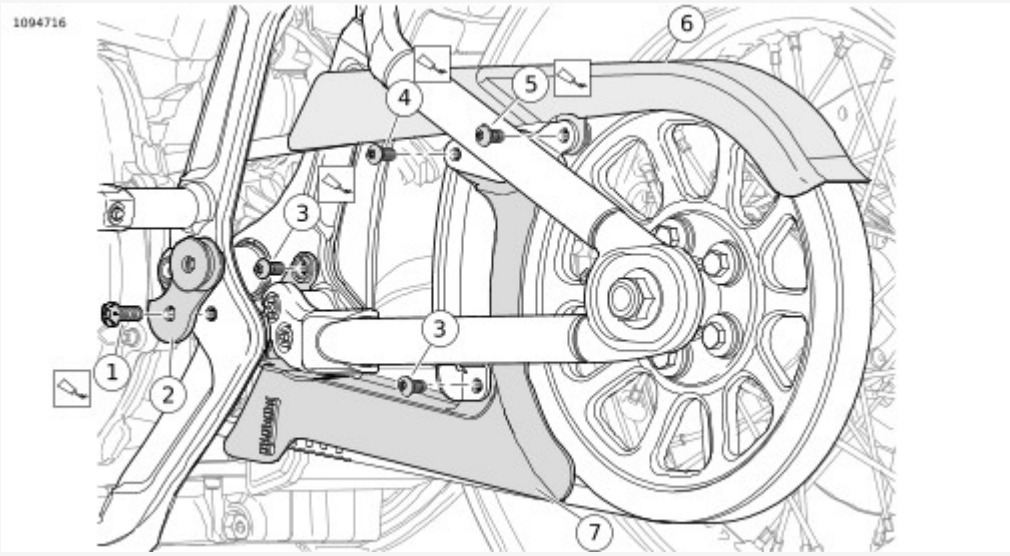

View interactive image

1	Screw
2	Docking bracket
3	Screw (2)
4	Screw
5	Screw
6	Upper guard
7	Lower guard

Figure 1. Belt Guards

REMOVE

1. See Figure 1. Remove lower guard.
   a. Remove screws (3).
   b. Remove lower guard (4).
2. Remove upper guard.
   a. loosen screw (5).
   b. Remove screws (1).
   c. Remove guard (2).

INSTALL

1. See Figure 1. Install upper guard.
   a. Slide guard (1) on grommet on rear lighting bracket.
   b. Secure screw (5). Tighten.
      Torque: 12.2–14.9 N·m (108–132 **in-lbs**) *Belt guard, upper, upper screw with grommet*
   c. Install screws (1). Tighten.
      Torque: 12.2–14.9 N·m (108–132 **in-lbs**) *Belt guard, upper, lower screws*
2. Install lower guard.
   a. Place lower guard (4) in position.
   b. Install screws (3). Tighten.
      Torque: 12.2–14.9 N·m (108–132 **in-lbs**) *Belt guard, lower, screws*

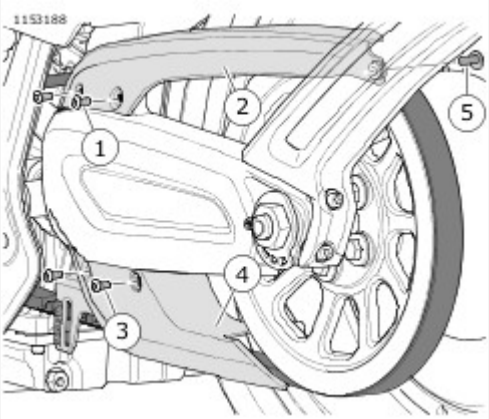

View interactive image

1	Screw (2)
2	Upper guard
3	Screw (2)
4	Lower guard

5	Screw

Figure 1. Belt Guards

1. Install saddlebag, if equipped. See**Chassis → SADDLEBAGS**.
2. Install main fuse. See **Electrical → POWER DISCONNECT**.

1. Disconnect negative battery cable. See **Electrical → POWER DISCONNECT**.
2. Remove seat. See **Chassis → SEAT**.
3. **FXDRS:**Remove inner fender. See **Chassis → REAR FENDER → Disassemble and Assemble: Tail Section**.
4. Remove fender, if necessary. See **Chassis → REAR FENDER**.
5. Remove frame crossmember. See **Chassis → FRAME CROSSMEMBER**.
6. Models with side mounted shock adjuster.
   a. Remove right side cover. See **Chassis → RIGHT SIDE COVER**.
   b. Remove battery strap. See **Maintenance → INSPECT BATTERY**.
7. Using a suitable lift, support frame and raise slightly to relieve pressure on the shock.

1. **Models with top-mounted shock adjuster:** See Chassis → REAR SHOCK ABSORBER → Install → Top Mounted Shock Adjuster. Remove cable strap (2).
2. **Models with side-mounted shock adjuster:** See Chassis → REAR SHOCK ABSORBER → Install → Side Mounted Shock Adjuster. Remove shock adjuster from bracket.
   a. Remove clip from ABS bracket (4).
   b. Remove screw (2) and washer (1).
   c. Set side mounted shock adjuster (3) to the side, being careful not to damage oil line.
3. Remove rear shock.
   a. **All except FXDRS:** See Chassis → REAR SHOCK ABSORBER → Install → Lower Shock Pinch Screw (All But FXDRS). Remove pinch bolt (1).
   b. **FXDRS:** See Chassis → REAR SHOCK ABSORBER → Install → Lower Shock Pinch Bracket (FXDRS). Remove large pinch bolt (3).
   c. See Chassis → REAR SHOCK ABSORBER → Install → Rear Shocks. Remove screw (6).
   d. Remove screw (5).
   e. Remove rear shock (1, 2 or 3).

Consumables

Description	Part Number	Size
LOCTITE 243 MEDIUM STRENGTH THREADLOCKER AND SEALANT (BLUE)	99642-97	6 ml (¼ fl oz)

NOTE

- Lower shock mount bushing and bearing are not serviceable.
- **FXDRS:** Flange of bushing is located on right side when installed.

1. See Figure 5. Install rear shock.
   a. Place rear shock (1, 2 or 3) in position.
   b. Install screw (5). Tighten.
      Torque: 94.9–101.68 N·m (70–75 ft-lbs) *Lower shock screw*
   c. Apply threadlocker to screw (6).
      LOCTITE 243 MEDIUM STRENGTH THREADLOCKER AND SEALANT (BLUE) (99642-97)
   d. Raise or lower rear fork to align upper shock mount.
   e. Install screw (6). Tighten.
      Torque: 108.4–122 N·m (80–90 ft-lbs) *Upper shock screw*
   f. See Figure 3 or Figure 4. Apply threadlocker to pinch screws.
      LOCTITE 243 MEDIUM STRENGTH THREADLOCKER AND SEALANT (BLUE) (99642-97)
   g. **All but FXDRS:** See Figure 3. Install pinch bolt (1). Tighten.
      Torque: 16.26–20.33 N·m (12–15 ft-lbs) *Shock pinch bolt, all but FXDRS*
   h. **FXDRS:** See Figure 4. Install Pinch bolt (3). Check small pinch bolt (1) torque. Tighten large pinch bolt.
      Torque: 12.2–14.9 N·m (108–132 **in-lbs**) *Shock pinch bolt, small, FXDRS*
      Torque: 16.26–20.33 N·m (12–15 ft-lbs) *Shock pinch bolt, large, FXDRS*
2. **Models with side-mounted shock adjuster:** See Figure 2. Install shock adjuster on bracket.
   a. Route side mounted shock adjuster (3) in front of the battery tray.
   b. Position side mounted shock adjuster on mounting bracket.
   c. Install washer (1) and screw (2). Tighten.
      Torque: 6.1–8.27 N·m (54–73 **in-lbs**) *Side-mounted shock adjuster screw*
   d. Insert shock adjuster hose clip onto ABS bracket (4).
3. **Models with top-mounted shock adjuster** See Figure 1. Install cable strap (2).

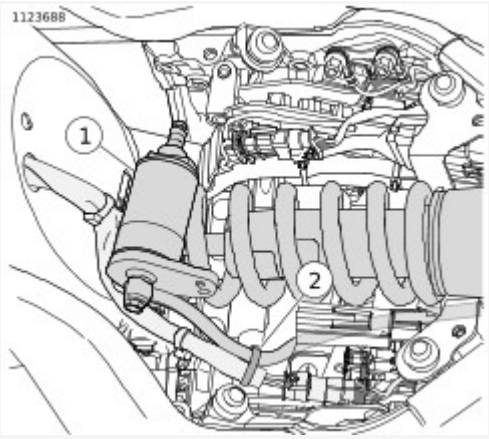

View interactive image

1	Top mounted shock adjuster
2	Cable strap

Figure 1. Top Mounted Shock Adjuster

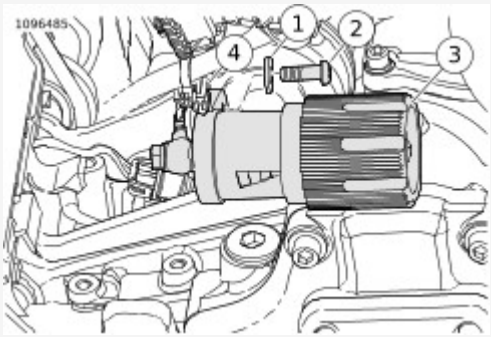

View interactive image

1	Washer
2	Screw
3	Side mounted shock adjuster
4	ABS bracket

Figure 2. Side Mounted Shock Adjuster

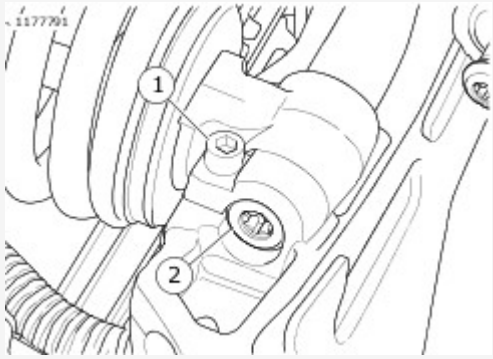

View interactive image

1	Pinch bolt
2	Lower shock screw

Figure 3. Lower Shock Pinch Screw (All But FXDRS)

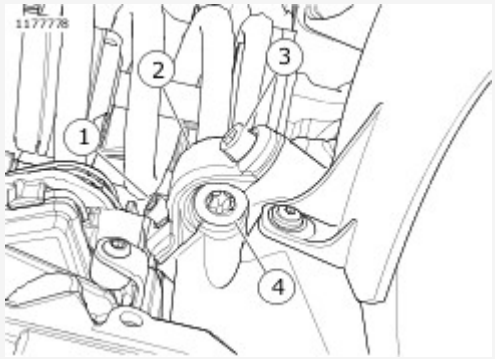

View interactive image

1	Small pinch bolt
2	Pinch bracket
3	Large pinch bolt
4	Lower mounting screw

Figure 4. Lower Shock Pinch Bracket (FXDRS)

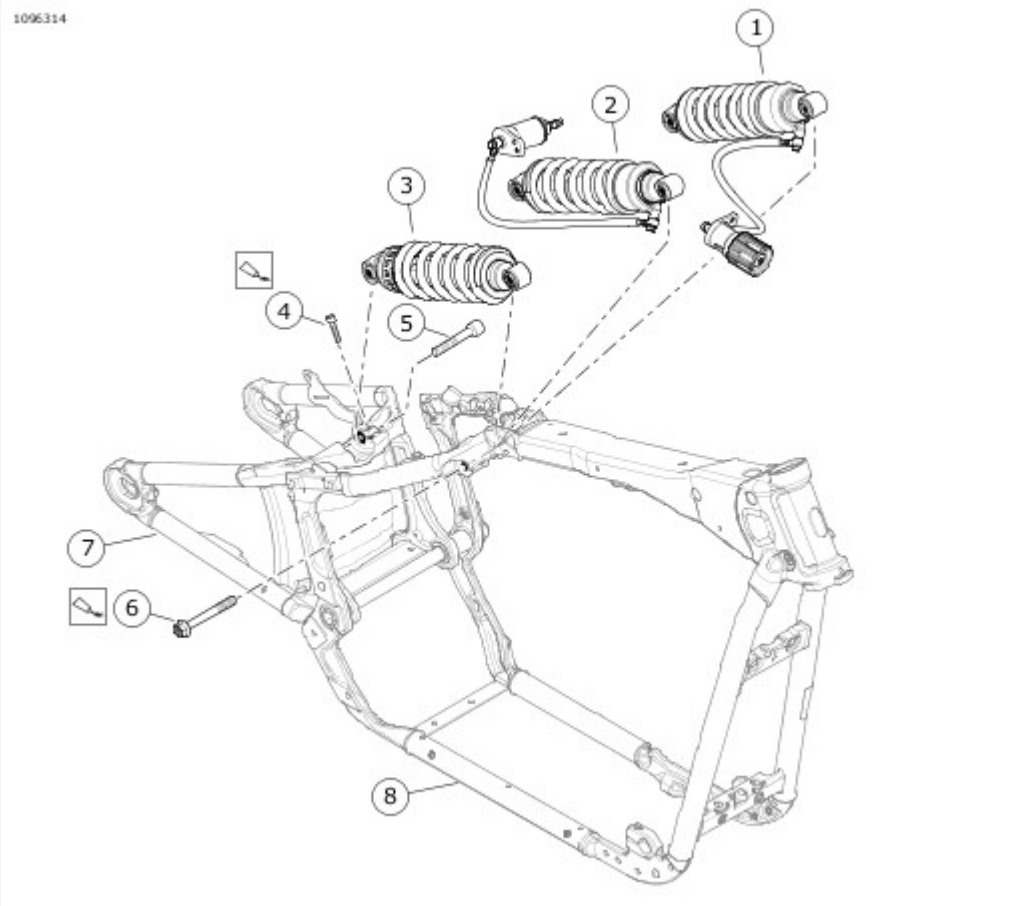

View interactive image

1	Shock, side mounted adjuster
2	Shock, top mounted adjuster
3	Shock, cam adjustable
4	Pinch bolt
5	Lower shock screw
6	Upper shock screw
7	Rear fork
8	Frame

Figure 5. Rear Shocks

Consumables

Description	Part Number	Size
ANTI-SEIZE LUBRICANT	98960-97	29.6 ml (1 fl oz)
LOCTITE 243 MEDIUM STRENGTH THREADLOCKER AND SEALANT (BLUE)	99642-97	6 ml (¼ fl oz)

The rear shock absorbers contain no serviceable parts except an adjustment knob and hardware kit.

Remove shock adjuster knob.

1. See **Chassis → REAR SHOCK ABSORBER → Disassemble and Assemble: Rear Shock Adjuster → Rear Shock Adjuster Knob**. Remove shock adjuster knob (1).
   a. Remove screw (3) and washer (2).
   b. Hold a rag wrapped around the adjuster housing and knob to prevent loss of the detent ball (4) and spring (5). Carefully remove the knob.
   c. Remove detent ball and spring.

Install shock adjuster knob.

1. Lubricate adjuster shaft.
   a. Apply a light coat of ANTI-SEIZE LUBRICANT to the knob adjuster shaft.
      ANTI-SEIZE LUBRICANT (98960-97)
   b. Rotate adjuster shaft, using a wrench, completely in both directions to distribute lubricant.
2. See **Chassis → REAR SHOCK ABSORBER → Disassemble and Assemble: Rear Shock Adjuster → Rear Shock Adjuster Knob**. Install shock adjuster knob.
   a. Apply threadlocker to screw (3).
      LOCTITE 243 MEDIUM STRENGTH THREADLOCKER AND SEALANT (BLUE) (99642-97)
   b. Install spring (5) and detent ball (4).
   c. Install adjuster knob (1).
   d. Install washer (2) and screw (3). Tighten.
      Torque: 3–5 N·m (26.6–44.3 **in-lbs**) *Rear shock adjuster knob screw*
   e. Rotate knob to verify that the detent is properly assembled. Clicks are heard every half rotation.

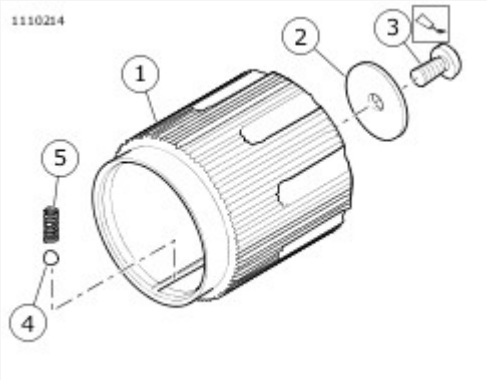

View interactive image

1	Knob
2	Washer
3	Screw
4	Detent ball
5	Spring

Figure 1. Rear Shock Adjuster Knob

1. Adjust shock absorber. See **Maintenance → ADJUST SUSPENSION**.
2. Connect negative battery cable. See**Electrical → POWER DISCONNECT**.
3. **Models with side-mounted shock adjuster.**
   a. Install battery strap. See **Maintenance → INSPECT BATTERY**.
   b. Install right side cover. See **Chassis → RIGHT SIDE COVER**.
4. Install frame crossmember. See **Chassis → FRAME CROSSMEMBER**.
5. **FXDRS:**Install inner fender. See **Chassis → REAR FENDER → Disassemble and Assemble: Tail Section**.
6. Install fender, if removed. See **Chassis → REAR FENDER**.
7. Install seat. See **Chassis → SEAT**.

1. Remove main fuse. See **Electrical → POWER DISCONNECT**.

Clutch Cable Disconnect

NOTE

The two cable halves should only be taken apart if replacing the upper clutch cable or housing. Otherwise disconnect at clutch lever and leave two halves assembled.

1. See Figure 1. Access two piece clutch cable.
   a. Remove spring clips (1).
   b. Slide cover (2) up.
2. See Figure 2. Identify upper clutch cable (1) and red lock button (2).
3.

   NOTE

   Inspect lock button (2). Replace if damaged.

   See Figure 3. Unlock upper clutch cable (1).
   a. Push lock button tabs (2) slightly inboard and then down to disengage.
4. Fully collapse cable (spring compressed) and push button in.
5. See Figure 4. Lift locking tab (1) from swaged ball end (2).
6. See Figure 5. Push swaged ball end (2) out from coupler from opposite side and slightly pull clutch lever in until locking tab is at top of window. Remove swaged ball end from coupler (1).
7. See Figure 6. Pry flex fingers (3) open and slide lower clutch cable (2) from housing (1).

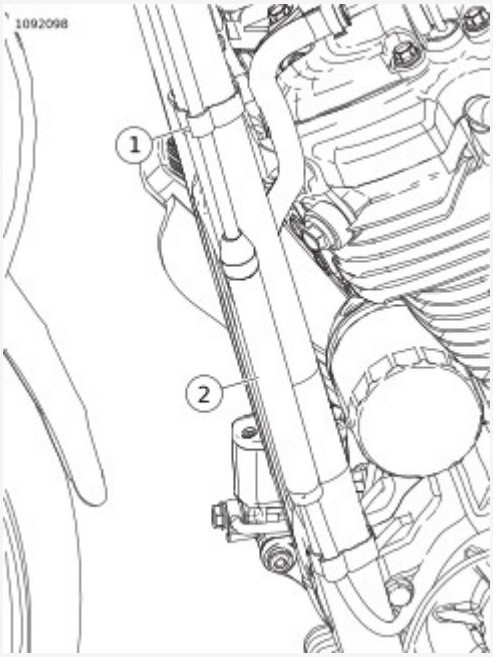

View interactive image

1	Clip
2	Cover

Figure 1. Clutch Cover and Clip

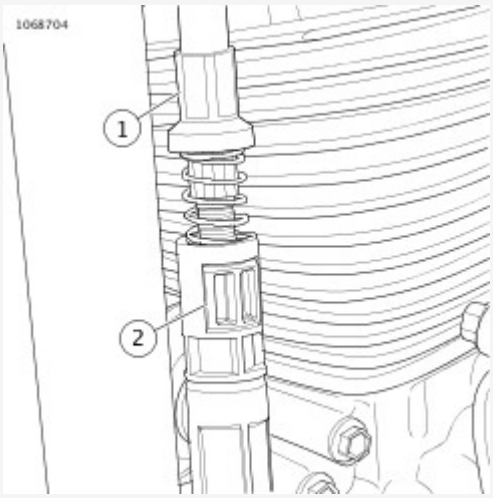

View interactive image

1	Upper clutch cable
2	Lock button

Figure 2. Lock Button

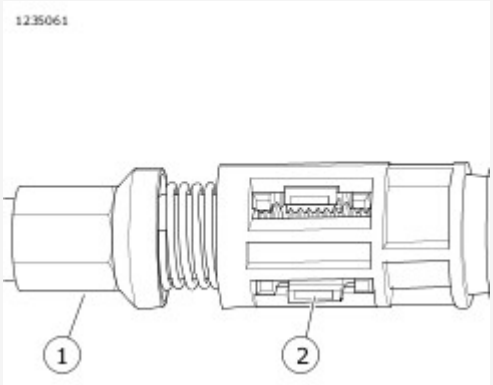

View interactive image

1	Upper clutch cable
2	Lock button

Figure 3. Compressed Upper Clutch Cable

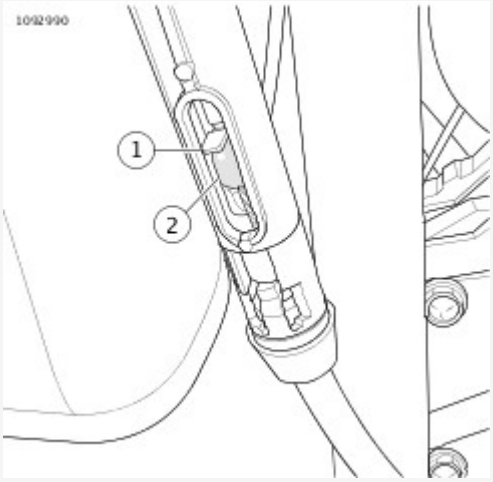

View interactive image

1	Locking tab (2)
2	Swaged ball end

Figure 4. Retaining Clips

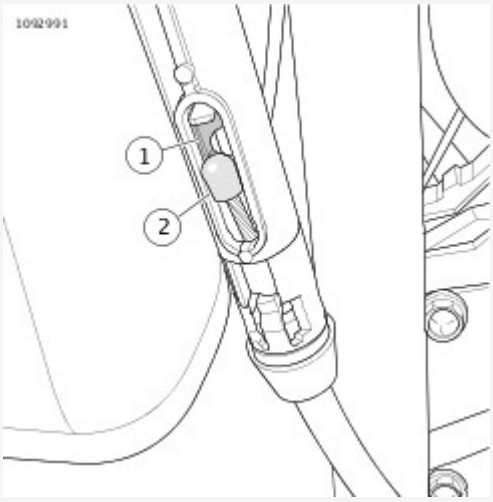

View interactive image

1	Coupler
2	Swaged ball end

Figure 5. Coupler Disengagement

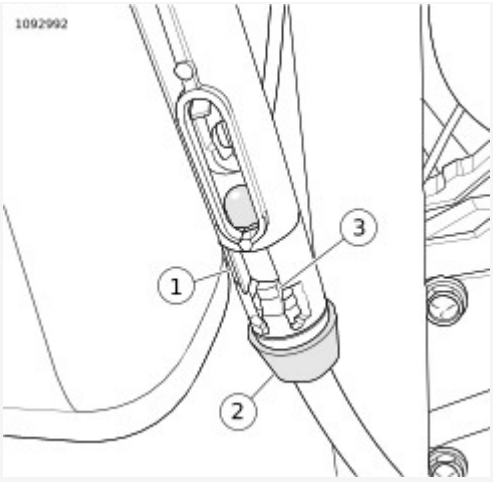

View interactive image

1	Housing
2	Lower clutch cable
3	Flex fingers

Figure 6. Lower Clutch Cable

Clutch Cable: Lower End

1. Remove clutch cable.
   a. Disconnect clutch cable at release cover. See **Drive and Transmission → CLUTCH RELEASE COVER**.
   b. Disconnect clutch cable. See Clutch Cable Disconnect in this section.

Clutch Cable: Upper End

1. See **Figure 7**. Remove clutch cable.
   a. Remove retaining ring (7).
   b. Remove pivot pin (3).
   c. Remove clutch hand lever (6).
   d. Remove pin (5).
   e. Remove clutch cable (8).
   f. Disconnect clutch cable. See Clutch Cable Disconnect in this section.

Clutch Hand Control

1. See **Figure 7**. Remove clutch hand control assembly.
   a. Remove screws (1) and washers (2).

b. Remove lever bracket clamp (9).

c. Remove hand lever bracket (4).

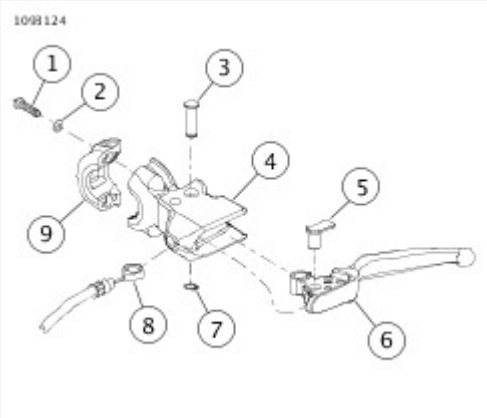

View interactive image

1	Screw (2)
2	Washer (2)
3	Pivot pin
4	Hand lever bracket
5	Pin
6	Clutch hand lever
7	Retaining ring
8	Clutch cable
9	Lever bracket clamp

Figure 7. Clutch Assembly

1. Inspect clutch lever and cable for wear or damage. Replace or repair as necessary.
2. Inspect clutch cable. Replace as necessary.

NOTICE

The clutch control cable must be oiled and adjusted periodically to compensate for lining wear. See MAINTENANCE SCHEDULING in this manual. Failure to oil and adjust the clutch control cable can result in equipment damage. (00203b)

3. Lubricate clutch cable and hand lever pivot pin hole with HARLEY LUBE.

Clutch Cable: Lower End

1. Install clutch cable.
   a. Connect clutch cable at release cover. See Drive and Transmission → CLUTCH RELEASE COVER.
   b. Connect clutch cable. See Clutch Cable Disconnect in this section.

Clutch Cable: Upper End

1. See Chassis → CLUTCH CONTROL → Remove → Clutch Assembly. Install clutch cable.
   a. Install clutch cable (8).
   b. Install pin (5).
   c. Install clutch hand lever (6).
   d. Install pivot pin (3)
   e. Install retaining ring (7).
   f. Connect clutch cable. See Clutch Cable Disconnect in this section.

Clutch Cable Connect

1. See Chassis → CLUTCH CONTROL → Remove → Lower Clutch Cable. Install lower clutch cable (2) into housing (1).
2. See Chassis → CLUTCH CONTROL → Remove → Coupler Disengagement. Pull clutch cable swaged ball end (2) out slightly from window and then manipulate clutch lever to align coupler (1) with swagged ball end and then release.
3. See Chassis → CLUTCH CONTROL → Remove → Retaining Clips. Secure locking tab (1) swaged ball end (2).

   NOTE

   Replace upper clutch cable if locking tab is damaged or missing.

4. See Chassis → CLUTCH CONTROL → Remove → Clutch Assembly. Ensure clutch lever (6) is in full open position and that ferrule is correctly seated in housing.
5.

   NOTE

   Inspect lock button (2). Replace if damaged.

   See Chassis → CLUTCH CONTROL → Remove → Compressed Upper Clutch Cable. Disengage lock button (2) allowing upper clutch cable spring to set free-play at clutch lever.

6. See **Chassis → CLUTCH CONTROL → Remove → Lock Button**. Push in lock button (2).
7. Check clutch operation.
8. See **Chassis → CLUTCH CONTROL → Remove → Clutch Cover and Clip**. Slide cover (2) down and install spring clips (1).

Clutch Hand Control

1. See **Chassis → CLUTCH CONTROL → Remove → Clutch Assembly**. Install clutch hand control assembly.
   a. Install hand lever bracket (4).
   b. Install lever bracket clamp (9).
   c. Install washers (2) and screws (1). Tighten.
      Torque: 6.8–9 N·m (60–80 **in-lbs**) *Clutch cable lever screw*

Lock Button

1. See Chassis → CLUTCH CONTROL → Assemble → Clutch Cover and Clip. Access two piece clutch cable.
   a. Remove spring clips (1).
   b. Slide cover (2) up.
2.

NOTE
Upper clutch cable (1) spring must be **uncompressed**.

   See Chassis → CLUTCH CONTROL → Assemble → Upper Clutch Cable Compressed. Unlock upper clutch cable (1).
   a. Push lock button tabs (2) slightly inboard and then down to disengage.
3. Remove lock button.

Housing

1. Disconnect clutch cable. See Clutch Cable Disconnect in the this section.
2. See Chassis → CLUTCH CONTROL → Assemble → Upper Clutch Cable Compressed. Remove housing (4) from upper housing (3).

Lock Button

1. **NOTE**

   Upper clutch cable (1) spring must be **uncompressed**.

   See Figure 2. Install lock button (2).
2. See Figure 1. Slide cover down (2) and install spring clips (1).

Housing

1. See Figure 3. Align coupler guide (2) with the guide in housing.
2. See Figure 2. Install housing (4) to upper housing (3).
3. Connect clutch cable. See Clutch Cable Disconnect in the this section.

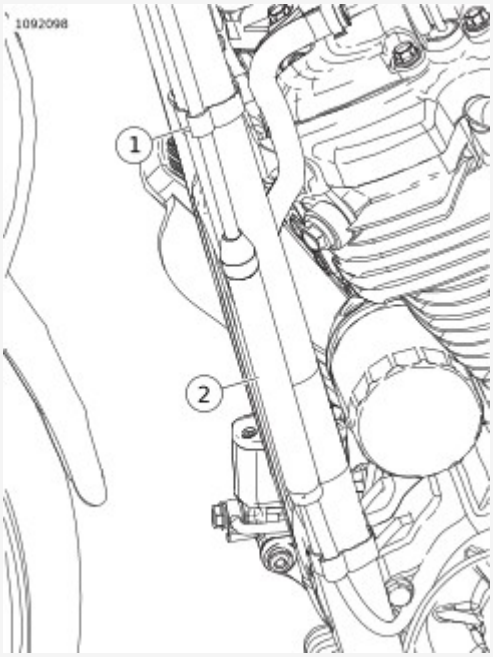

View interactive image

1	Clip
2	Cover

Figure 1. Clutch Cover and Clip

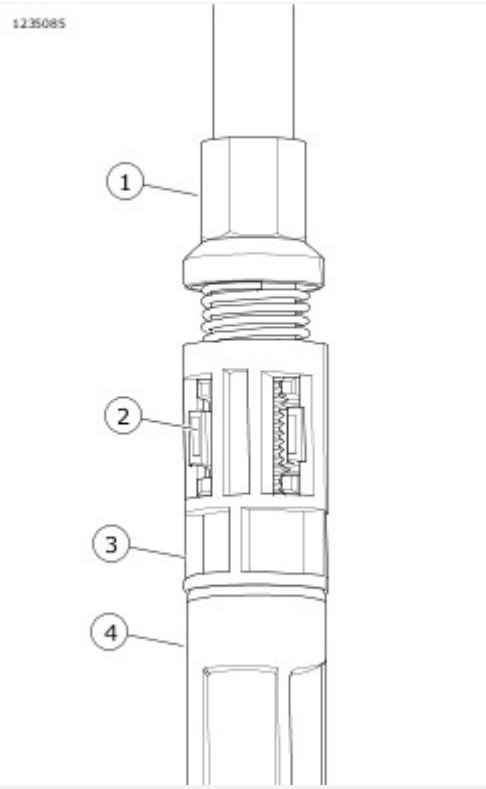

View interactive image

1	Upper clutch cable
2	Lock button
3	Upper housing
4	Housing

Figure 2. Upper Clutch Cable Compressed

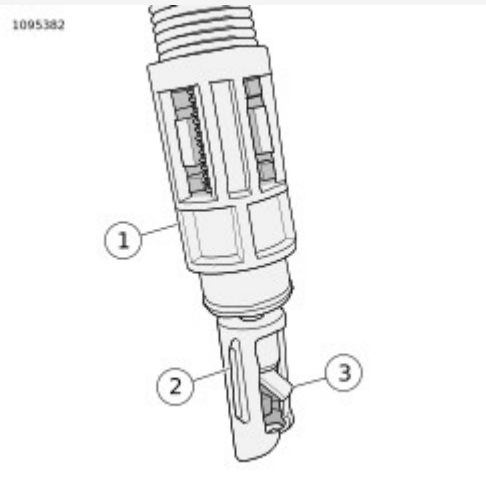

View interactive image

1	Upper housing

2	Coupler guide
3	Locking tab

Figure 3. Upper Housing

1. Install main fuse. See **Electrical → POWER DISCONNECT**.

PREPARE

1. Remove main fuse. See **Electrical → POWER DISCONNECT**.
2. **FLDE and FLHC/S:** Remove headlamp. See **Electrical → HEADLAMP**.

HORIZONTAL

1. See Electrical → HEADLAMP.

STANDARD ROUND

1. See Chassis → HEADLAMP NACELLE → Install → Standard Round Nacelle and Chassis → HEADLAMP NACELLE → Install → Standard Round Rear View.
   Remove screws (1) and clamps (2).
2. See Chassis → HEADLAMP NACELLE → Install → Standard Round Nacelle. Remove screws (3).
3. Remove trim cover (4).
4. Remove left and right cover (5 and 6).
5. Remove nacelle (7).

NACELLE MOUNTED

1. See Chassis → HEADLAMP NACELLE → Install → Nacelle Mounted. Remove screw (6).
2.

   NOTE

   Bezel is under pressure from isolators (7), disassemble slowly.

   Remove bezel (5).
3. Remove screws (8) and washers (9).
4. Remove screws (3).
5. Remove left and right cover (2 and 1).
6. Remove nacelle (4).

Consumables

Description	Part Number	Size
LOCTITE 243 MEDIUM STRENGTH THREADLOCKER AND SEALANT (BLUE)	99642-97	6 ml (¼ fl oz)

HORIZONTAL

1. See [Electrical → HEADLAMP].

STANDARD ROUND

1. Inspect upper and lower pads. Replace as needed.
2. See [Figure 1]. Install nacelle (7), right cover (6) and trim strip (2).
3. Apply threadlocker and install screws (3). Tighten.
   Torque: 9.4–12.2 N·m (83–108 **in-lbs**) *Headlamp nacelle trim strip screw*
   [LOCTITE 243 MEDIUM STRENGTH THREADLOCKER AND SEALANT (BLUE) (99642-97)]
4. Install left cover (5) and trim strip (4).
5. Install screws (3). Tighten.
   Torque: 9.4–12.2 N·m (83–108 **in-lbs**) *Headlamp nacelle trim strip screw*
6. See [Figure 1] and [Figure 2]. Install clamps (2) and screws (1). Tighten.
   Torque: 4.06–5.42 N·m (36–48 **in-lbs**) *Headlamp nacelle clamp screw*

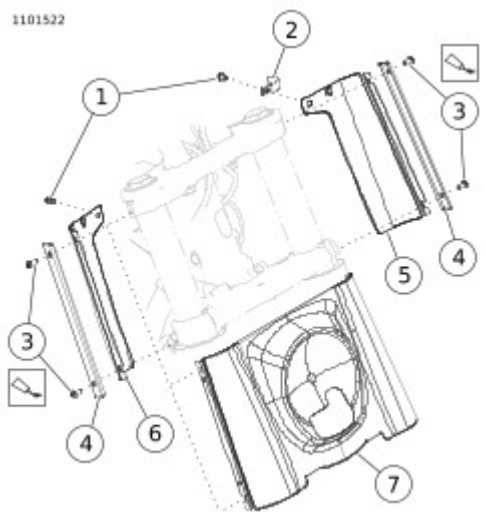

View interactive image

1	Screw (2)
2	Clamp
3	Screw (4)
4	Trim strip (2)
5	Left cover
6	Right cover
7	Nacelle

Figure 1. Standard Round Nacelle

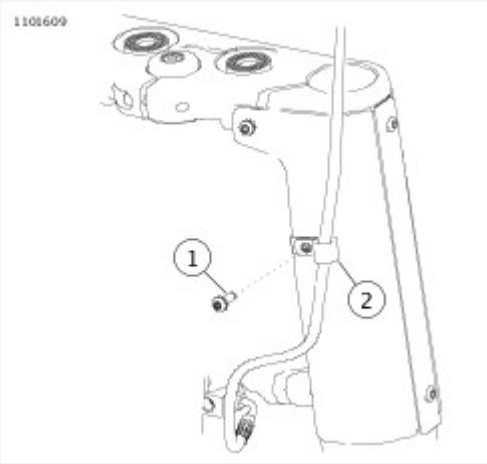

View interactive image

1	Screw
2	Clamp

Figure 2. Standard Round Rear View

NACELLE MOUNTED

1. See **Figure 3**. Inspect trim strip (10). Replace if necessary.
   See **Chassis → MEDALLIONS, BADGES, TANK EMBLEMS AND ADHESIVE STRIPS**.
2. Install nacelle (4) and right cover (1).
3. Apply threadlocker and install screws (3). Tighten.
   Torque: 9.4–12.2 N·m (7–9 ft-lbs) *Headlamp nacelle cover screw*
   LOCTITE 243 MEDIUM STRENGTH THREADLOCKER AND SEALANT (BLUE) (99642-97)
4. Install left cover (2).
5. Install screws (3). Tighten.

Torque: 9.4–12.2 N·m (7–9 ft-lbs) *Headlamp nacelle cover screw*

6. Install washers (9) and screws (8). Tighten.
   Torque: 9.6–11.7 N·m (85–104 **in-lbs**) *Headlamp nacelle screw*
7. Install bezel (5). Insert gasket behind lip of bezel.
8. Install screw (6). Tighten.
   Torque: 2.8–3.6 N·m (25–32 **in-lbs**) *Headlamp, nacelle mounted, bezel screw*

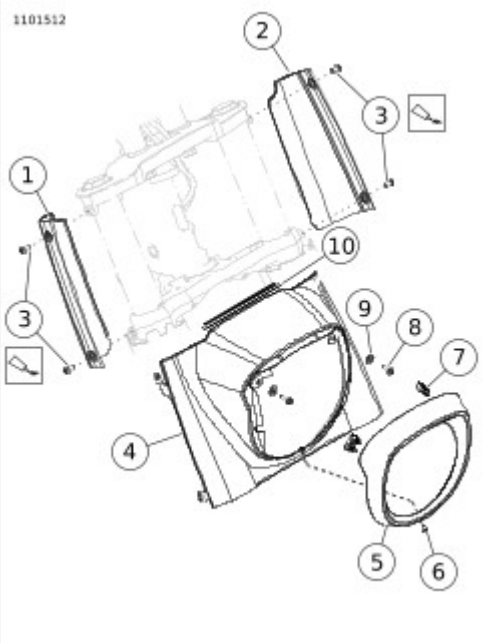

View interactive image

1	Right cover
2	Left cover
3	Screw (4)
4	Nacelle
5	Bezel
6	Screw
7	Isolator (2)
8	Screw (2)
9	Washer (2)
10	Trim strip

Figure 3. Nacelle Mounted

COMPLETE

1. **FLDE and FLHC/S:** Install headlamp. See **Electrical → HEADLAMP**.
2. Install main fuse. See **Electrical → POWER DISCONNECT**.

Removal

1. See Figure 1. Remove fairing.
   a. Open clamps (4).
   b. Lift fairing (3) up over headlamp.

Installation

1. See Figure 2. Install fairing.
   a. Open clamps (4).
   b. Place fairing over headlamp and onto front forks (5).
   c. Verify there are no cables or wires pinched.
   d. See Figure 1. Position upper bumper (2) on upper fork bracket (1).
   e. Verify lower bumper (5) is seated on lower fork bracket (6).
   f. Lock clamps.
   g. Verify the upper bumpers and lower bumpers are properly seated and fairing is secure.

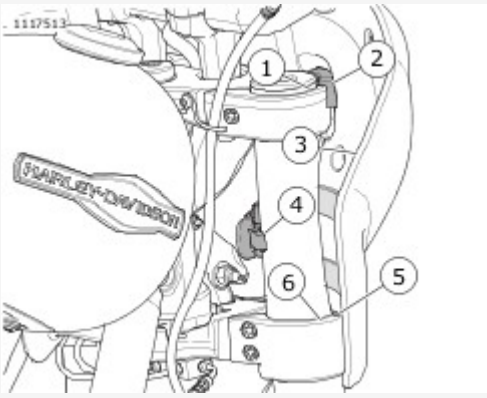

View interactive image

1	Upper fork bracket
2	Upper bumper
3	Fairing
4	Clamp
5	Lower bumper
6	Lower fork bracket

Figure 1. Fairing Installed

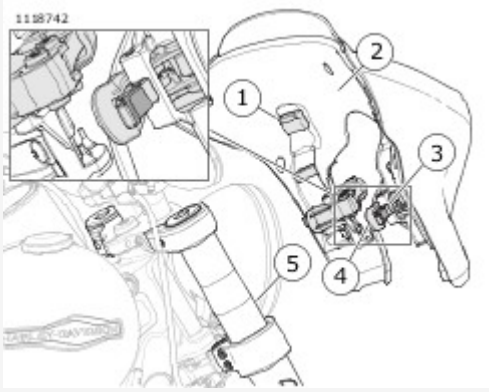

View interactive image

1	Inner fairing bumper (8)
2	Inner fairing
3	Clamp bumper (2)
4	Clamp (2)
5	Front fork (2)

Figure 2. Fairing Clamps

Remove

1. See Figure 1. Pull fairing (1) forward to remove.
2. Inspect grommets for excessive wear or damage, replace if necessary.

Install

1. See Figure 1. Install fairing (1).
   a. Align studs (2) to grommets (3).
   b. Press fairing firmly until seated.

View interactive image

1	Fairing
2	Stud (3)
3	Grommet (3)

Figure 1. Fairing

Disassemble

1. See Figure 2. Remove inner fairing.
   a. Remove fairing.
   b. Remove screws (7).
   c. Separate inner fairing (1) from outer fairing (3).
   d. Remove clips (2) if needed.
2. Remove clamps.
   a. Remove pins (4).
   b. Remove clamps (6).
3. See Figure 1. Remove windshield.
   a. Loosen screws (3).

NOTE
Do not remove screws.

   b. Lift windshield (2) from inner fairing (1).

Assemble

1. See Figure 1. Install windshield.
   a. Slide windshield (2) onto screws (3).
   b. Verify the windshield is properly seated. Tighten.
      Torque: 3.6–4.5 N·m (32–40 **in-lbs**) *Fairing windshield screw*
2. See Figure 2. Install clamps.
   a. Place clamps (6) in position on inner fairing (1).
   b. Install pins (4) through holes on inner fairing and through clamps until flush.
   c. Verify operation of clamps.
3. Install inner fairing.
   a. Place inner fairing (1) and outer fairing (3) together.
   b. Install screws (7).
   c. See Figure 3. Tighten screws in sequence shown.
      Torque: 3.6–4.5 N·m (32–40 **in-lbs**) *Fairing, inner screw*

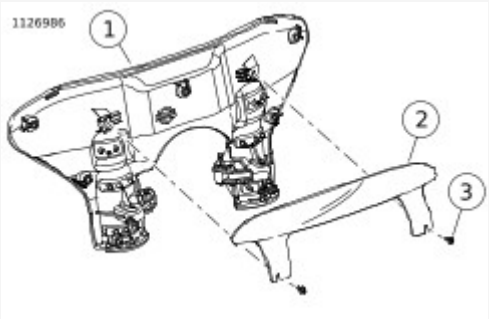

View interactive image

1	Inner fairing
2	Windshield
3	Screws (2)

Figure 1. Quick Disconnect Fairing Windshield

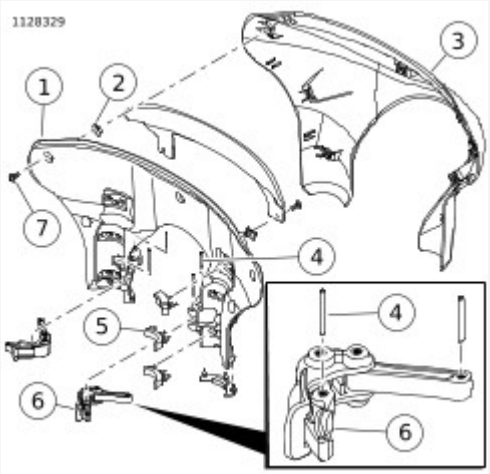

View interactive image

1	Inner fairing
2	Clip (7)
3	Outer fairing
4	Pin (4)
5	Bumper (8)
6	Clamp (2)
7	Screw (7)

Figure 2. Quick Disconnect Fairing

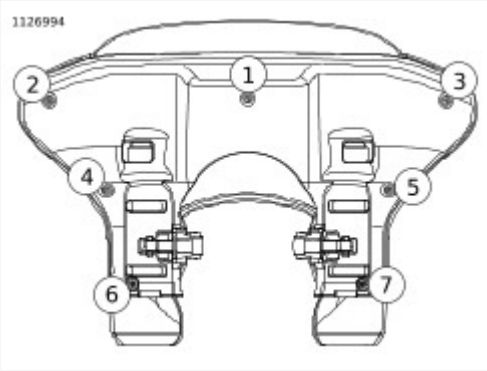

View interactive image

Figure 3. Torque Sequence

1. See **Chassis → WINDSHIELD → Install → Windshield**.
   Remove windshield.
   a. Grab windshield at either side of horizontal bracket (2).
   b. Pull windshield so that upper notches (1) separate from grommets.
   c. Raise windshield until lower notches (5) separate from grommets.
   d. Remove windshield.

1. See **Chassis → WINDSHIELD → Install → Windshield**. Install windshield.
   a. Place upper and lower notches (1,5) on upper and lower grommets.
   b. Push evenly on horizontal bracket (2) until notches are fully seated on grommets.

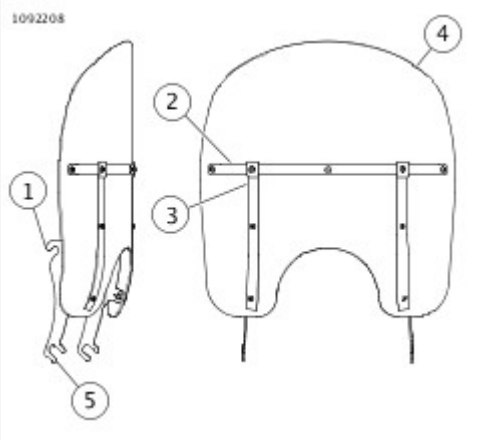

View interactive image

1	Upper notch (2)
2	Horizontal bracket
3	Vertical bracket
4	Windshield
5	Lower notch (2)

Figure 1. Windshield

1. See **Chassis → WINDSHIELD → Assemble → Windshield Assembly**. Disassemble windshield brackets.
   a. Place windshield on a clean padded surface.
   b. Remove acorn nuts (2) and discard screws (6, 7) from each vertical bracket (8).
   c. Remove and discard remaining screws from horizontal bracket (5).

1. See [Chassis → WINDSHIELD → Assemble → Windshield Assembly](). Install horizontal bracket.
   a. Position inner horizontal bracket (3) and outer horizontal bracket (5) on windshield (4).
   b. Loosely install three **new** short screws (6) and acorn nuts (2).
2. Install vertical bracket.
   a. Position mounting brackets (1) and vertical brackets (8) on windshield.
   b. Loosely install **new** long screws (7) and **new** short screws (6) through vertical brackets, windshield and mounting brackets.
   c. loosely install acorn nuts.
   d. Tighten all nuts.
      Torque: 2.6–3 N·m (23–27 **in-lbs**) *Windshield acorn nuts*

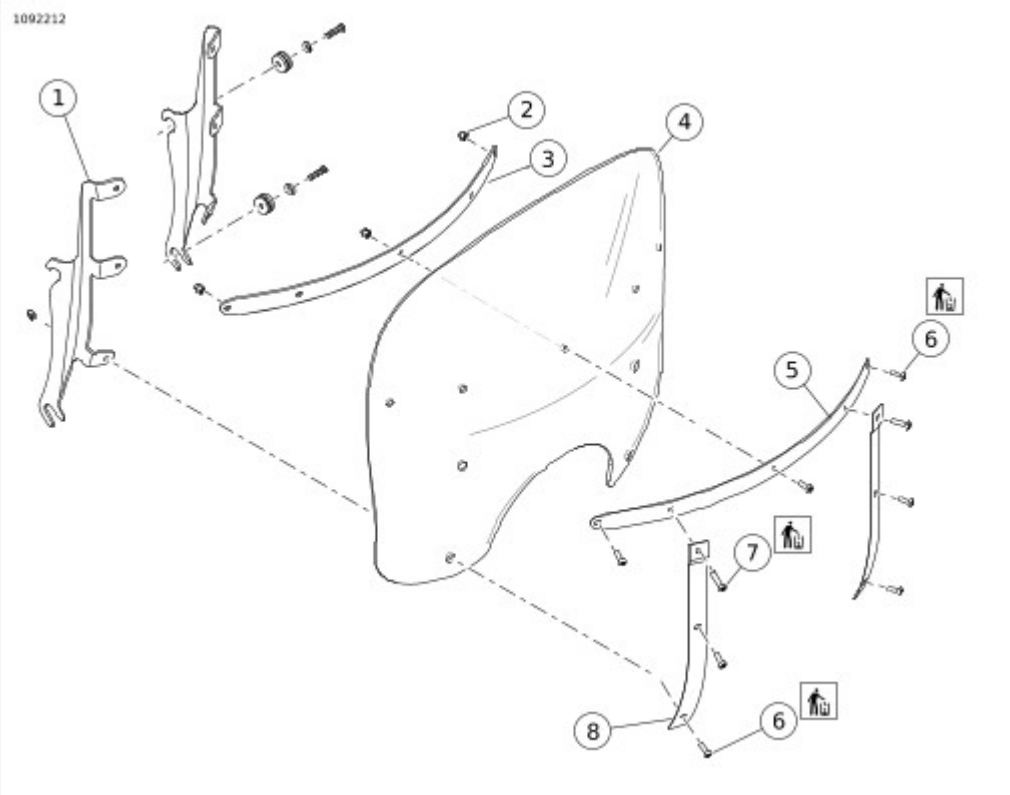

View interactive image

1	Mounting bracket (2)
2	Acorn nut (9)
3	Inner horizontal bracket
4	Windshield
5	Outer horizontal bracket
6	Short Screw (7)

7	Long screw (2)
8	Vertical bracket

Figure 1. Windshield Assembly

Left

1. Remove LHCM. See **Electrical → LEFT HAND CONTROL MODULE (LHCM)**.
2. Remove left hand grip.
   a. Cut hand grip open with a sharp knife.
   b. Peel hand grip open.
   c. Remove from handlebar.

Right

1. Remove RHCM. See **Electrical → RIGHT HAND CONTROL MODULE (RHCM)**.
2. Remove right hand grip.

Consumables

Description	Part Number	Size
HARLEY-DAVIDSON ADHESIVE (GRIPLOCK)	99839-95	29.6 ml (1 fl oz)
LOCTITE 770 PRISM PRIMER	Loctite 770	-

Left

1. Install left hand grip.

NOTE
Adhesive sets in 4 minutes and cures in 24 hours.

   a. Prepare the left grip end of the handlebar with emery cloth.
   b. Clean the left grip end of the handlebar with acetone.
   c. Apply primer to the inside of the **new** hand grip. **LOCTITE 770 PRISM PRIMER (Loctite 770)**
   d. Remove excess primer. Wait 2 minutes for the primer to set.
   e. Apply adhesive to the inside of the **new** hand grip. **HARLEY-DAVIDSON ADHESIVE (GRIPLOCK) (99839-95)**
   f. Install the **new** hand grip with a twisting motion, ending with cosmetic features properly positioned.
2. Install LHCM. See **Electrical → LEFT HAND CONTROL MODULE (LHCM)**.

Right

1. Install hand grip with cosmetic features properly positioned.
   a. Rotate to verify that internal splines are engaged with the twist grip sensor.
2. Install RHCM. See **Electrical → RIGHT HAND CONTROL MODULE (RHCM)**

1. Remove main fuse. See **Electrical → POWER DISCONNECT**.
2. Remove windshield, if equipped. See **Chassis → WINDSHIELD**.
3. Remove fairing, if equipped. See **Chassis → FAIRING**.
4. Remove front brake master cylinder. See **Chassis → FRONT BRAKE MASTER CYLINDER**.
5. Disconnect RHCM, TGS, and LHCM from front electrical caddy. See **Electrical → RIGHT HAND CONTROL MODULE (RHCM)**.
6. Remove clutch hand control from handlebar. See **Chassis → CLUTCH CONTROL**.

Remove

1. Remove handlebar assembly. See Figure 1.
   a. Remove flange nuts (11) and lower cup washers (10).
   b. **FXBB, FXBR, FXBRS** Disconnect IM. See Electrical → INSTRUMENT MODULE (IM).
   c. Remove handlebar (1) and attached components as an assembly.

Install

1. Install handlebar assembly. See Figure 1.
   a. Place upper cup washers (6) on top of bushings (7).
   b. Install studs (5) through upper cup washers (6), bushings (7), spacers (8), and upper fork bracket (9).
   c. Install lower cup washers (10) and flange nuts (11). Tighten flange nuts.
      Torque: 40.7–54.3 N·m (30–40 ft-lbs) *Riser flange nuts*
   d. **FXBB, FXBR, FXBRS** Connect IM. See Electrical → INSTRUMENT MODULE (IM).

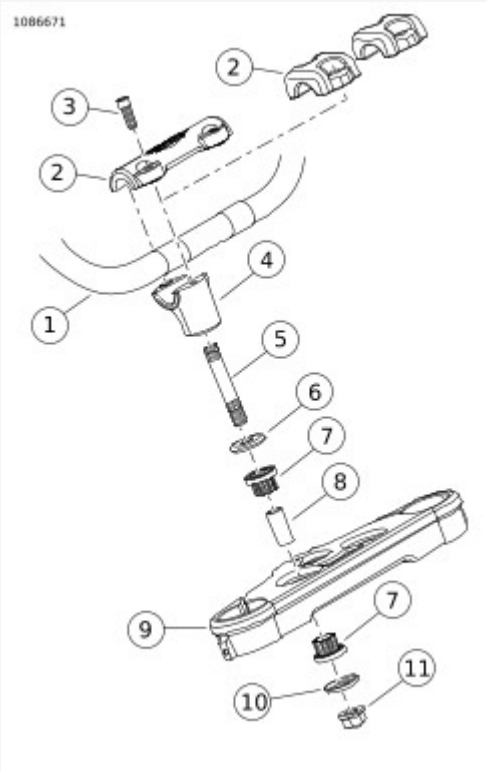

View interactive image

1	Handlebar
2	Handlebar clamp

3	Handlebar clamp fastener (4)
4	Riser (2)
5	Stud (2)
6	Upper cup washer (2)
7	Bushing (4)
8	Spacer (2)
9	Upper fork bracket (typical)
10	Lower cup washer (2)
11	Flange nut (2)

Figure 1. Handlebar Mounting (Typical)

Remove

1. See Figure 1. Remove handlebar.
   a. Remove screw (2).
   b. Remove handlebar (1).
   c. Remove gasket (3).

Install

1. See Figure 1. Install handlebar.
   a. Install gasket (3).
   b. Install handlebar (1).
   c. Align handlebar gap to fork clamp gap. Verify gap (4) meets or exceeds minimum specification.
      Length/Dimension/Distance: 1.5 mm (0.06 in)
   d. Install screw (2). Tighten.
      Torque: 21.7–27.1 N·m (16–20 ft-lbs) *Riser pinch screw*

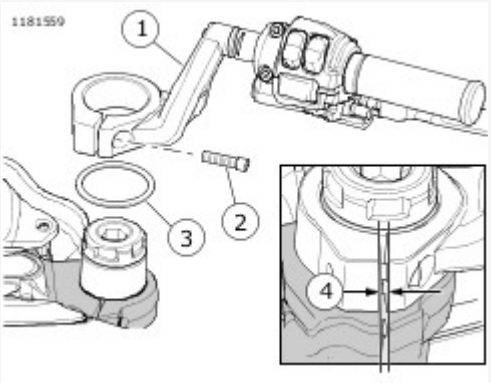

View interactive image

1	Handlebar
2	Screw
3	Gasket
4	Common gap

Figure 1. Handlebar: Clip-on

Disassemble

1. Remove RHCM. See Electrical → RIGHT HAND CONTROL MODULE (RHCM).
2. Remove TGS. See Fuel and Exhaust → TWIST GRIP SENSOR (TGS).
3. Remove LHCM. See Electrical → LEFT HAND CONTROL MODULE (LHCM).
4. Remove left hand grip, if necessary. See Figure 1.
5. **FXBR, FXBRS, FXFB, FXFBS, FLFB, FLFBS, FLSB** Remove weight inside left handlebar, if necessary.
6. Disassemble handlebar assembly. See Figure 1.
   a. Remove handlebar clamp fasteners (3) to separate the handlebar (1), handlebar clamp (2), and risers (4).
   b. Remove studs (5) from riser, if necessary.
   c. Remove spacers (8) and bushings (7), if necessary.

Assemble

1. Assemble handlebar assembly. See Figure 1.
   a. Install bushings (7) and spacers (8), if removed.
   b. Thread the short end of studs (5) into risers (4) until bottomed, if removed.
   c. Install upper cup washer (6) on top of left and right bushings (7).
   d. Insert studs in bushings and install lower cup washer (10) and flange nut (11) loosely.
   e. Center handlebar (1) in risers.
   f. Place handlebars in normal riding position and hold.
   g. Attach handlebar clamp (2) with handlebar clamp fasteners (4).

      NOTE

      Tighten handlebar clamp fasteners just enough to maintain handlebar position.

   h. Tighten gap limiting fasteners.
      Torque: 16.3–21.7 N·m (12–16 ft-lbs) *Handlebar clamp gap limiting fasteners*

      NOTE

      Handlebar clamps are manufactured with pads on one half of the top clamp that should be touching the riser when assembled. The fasteners (gap limiting fasteners) closest to the pads need to be tightened first.

i. Tighten open gap fasteners. Verify that there is a gap between upper and lower clamps at front.
Torque: 16.3–21.7 N·m (12–16 ft-lbs) *Handlebar clamp open gap fasteners*

j. Tighten flange nuts (11).
Torque: 40.7–54.3 N·m (30–40 ft-lbs) *Riser flange nuts*

2. **FXBB, FXBR, FXBRS** Connect IM. See Electrical → INSTRUMENT MODULE (IM).
3. **FXBR, FXBRS, FXFB, FXFBS, FLFB, FLFBS, FLSB** Install weight inside left handlebar, if necessary.
4. Install left hand grip, if necessary. See Chassis → HAND GRIPS.
5. Install LHCM. See Electrical → LEFT HAND CONTROL MODULE (LHCM).
6. Install clutch control. See Chassis → CLUTCH CONTROL.
7. Install TGS. See Fuel and Exhaust → TWIST GRIP SENSOR (TGS).
8. Install RHCM. See Electrical → RIGHT HAND CONTROL MODULE (RHCM).

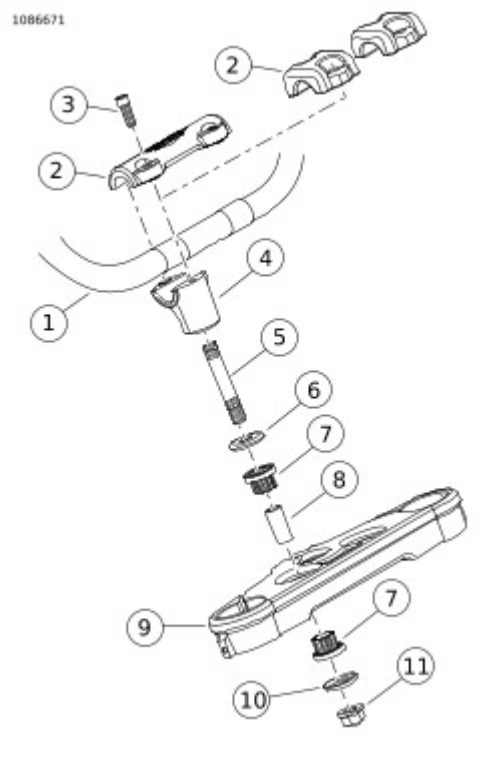

View interactive image

1	Handlebar
2	Handlebar clamp
3	Handlebar clamp fastener (4)
4	Riser (2)
5	Stud (2)

6	Upper cup washer (2)
7	Bushing (4)
8	Spacer (2)
9	Upper fork bracket (typical)
10	Lower cup washer (2)
11	Flange nut (2)

Figure 1. Handlebar Mounting (Typical)

Disassemble

1. Remove RHCM. See Electrical → RIGHT HAND CONTROL MODULE (RHCM).
2. Remove TGS. See Fuel and Exhaust → TWIST GRIP SENSOR (TGS).
3. Remove LHCM. See Electrical → LEFT HAND CONTROL MODULE (LHCM).
4. Remove left hand grip, if necessary. See Chassis → HAND GRIPS.
5. See Figure 1. Disassemble handlebar.
   a. Remove screw and washer (1, 2).
   b. Remove tube (4).

Assemble

1. See Figure 1. Assemble handlebar.
   a. Install tube (4).
   b. Install screw and washer (1, 2). Tighten.
      Torque: 24.4–29.8 N·m (18–22 ft-lbs) *Handlebar tube screw*
2. Install left hand grip, if removed. See Chassis → HAND GRIPS.
3. Install LHCM. See Electrical → LEFT HAND CONTROL MODULE (LHCM).
4. Install TGS. See Fuel and Exhaust → TWIST GRIP SENSOR (TGS).
5. Install RHCM. See Electrical → RIGHT HAND CONTROL MODULE (RHCM).

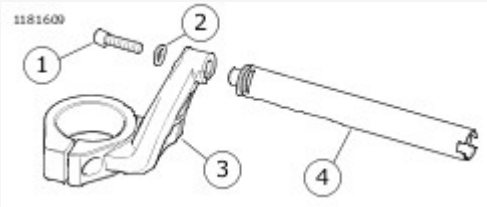

View interactive image

1	Screw
2	Washer
3	Riser
4	Tube

Figure 1. Handlebar Assembly

1. Connect clutch hand control to handlebar. See **Chassis → CLUTCH CONTROL**.
2. Connect RHCM, TGS, and LHCM to front electrical caddy. See **Electrical → RIGHT HAND CONTROL MODULE (RHCM)**.
3. Install front brake master cylinder. See **Chassis → FRONT BRAKE MASTER CYLINDER**.
4. Install fairing, if equipped. See **Chassis → FAIRING**.
5. Install windshield, if equipped. See **Chassis → WINDSHIELD**.
6. Install main fuse. See **Electrical → POWER DISCONNECT**.

Remove

1. See **Chassis → MIRRORS → Install → Mirror Mount (Typical)**. Support turn signal assembly (2), if equipped.
2. Remove nut (4) and washer (3).
3. Remove mirror (1).

Install

1. See **Chassis → MIRRORS → Install → Mirror Mount (Typical)**. Insert threaded stem of mirror into hole in clutch or brake lever bracket.
2. Install turn signal (2), if equipped.
3. Install washer (3) and nut (4).
4. Adjust mirror as necessary and tighten nut.
   Torque: 10.8–16.3 N·m (96–144 **in-lbs**) *Mirror mounting nut*

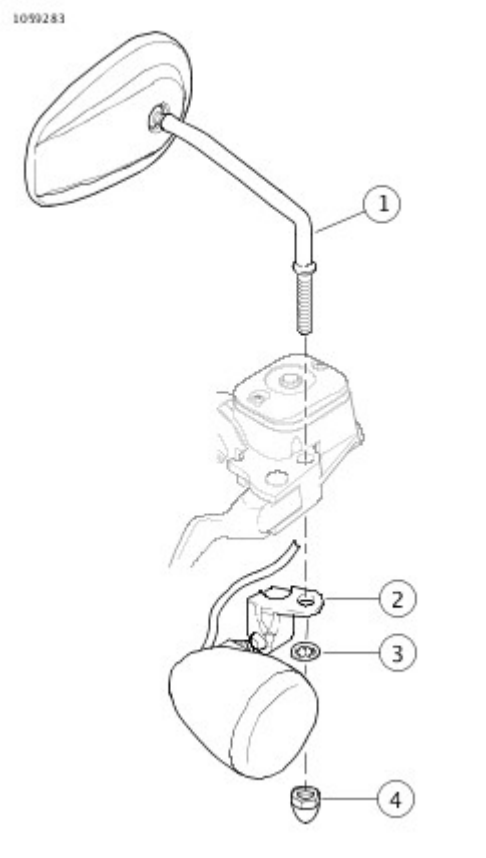

View interactive image

1	Mirror
2	Turn signal assembly, if equipped
3	Lock washer
4	Nut

Figure 1. Mirror Mount (Typical)

1. See **Chassis → FRONT FENDER → Install → Front Fenders**.
   Remove front fender.
   a. Remove screws (3,5,7) and nuts (8), depending on model.
   b. Remove fender (2,4,6), depending on model.
   c. **Inverted fork:** Fender (2) assembly, remove screws (1) and nuts (9). Separate from bracket (10).

Consumables

Description	Part Number	Size
LOCTITE 243 MEDIUM STRENGTH THREADLOCKER AND SEALANT (BLUE)	99642-97	6 ml (¼ fl oz)

Inverted Fork

1. See **Chassis → FRONT FENDER → Install → Front Fenders**. Install front fender.
   a. Align fender (2) with bracket (10).
   b. Apply threadlock to screws (1).
      LOCTITE 243 MEDIUM STRENGTH THREADLOCKER AND SEALANT (BLUE) (99642-97)
   c. Install screws and nuts (9). Tighten.
      Torque: 4.1–5.4 N·m (36–48 **in-lbs**) *Front fender to bracket screw, FXFB/FXFBS/FXDRS*
   d. Align fender assembly with mounting holes on front fork.
   e. Apply threadlock to screws (3).
      LOCTITE 243 MEDIUM STRENGTH THREADLOCKER AND SEALANT (BLUE) (99642-97)
   f. Install screws. Tighten.
      Torque: 8–10 N·m (71–89 **in-lbs**) *Front fender mounting screw, FXFB/FXFBS*

FXBB

1. See **Chassis → FRONT FENDER → Install → Front Fenders**. Install front fender.

   NOTE

   Verify that the mounting brackets are resting against the machined bosses of the forks before tightening.

   a. Align fender (6) mounting brackets to the machined bosses on the front forks.
   b. Apply threadlock to screws (7).
      LOCTITE 243 MEDIUM STRENGTH THREADLOCKER AND SEALANT (BLUE) (99642-97)
   c. Install Screws and nuts (8). Tighten.
      Torque: 22–28 N·m (16–21 ft-lbs) *Front fender mounting screw, FXBB*

Standard Fork (Typical)

1. See **Chassis → FRONT FENDER → Install → Front Fenders**. Install front fender.
   a. Align fender (4) to the mounting holes on fork.
   b. Apply threadlock to screws (5).
      LOCTITE 243 MEDIUM STRENGTH THREADLOCKER AND SEALANT (BLUE) (99642-97)
   c. Install Screws. Tighten.
      Torque: 22–28 N·m (16–21 ft-lbs) *Front fender mounting screw (typical)*

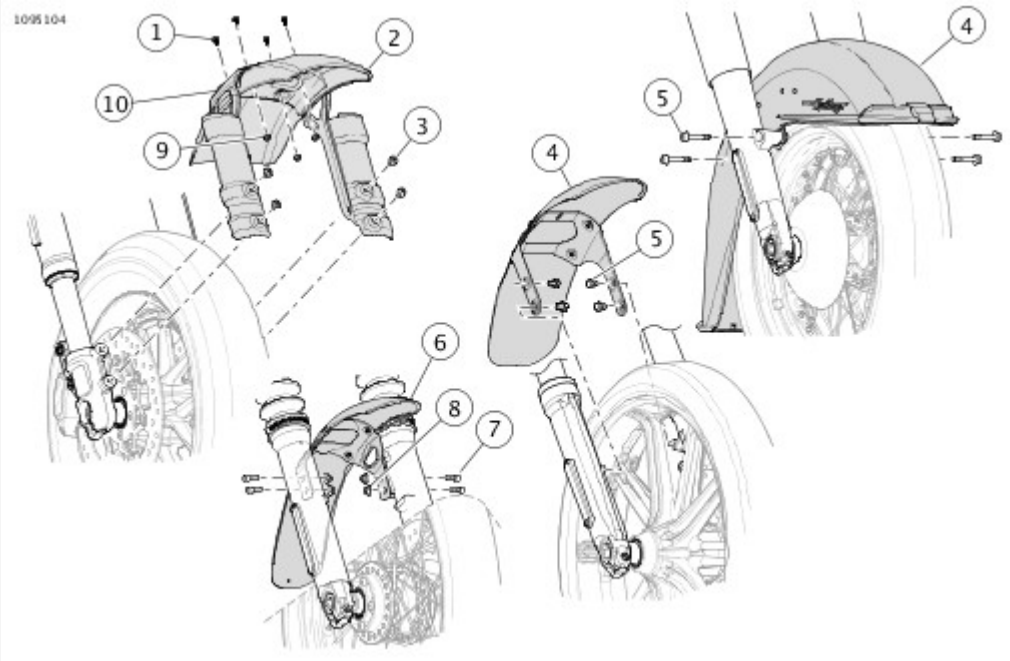

View interactive image

1	Screw (4)
2	Fender, FXFB/FXFBS/FXDRS
3	Screw (4)
4	Fender (typical)
5	Screw (4)
6	Fender, FXBB
7	Screw (4)
8	Nut (4)
9	Nut (4)
10	Bracket

Figure 1. Front Fenders

Full Fender

1. See Chassis → FRONT FENDER → Assemble → Front Fender Disassembly (Typical). Remove side trim.
   a. Remove nuts (5).
   b. Remove trim (6).
   c. Remove tee bolts (7) from trim.
2. Remove fender tip.
   a. Remove nuts (4).
   b. Remove tip (3).
3. Remove medallions (9). See Chassis → MEDALLIONS, BADGES, TANK EMBLEMS AND ADHESIVE STRIPS.
4. See Chassis → FRONT FENDER → Assemble → Front Fender Disassembly (Typical). Remove skirt trim.
   a. Remove nuts (8).
   b. Remove trim (1).

1. See **Figure 1**. Install skirt trim.
   a. Position skirt trim (1) on fender (2).
   b. Install nuts (8).
2. Install medallions.
   a. Clean mounting surface. See **Chassis → MEDALLIONS, BADGES, TANK EMBLEMS AND ADHESIVE STRIPS**.
   b. Remove adhesive backing from medallion (9).
   c. Install medallion pressing firmly to make sure there is good adhesion.
3. Install fender tip.
   a. Position fender tip (3) on fender (2).
   b. Install nuts (4).
4. Install side trim.
   a. Loosely install tee bolt (7) and nut (5) on fender.
   b. Slide side trim (6) on tee bolts.
   c. Hold side trim tight to fender tip (3) and tighten nuts.
      Torque: 1.1–1.6 N·m (10–14 **in-lbs**) *Front fender side trim nut*

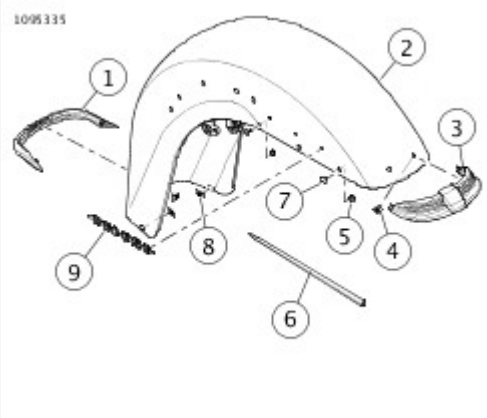

View interactive image

1	Skirt trim
2	Fender
3	Fender tip
4	Nut (3)
5	Nut (4)
6	Side trim (2)
7	Tee bolt (4)
8	Nut (3)
9	Medallion (2)

Figure 1. Front Fender Disassembly (Typical)

1. Remove main fuse. See **Electrical → POWER DISCONNECT**.
2. Remove saddle bags, if equipped. See **Chassis → SADDLEBAGS**.
3. Remove seat. See **Chassis → SEAT**.
4. **FXDRS:** Remove side covers. See **Chassis → LEFT SIDE COVER** and **Chassis → RIGHT SIDE COVER**

Remove

1. See Figure 1. Disconnect connectors (2, 3).
2. Discard cable strap(s) (1).
3. Remove fender.
   a. Support rear fender.
   b. Remove fender screws (4) and washers from both sides.
   c. Remove fender.

Install

1. See Figure 1. Install rear fender.
   a. Place fender into position.
   b. Install screws (4) and washers. Tighten.
      Torque: 57–62 N·m (42–46 ft-lbs) *Rear fender support screws*
2. Connect connectors (2, 3).
3. Install **new** cable strap(s) (1) into hole(s) on frame and attach cable.

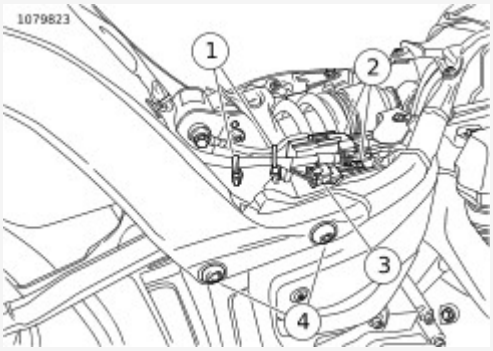

View interactive image

1	Cable strap
2	Connector (2)
3	Connector
4	Screw (4)

Figure 1. Rear Fender

Remove

1. See Figure 1. Remove tail section.
   a. Remove screws (2, 3).
   b. Remove tail section (1).

Install

1. See Figure 1. Install tail section.
   a. Place tail section (1) in position.
   b. Install screws (2).
      Torque: 23–27.1 N·m (17–20 ft-lbs) *Tail section rear screws*
   c. Install screws (3).
      Torque: 16.3–19 N·m (12–14 ft-lbs) *Tail section forward screws*

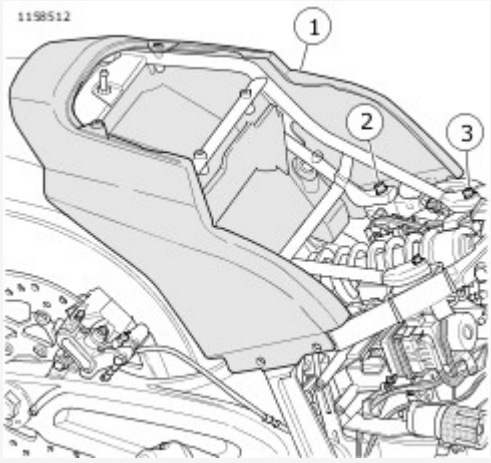

View interactive image

1	Fender tail section
2	Rear screw (2)
3	Forward screw (2)

Figure 1. Tail Fender Tail Section

Consumables

Description	Part Number	Size
LOCTITE 243 MEDIUM STRENGTH THREADLOCKER AND SEALANT (BLUE)	99642-97	6 ml (¼ fl oz)

Disassemble

1. Remove rear fender lighting. See Electrical → REAR TURN SIGNAL LAMPS and Electrical → TAIL LAMP.
2.

   NOTE

   Rear fender wire conduit is not reusable.

   Remove rear fender wire conduit, if necessary. See Chassis → REAR FENDER WIRE CONDUIT.
3. Remove license plate bracket mount. See Chassis → REAR LICENSE PLATE BRACKET.
4. See Figure 1. Remove fender support.
   a. Remove screws (13).
   b. Remove fender mounts (9,10).
   c. Remove fender supports (11,12).
5. Remove fender tip.
   a. Remove nuts (8).
   b. Remove fender tip (1).
6. Remove seat retention nut.
   a. Hold nut (7).
   b. Remove clip (2).
   c. Remove nut.
   d. If equipped, remove plugs (3).
7. Remove stud plate.
   a. Remove washers (4).
   b. Remove stud plate (6).

Assemble

1. See Figure 1. Install stud plate.
   a. Position stud plate (6) on fender.
   b. Install washers (4).
2. Install seat retention nut.
   a. Position nut (7) through fender.
   b. Install clip (2).
   c. If equipped, install plugs (3).
3. Install fender tip.

a. Position fender tip (1) on fender.

b. Install nuts (8).

4. Install fender supports.

   a. Align holes on fender supports (11,12) with holes in fender.

   b. Place fender mounts (10) in the holes near rear of fender.

   c. Place fender mounts (9) in the holes near front of fender.

   d. Apply threadlock and Install screws (13). Tighten.
   Torque: 28–37 N·m (21–27 ft-lbs) *Rear fender support screws*
   LOCTITE 243 MEDIUM STRENGTH THREADLOCKER AND SEALANT (BLUE) (99642-97)

5. Install license plate bracket mount. See **Chassis → REAR LICENSE PLATE BRACKET**.

6. Install rear fender wire conduit. See **Chassis → REAR FENDER WIRE CONDUIT**.

7. Install fender lighting. See **Electrical → REAR TURN SIGNAL LAMPS** and **Electrical → TAIL LAMP**.

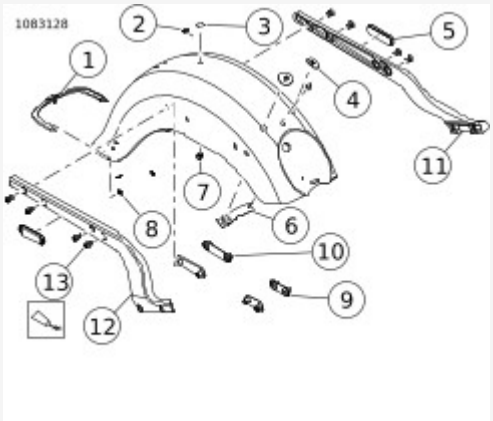

View interactive image

1	Fender tip
2	Clip
3	Plug (2)
4	Washer (2)
5	Reflector (2)
6	Stud plate
7	Nut
8	Nut (3)
9	Fender mount rear (2)
10	Fender mount front (2)

11	Left fender support
12	Right fender support
13	Fender support screw (8)

Figure 1. Full Fender

Consumables

Description	Part Number	Size
LOCTITE 243 MEDIUM STRENGTH THREADLOCKER AND SEALANT (BLUE)	99642-97	6 ml (¼ fl oz)

Disassemble

1. Remove taillight, if equipped. See Electrical → TAIL LAMP.
2. Remove license plate bracket. See Chassis → REAR LICENSE PLATE BRACKET.
3. See Chassis → REAR FENDER → Disassemble and Assemble: Chopped Fender Without License Plate Bracket Lighting → Chopped Fender: W/O License Plate Bracket, Chassis → REAR FENDER → Disassemble and Assemble: Chopped Fender Without License Plate Bracket Lighting → Chopped Fender: With Licence Plate Bracket, W/O Inner Fender Mounting Screws or Chassis → REAR FENDER → Disassemble and Assemble: Chopped Fender Without License Plate Bracket Lighting → Chopped Fender: With license Plate Bracket and Inner Fender Mount Screws. Remove rear fender support.
   a. **Models equipped with inner fender mount screws:** Remove screws (13).
   b. Remove screws (11).
   c. Remove fender mounts (9).
   d. Remove fender supports (7,10).
   e. Remove license plate support bracket (12), if equipped.
4. Remove turn signals. See Electrical → REAR TURN SIGNAL LAMPS.
5. Remove reflector bracket (2) and reflectors (1, 6).
   a. Saw behind reflectors with mono-filament fishing line or waxed dental floss.
6.

   NOTE

   Some fenders will have two seat retention nuts.

   Remove seat retention nut.
   a. Hold nut (3).
   b. Remove clip (4).
7. See Chassis → REAR FENDER → Disassemble and Assemble: Chopped Fender Without License Plate Bracket Lighting → Chopped Fender: With license Plate Bracket and Inner Fender Mount Screws. Remove stud plate, if equipped.
   a. Remove washers (15).
   b. Remove stud plate (14).

Assemble

1. See Chassis → REAR FENDER → Disassemble and Assemble: Chopped Fender Without License Plate Bracket Lighting → Chopped Fender: With license Plate Bracket and Inner Fender Mount Screws. Install stud plate, if equipped.
   a. Position stud plate (14) on fender.
   b. Install washers (15).
2. See Chassis → REAR FENDER → Disassemble and Assemble: Chopped Fender Without License Plate Bracket Lighting → Chopped Fender: W/O License Plate Bracket, Chassis → REAR FENDER → Disassemble and Assemble: Chopped Fender Without License Plate Bracket Lighting → Chopped Fender: With Licence Plate Bracket, W/O Inner Fender Mounting Screws or Chassis → REAR FENDER → Disassemble and Assemble: Chopped Fender Without License Plate Bracket Lighting → Chopped Fender: With license Plate Bracket and Inner Fender Mount Screws. Install seat retention nut.
   a. Position nut (3).
   b. Install clip (4).
3. Install reflector bracket (2) and reflectors (1, 6).
   a. Clean mounting surface. See Chassis → MEDALLIONS, BADGES, TANK EMBLEMS AND ADHESIVE STRIPS.
   b. Test fit reflector (1, 6).
   c. Remove adhesive backing.
   d. Install and press firmly to adhere.
4. Install turn signals. See Electrical → REAR TURN SIGNAL LAMPS.
5. See Chassis → REAR FENDER → Disassemble and Assemble: Chopped Fender Without License Plate Bracket Lighting → Chopped Fender: W/O License Plate Bracket. **Models without license plate support brackets:** Install rear fender supports.

   NOTE

   Before installing fender supports, route and secure turn signal wire harnesses through fender supports. See Electrical → REAR TURN SIGNAL LAMPS

   a. Align holes on fender supports (7,10) with holes in fender.
   b. Place fender mounts (9) in holes on fender.
   c. Install screws (11). Tighten.
      Torque: 28–37 N·m (21–27 ft-lbs) *Rear fender support screw*
6. See Chassis → REAR FENDER → Disassemble and Assemble: Chopped Fender Without License Plate Bracket Lighting → Chopped Fender: With Licence Plate Bracket, W/O Inner Fender Mounting Screws or Chassis →

REAR FENDER → Disassemble and Assemble: Chopped Fender Without License Plate Bracket Lighting → Chopped Fender: With license Plate Bracket and Inner Fender Mount Screws. **Models with license plate support brackets:** Install rear fender supports.

a. Align holes on bracket (12) with holes on fender and insert fender mounts (9).

b. Align fender supports (7,10).

c. **Models equipped with license plate bracket and inner fender screws:** Apply threadlock and install screw (13) through license plate bracket. Tighten.
Torque: 28–37 N·m (21–27 ft-lbs) *Rear fender inner mount screw*
LOCTITE 243 MEDIUM STRENGTH THREADLOCKER AND SEALANT (BLUE) (99642-97)

d. Apply threadlock and install screws (11). Tighten.
Torque: 28–37 N·m (21–27 ft-lbs) *Rear fender support screw*
LOCTITE 243 MEDIUM STRENGTH THREADLOCKER AND SEALANT (BLUE) (99642-97)

7. Install license plate bracket. See Chassis → REAR LICENSE PLATE BRACKET.
8. Install taillight if equipped. See Electrical → TAIL LAMP.

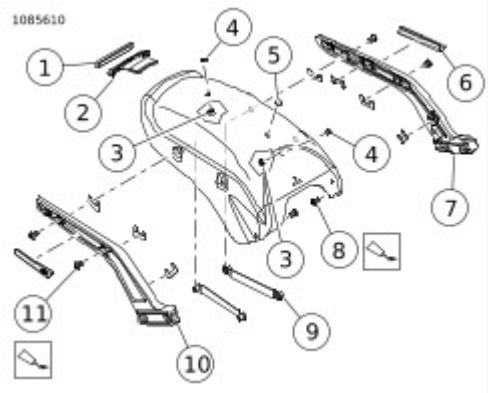

View interactive image

1	Rear reflector
2	Reflector bracket
3	Seat retention nut (2)
4	Clip (2)
5	Plug
6	Side reflector (2)
7	Left fender support
8	Inner fender screw (2)

9	Fender mount (2)
10	Right fender support
11	Fender support screw (4)

Figure 1. Chopped Fender: W/O License Plate Bracket

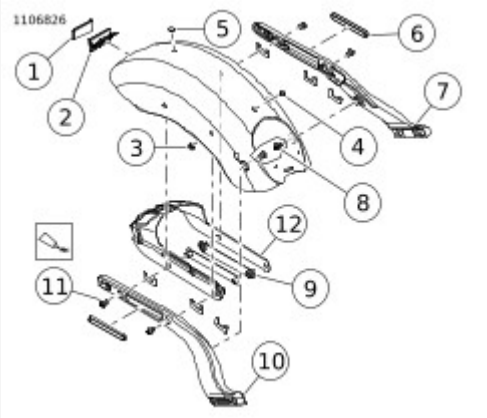

View interactive image

1	Rear reflector
2	Reflector bracket
3	Seat retention nut
4	Clip
5	Plug
6	Side reflector (2)
7	Left fender support
8	Inner fender screw (2)
9	Fender mount (2)
10	Right fender support
11	Fender support screw (4)
12	License plate support bracket

Figure 2. Chopped Fender: With Licence Plate Bracket, W/O Inner Fender Mounting Screws

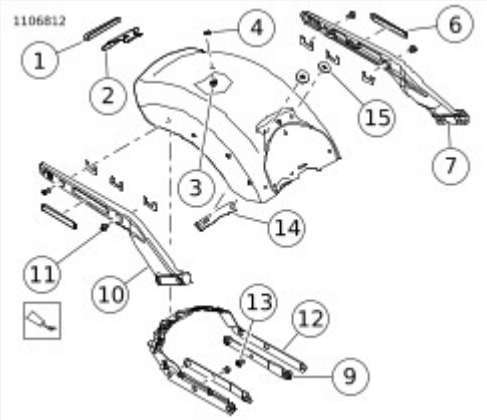

View interactive image

1	Rear reflector
2	Reflector bracket
3	Seat retention nut
4	Clip
6	Side reflector (2)
7	Left fender support
9	Fender mount (2)
10	Right fender support
11	Fender support screw (4)
12	License plate support bracket
13	Inner fender mount screw (2)
14	Stud plate
15	Washer (2)

Figure 3. Chopped Fender: With license Plate Bracket and Inner Fender Mount Screws

Consumables

Description	Part Number	Size
LOCTITE 243 MEDIUM STRENGTH THREADLOCKER AND SEALANT (BLUE)	99642-97	6 ml (¼ fl oz)

Disassemble

1. See Figure 1. Remove rear fender support.
   a. Remove screws (10).
   b. Remove saddlebag mounting bracket (9) and spacer (8).
   c. Remove fender mount bracket (6).
   d. Remove fender supports (4, 7).
   e. Remove inner bracket assembly (13).
2. Discard cable strap (12).
3. Remove seat retention nuts.
   a. Hold nut (2).
   b. Remove clip (1).
4. Disassemble inner bracket assembly (13).
   a. Remove turn signals. See Electrical → REAR TURN SIGNAL LAMPS.
   b. Remove taillight. See Electrical → TAIL LAMP.
   c. Disassemble license plate bracket. See Chassis → REAR LICENSE PLATE BRACKET.
5. Remove reflectors (11).
   a. Saw behind reflectors with mono-filament fishing line or waxed dental floss.

Assemble

1. See Figure 1. Install reflectors (11).
   a. Clean mounting surface. See Chassis → MEDALLIONS, BADGES, TANK EMBLEMS AND ADHESIVE STRIPS.
   b. Test fit reflector.
   c. Remove adhesive backing.
   d. Install and press firmly to adhere.
2. Assemble inner bracket assembly (13).
   a. Assemble license plate bracket. See Chassis → REAR LICENSE PLATE BRACKET.
   b. Install taillight. See Electrical → TAIL LAMP.
   c. Install turn signals. See Electrical → REAR TURN SIGNAL LAMPS.
3. Install seat retention nuts.
   a. Position nut (2).

b. Install clip (1).

4. Insert **new** cable strap (12) into fender.
5. Install rear fender support.
   a. Route harnesses through access hole in right side of fender.
   b. Install inner bracket assembly (13).
   c. Route and secure harnesses with cable strap (12).
   d. Install fender mount brackets (6).
   e. Install fender supports (4, 7).

NOTE
Route harnesses under right fender support (7).

   f. Install saddlebag mounting spacers (8) and brackets (9).
   g. Apply threadlocker and install screws (10). Tighten.
   Torque: 28–37 N·m (21–27 ft-lbs) *Rear fender support screw*
   [LOCTITE 243 MEDIUM STRENGTH THREADLOCKER AND SEALANT (BLUE) (99642-97)]

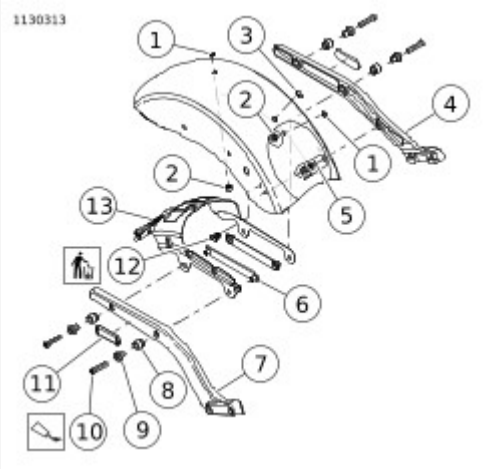

View interactive image

1	Clip (2)
2	Seat retention nut (2)
3	Plug
4	Left fender support
5	Fender seat nut screw (2)
6	Fender mount bracket (2)
7	Right fender support
8	Saddlebag mounting spacer (4)

9	Saddlebag mounting bracket (4)
10	Screw (4)
11	Reflector (2)
12	Anchored cable strap
13	Inner bracket assembly

Figure 1. Chopped Fender: License Plate Bracket With Lights

Consumables

Description	Part Number	Size
LOCTITE 243 MEDIUM STRENGTH THREADLOCKER AND SEALANT (BLUE)	99642-97	6 ml (¼ fl oz)

Disassemble

1. See Figure 1. Remove outer fender.
   a. Remove screw (6).
   b. Remove screws (1).
   c. Remove outer fender (2).
2. Remove inner fender.
   a. Remove screws (5).
   b. Remove inner fender (4).
3. Remove seat post.
   a. Remove screw (7) and washers (8).
   b. Remove cowl stud (9).

Assemble

1. See Figure 1. Install cowl stud.
   a. Install washer (8) on screw (7).
   b. Place washer and screw through fender support (3).
   c. Place washer on screw and install cowl stud (9). Tighten.
      Torque: 9–11 N·m (80–97 **in-lbs**) *Cowl stud screw*
2. Install inner fender.
   a. Position inner fender (4) on fender support (3).
   b. Apply threadlocker to screws (5).
      LOCTITE 243 MEDIUM STRENGTH THREADLOCKER AND SEALANT (BLUE) (99642-97)
   c. Install screws. Tighten.
      Torque: 2.7–5.4 N·m (24–48 **in-lbs**) *Tail section inner fender screw*
3. Install outer fender.
   a. Position outer fender (2) on fender support (3).
   b. Apply threadlocker to screw (6).
      LOCTITE 243 MEDIUM STRENGTH THREADLOCKER AND SEALANT (BLUE) (99642-97)
   c. Install screw. Tighten.
      Torque: 2.7–5.4 N·m (24–48 **in-lbs**) *Tail section inner fender screw to outer fender screw*
   d. Install screws (1). Tighten.
      Torque: 2.7–5.4 N·m (24–48 **in-lbs**) *Tail section outer fender screw*

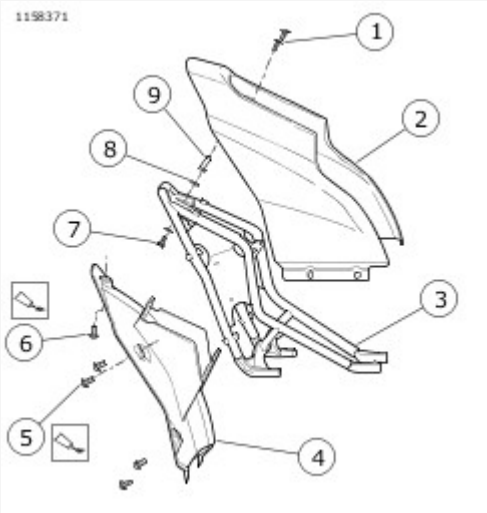

View interactive image

1	Screw (2)
2	Outer fender
3	Fender support
4	Inner fender
5	Screw (4)
6	Screw
7	Screw
8	Washer (2)
9	Stud

Figure 1. Tail Fender

COMPLETE

1. Install seat. See **Chassis → SEAT**.
2. Install saddle bags if removed. See **Chassis → SADDLEBAGS**.
3. Install main fuse. See **Electrical → FUSES**.
4. **FXDRS:** Install side covers. See **Chassis → LEFT SIDE COVER**. and **Chassis → RIGHT SIDE COVER**.

1. Remove rear fender. See **Chassis → REAR FENDER**.
2. Remove rear fender wire harness. See the electrical diagnostic manual.
   a. Remove wire terminals from harness connectors.
   b. Remove wire harness from conduit.

1. Remove conduit.
    a. Pull conduit from fender.
    b. Thoroughly clean inside surface of fender with soap and water until it is free of dirt, oil or other debris.

1. See Figure 1 , Figure 2 , Figure 3. Install wiring conduit.
   a. Clean mounting surface. See Chassis → MEDALLIONS, BADGES, TANK EMBLEMS AND ADHESIVE STRIPS.
   b. With the adhesive backing still in place, test fit the conduit.
   c. See Chassis → REAR FENDER WIRE CONDUIT → Install → Removing Protective Strip From Conduit and Chassis → REAR FENDER WIRE CONDUIT → Install → Purging Air Between Adhesive and Fender. Remove the adhesive backing (2).
   d. Lightly position the conduit (1) in place.
   e. Using a wallpaper roller (4), roll along conduit (3) to purge the air from between adhesive and fender.

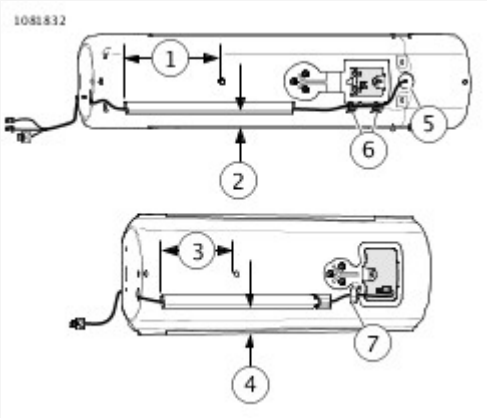

View interactive image

1	Distance 240 mm (9.45 in)
2	Distance 30 mm (1.18 in)
3	Distance 227 mm (8.94 in)
4	Distance 57 mm (2.24 in)
5	Grommet
6	Cable strap (2)
7	Tab

Figure 1. Fender Conduit Placement

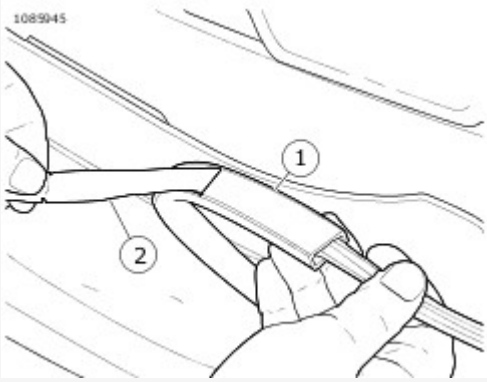

View interactive image

1	Conduit
2	Protective strip

Figure 2. Removing Protective Strip From Conduit

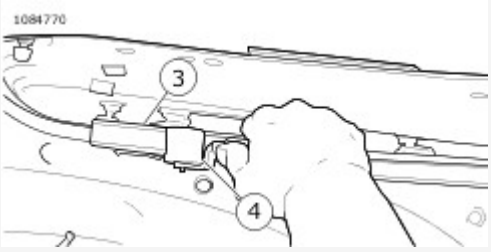

View interactive image

3	Conduit
4	Wallpaper roller

Figure 3. Purging Air Between Adhesive and Fender

1. Install wiring harness.
   a. Slide wiring harness through new conduit.
   b. Install wire terminals into connector housings. See the electrical diagnostic manual.

1. Install connectors to proper component and install rear fender. See **Chassis → REAR FENDER**.

Remove

1. See **Chassis → MUD GUARD → Install → Mud Guard**.
   Remove mud guard.
   a. Remove screws (1).
   b. Remove mud guard (2).

Install

1. See **Figure 1** Install mud guard.
   a. Place mud guard (2) in position.
   b. Install screws (1). Tighten.
      Torque: 3.4–4.5 N·m (30–40 **in-lbs**) *Mud guard screw*

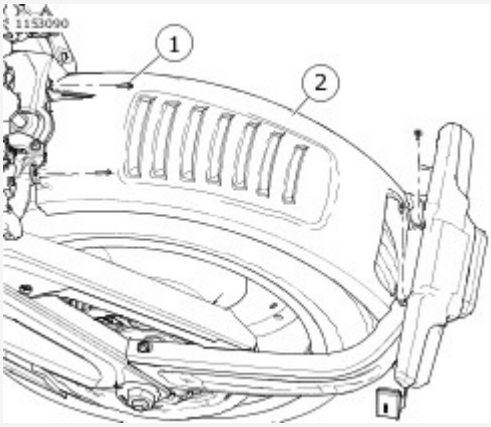

View interactive image

1	Screw (4)
2	Mud Guard

Figure 1. Mud Guard

Prepare

1. Remove main fuse. See Power disconnect.

Remove

1. See **Chassis → REAR LIGHTING BRACKET → Install → Rear Lighting Bracket**. Remove rear lighting bracket.
   a. Remove screws (1).
   b. Remove screws (4).
   c. Remove mounting bracket (2).
   d. Disconnect connector (3).

Consumables

Description	Part Number	Size
LOCTITE 243 MEDIUM STRENGTH THREADLOCKER AND SEALANT (BLUE)	99642-97	6 ml (¼ fl oz)

Install

1. See Figure 1. Install rear lighting mounting bracket.
   a. Apply threadlocker to screws (4).
   LOCTITE 243 MEDIUM STRENGTH THREADLOCKER AND SEALANT (BLUE) (99642-97)
   b. Connect connector (3).
   c. Place rear lighting mounting bracket (2) on rear fork.
   d. Install screws (4). Tighten three screws evenly in an alternating pattern to specification.
   Torque: 30–34 N·m (22–25 ft-lbs) *Rear lighting mounting bracket screws*
   e. Install screws (1).
   Torque: 3.4–4.5 N·m (30–40 **in-lbs**) *Mud guard screw*

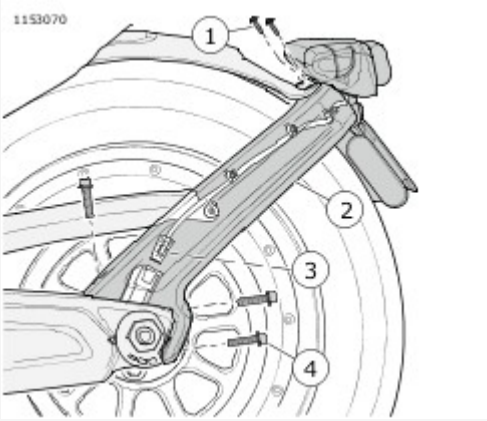

View interactive image

1	Screw (2)
2	Rear lighting bracket
3	Connector
4	Screw (3)

Figure 1. Rear Lighting Bracket

Complete

1. Install main fuse. See **Electrical → POWER DISCONNECT**.

1. See **Chassis → SAREE GUARD → Install → Saree Guards**Remove upper saree guard.
   a. Remove screws (1) and washers.
   b. Remove guard (2).
2. Remove lower saree belt guard.
   a. Remove screws (3, 5).
   b. Remove guard (4).

Consumables

Description	Part Number	Size
LOCTITE 243 MEDIUM STRENGTH THREADLOCKER AND SEALANT (BLUE)	99642-97	6 ml (¼ fl oz)

1. See **Figure 1**. Install upper saree guard.
   a. Place upper saree guard (2) in position.
   b. Install threadlocker to screws (1).
      LOCTITE 243 MEDIUM STRENGTH THREADLOCKER AND SEALANT (BLUE) (99642-97)
   c. Install screws and washers. Tighten.
      Torque: 28–37 N·m (21–27 ft-lbs) *Saree upper guard screw*
2. Install lower saree belt guard.
   a. Place lower saree belt guard (4) in position with the lower tab behind P-clamp (6).
   b. Install threadlocker to screws (3,5).
      LOCTITE 243 MEDIUM STRENGTH THREADLOCKER AND SEALANT (BLUE) (99642-97)
   c. Install screws.
   d. Tighten screw (3).
      Torque: 8–9 N·m (71–80 **in-lbs**) *Saree lower guard top screw*
   e. Tighten screw (5).
      Torque: 14–18 N·m (10–13 ft-lbs) *Saree lower guard lower screw*

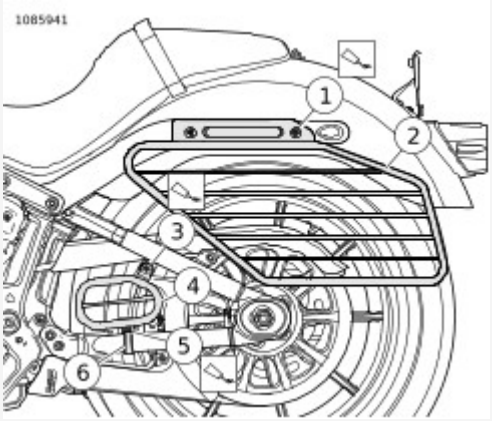

View interactive image

1	Screws (2)
2	Upper saree guard
3	Screw
4	Lower saree belt guard

5	Screw
6	P-clamp

Figure 1. Saree Guards

1. See **Chassis → FRONT LICENSE PLATE BRACKET → Install → License Plate Bracket**. Remove front license plate bracket.
   a. Remove screw(s) (5,6,7, or 8), washer(s) (4) and spacer (9), depending on the bracket.
   b. Remove license plate bracket (1,2, or 3).

1. See **Chassis → FRONT LICENSE PLATE BRACKET → Install → License Plate Bracket**. Install front license plate bracket.
   a. If equipped with two hole bracket (1), position bracket on lower triple clamp. Install washers (4) and screws (5). Tighten.
      Torque: 22–27 N·m (16–20 ft-lbs) *Front licence plate two hole bracket screw*
   b. If equipped with slotted bracket (2) with short screw (6), position bracket on lower triple clamp. Install washer (4) and screw. Tighten.
      Torque: 8–12 N·m (6–9 ft-lbs) *Front licence plate slotted bracket screw without spacer*
   c. If equipped with slotted bracket (2) with long screw (7), position spacer (9) and bracket on lower triple clamp. Install washer (4) and screw. Tighten.
      Torque: 30–38 N·m (22–28 ft-lbs) *Front licence plate slotted bracket screw with spacer*
   d. If equipped with two tab bracket (3), position bracket on lower triple clamp. Install screw (8). Tighten.
      Torque: 30–38 N·m (22–28 ft-lbs) *Front licence plate two tab bracket screw*

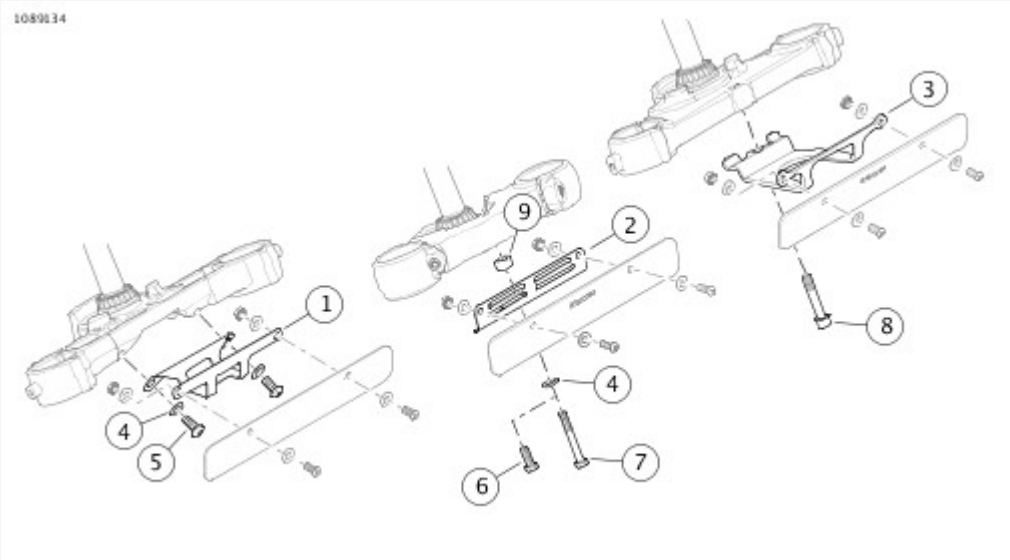

View interactive image

1	Two hole bracket
2	Slotted bracket
3	Two tab bracket
4	Washer
5	Button head screw (2)
6	Hex head short screw

7	Hex head long screw
8	Socket head screw
9	Spacer

Figure 1. License Plate Bracket

Remove side mounted bracket: See Electrical → REAR TURN SIGNAL LAMPS

Remove rear mounted bracket: See Electrical → LICENSE PLATE LAMP

Remove

1. See Chassis → REAR LICENSE PLATE BRACKET → Standard → Standard License Plate Bracket. Remove license plate bracket.
   a. Reach up under the rear fender and remove nuts (9).
   b. Remove license plate bracket assembly.

Install

1. Install license plate bracket on fender.
   a. Position license plate assembly on fender.
   b. Install screws (8) and nuts (9). Tighten.
      Torque: 8–11 N·m (71–97 **in-lbs**) *License plate standard mount screws*

Disassemble

1. Disassemble license plate bracket.
   a. Remove nut (6), washer (5) and bolt (2).
   b. Separate the bracket (3), clamp (4) and support (7).
2. Remove reflector if needed. See Chassis → MEDALLIONS, BADGES, TANK EMBLEMS AND ADHESIVE STRIPS

Assemble

1. Assemble the license plate bracket.
   a. Position clamp (4) between the bracket (3) and the support (7).
   b. Install bolt (2), washer (5) and nut (6). Tighten.
      Torque: 7–10 N·m (62–89 **in-lbs**) *License plate standard assembly bolt*
   c. Install reflector (1) if removed. See Chassis → MEDALLIONS, BADGES, TANK EMBLEMS AND ADHESIVE STRIPS

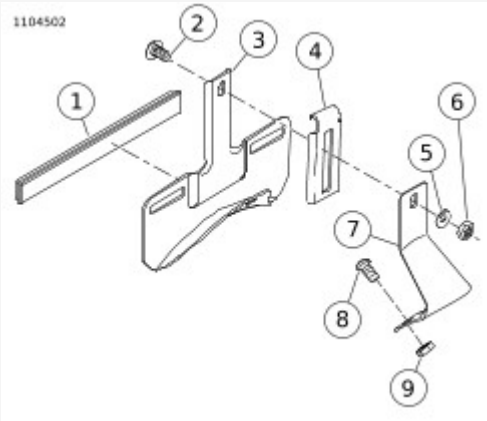

View interactive image

1	Reflector
2	Bolt
3	Bracket
4	Clamp
5	Washer
6	Nut
7	Support
8	Screw (3)
9	Nut (3)

Figure 1. Standard License Plate Bracket

Remove

1. See **Figure 1**. Remove license plate bracket.
   a. Remove nuts (3) and screws (1).
   b. Remove license plate bracket assembly (2).

Install

1. See **Figure 1**. Install license plate assembly.
   a. Position license plate bracket assembly (2) on rear lighting bracket.
   b. Install screws (1) and nuts (3). Tighten.
      Torque: 6.8–7.9 N·m (60–70 **in-lbs**) *License plate bracket screws - lighting bracket mount*

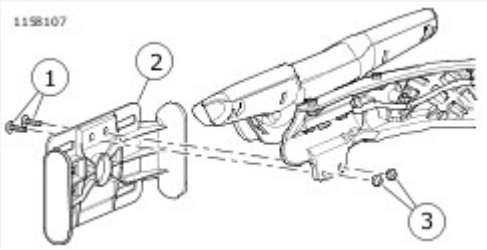

View interactive image

1	Screw (2)
2	Rear lighting bracket assembly
3	Nut (2)

Figure 1. Rear Lighting Bracket Mounted

Disassemble

1. See Chassis → REAR LICENSE PLATE BRACKET → Center Mount → Center Mount License Plate Bracket.
   Remove center mounted license plate bracket.
   a. Remove license plate lamp housing. See Electrical → LICENSE PLATE LAMP.
   b. Remove screws (3,5) from rear fender support (4).
   c. Separate license plate bracket (2) from rear fender support.

Assemble

1. Install center mounted license plate bracket.
   a. Align holes on center mounted licence plate bracket (2) with rear fender support (4).
   b. Install screws (5). Tighten.
      Torque: 2.03–2.37 N·m (18–21 **in-lbs**) *License plate bracket inner mounting screws*
   c. Install screws (3). Tighten.
      Torque: 7.11–8.69 N·m (63–77 **in-lbs**) *License plate bracket outer mounting screws*
2. Install center mount lamp housing. See Electrical → LICENSE PLATE LAMP

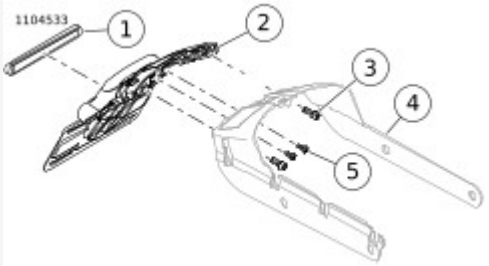

View interactive image

1	Reflector
2	License plate bracket
3	Screw (2)
4	Rear fender support
5	Screw (2)

Figure 1. Center Mount License Plate Bracket

Disassemble

1. Remove license plate lamp. See Electrical → LICENSE PLATE LAMP.
2. Remove turn signal lamps. See Electrical → REAR TURN SIGNAL LAMPS.
3. See Figure 1. Remove center mount licence plate holder.
   a. Remove screws (4).
   b. Disassemble license plate holder (3), support bracket assembly (1) and support bracket reinforcement (2).

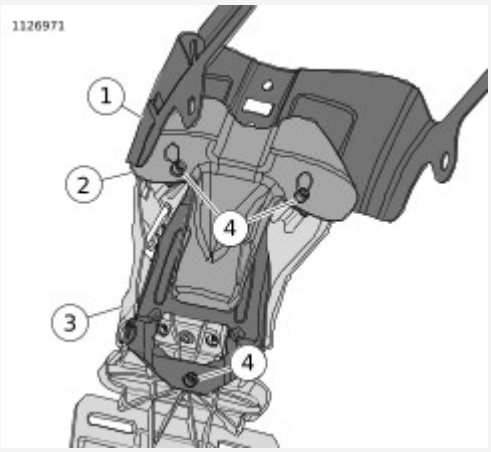

View interactive image

1	Support bracket assembly
2	Support bracket reinforcement
3	License plate holder
4	Screw (3)

Figure 1. License Plate Support Assembly

Assemble

1. See Figure 1. Install center mount licence plate holder.
   a. Assemble license plate holder (3), support bracket assembly (1) and support bracket reinforcement (2).
   b. Install screws (4). Tighten.
      Torque: 7.11–8.69 N·m (63–77 **in-lbs**) *License plate holder screw*
2. Install license plate lamp. See Electrical → LICENSE PLATE LAMP.
3. Install turn signal lamps. See Electrical → REAR TURN SIGNAL LAMPS.

1. Set motorcycle upright. See **Maintenance → GENERAL → Secure the Motorcycle for Service**.
2. Remove shifter linkage. See **Drive and Transmission → SHIFTER LINKAGE**.

1. See **Chassis → LEFT FOOT CONTROLS → Install → Left Foot Support Bracket (Typical)**. Remove foot support bracket.
   a. Remove screws (2).
   b. Remove foot support bracket (1).

Consumables

Description	Part Number	Size
LOCTITE 243 MEDIUM STRENGTH THREADLOCKER AND SEALANT (BLUE)	99642-97	6 ml (¼ fl oz)

1. See **Figure 1**. Install foot support bracket.
   a. Apply threadlocker to screws (2).
      LOCTITE 243 MEDIUM STRENGTH THREADLOCKER AND SEALANT (BLUE) (99642-97)
   b. Install foot support bracket (1).
   c. Install screws. Tighten.
      Torque: 54.2–61 N·m (40–45 ft-lbs) *Foot support bracket screws*

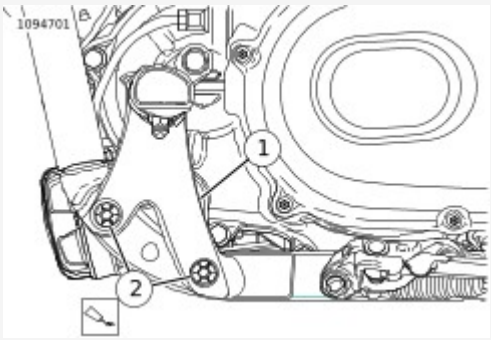

View interactive image

1	Foot support bracket
2	Screw (2)

Figure 1. Left Foot Support Bracket (Typical)

Special Tools

Description	Part Number	Qty.
E-CLIP TOOL	HD-52369	1

Consumables

Description	Part Number	Size
LOCTITE 243 MEDIUM STRENGTH THREADLOCKER AND SEALANT (BLUE)	99642-97	6 ml (¼ fl oz)

Disassemble

1. See Figure 1. Remove shift lever bracket.
   a. Remove screws (3).
   b. Remove shift lever bracket (2).
   c. Inspect O-rings (1) for damage, replace if necessary.
2. See Figure 2. Remove wear peg (6), if equipped.
3. Remove footboard.

NOTE

Be careful when removing E-clip, use E-clip tool to help prevent damage to painted surfaces.

   a. Remove E-clip (5).

      Special Tool: E-CLIP TOOL (HD-52369)

   b. Remove clevis pin (2).
   c. Remove torsion spring (4).
   d. Remove footboard (3).

Assemble

1. See Figure 2. Install footboard.
   a. Insert short leg of torsion spring (4) in hole in footboard (3).
   b. Position footboard and torsion spring on foot support bracket (1).
   c. Install clevis pin (2).

NOTE

Be careful when installing E-clip, use E-clip tool to help prevent damage to painted surfaces.

d. Install E-clip (5).

Special Tool: **E-CLIP TOOL** (HD-52369)

e. Push the long leg of the torsion spring into the slot in the foot support bracket.

2. Install wear peg, if equipped.
   a. Apply threadlocker to wear peg.
   LOCTITE 243 MEDIUM STRENGTH THREADLOCKER AND SEALANT (BLUE) (99642-97)
   b. Install wear peg (6). Tighten.
   Torque: 3.4–4.7 N·m (30–42 **in-lbs**) *Wear peg*
3. See **Figure 1**. Install shift lever bracket.
   a. Install shift lever bracket (2).
   b. Apply threadlocker to screws.
   LOCTITE 243 MEDIUM STRENGTH THREADLOCKER AND SEALANT (BLUE) (99642-97)
   c. Install screws (3). Tighten.
   Torque: 13.6–16.3 N·m (120–144 **in-lbs**) *Shift lever bracket screws*
   d. If removed, install O-rings (1).

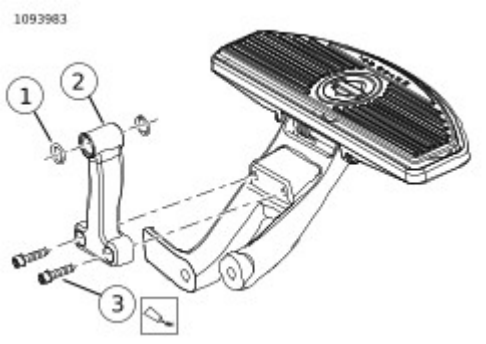

View interactive image

1	O-ring (2)
2	Shift lever bracket
3	Screw (2)

Figure 1. Shift Lever Bracket

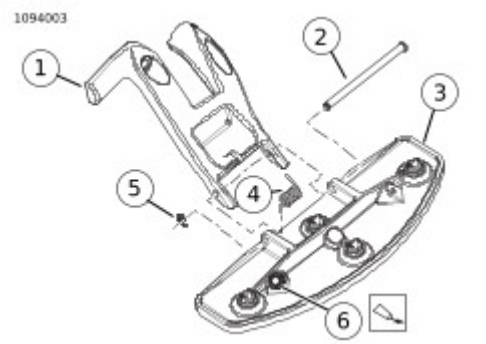

View interactive image

1	Foot support bracket
2	Clevis pin
3	Footboard
4	Torsion spring
5	E-clip
6	Wear peg

Figure 2. Left Side Footboard (Typical)

Special Tools

Description	Part Number	Qty.
E-CLIP TOOL	HD-52369	1

Consumables

Description	Part Number	Size
LOCTITE 243 MEDIUM STRENGTH THREADLOCKER AND SEALANT (BLUE)	99642-97	6 ml (¼ fl oz)

Disassemble

1. See Figure 1. Remove wear peg (7), if equipped.
2. Remove footpeg.

   NOTE

   When removing E-clip, use E-clip tool to prevent damage to painted surfaces.

   a. Remove E-clip (2).

      Special Tool: E-CLIP TOOL (HD-52369)

   b. Remove clevis pin (5).
   c. Remove footpeg (3).
   d. Remove torsion spring (4).
3. Inspect O-rings (1) for damage, replace if necessary.

Assemble

1. See Figure 1. Install footpeg (3).
   a. Insert short leg of torsion spring (4) into hole in footpeg.
   b. Insert long leg of torsion spring into hole in foot support (6).
   c. Rotate footpeg into position and install clevis pin (5).

      NOTE

      When installing E-clip, use E-clip tool to prevent damage to painted surfaces.

   d. Install E-clip (2).

      Special Tool: E-CLIP TOOL (HD-52369)

2. If removed, install O-rings (1).
3. Install wear peg, if equipped.
   a. Apply threadlocker to wear peg.
      LOCTITE 243 MEDIUM STRENGTH THREADLOCKER AND SEALANT (BLUE) (99642-97)
   b. Install wear peg (7). Tighten.
      Torque: 3.4–4.7 N·m (30–42 **in-lbs**) *Wear peg*

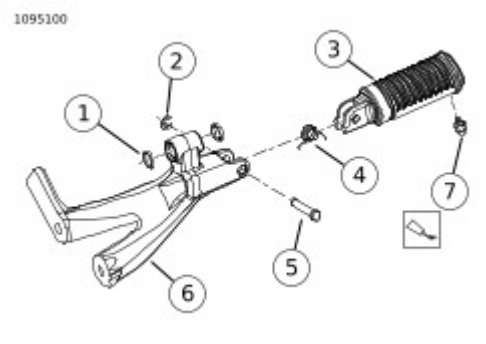

View interactive image

1	O-ring (2)
2	E-clip
3	Footpeg
4	Torsion spring
5	Clevis pin
6	Foot support bracket
7	Wear peg

Figure 1. Left Side Footpeg (Typical)

1. Install shifter linkage. See **Drive and Transmission → SHIFTER LINKAGE**.
2. Remove vehicle from upright. See **Maintenance → GENERAL → Secure the Motorcycle for Service**.

Consumables

Description	Part Number	Size
LOCTITE 243 MEDIUM STRENGTH THREADLOCKER AND SEALANT (BLUE)	99642-97	6 ml (¼ fl oz)

Remove

1. See Figure 1. Remove foot support bracket
   a. Remove screws (2).
   b. Remove foot support bracket (1).
2. See Figure 2. Remove brake pedal.
   a. Remove rear master cylinder bracket (5). See Chassis → REAR BRAKE MASTER CYLINDER.
   b. Remove rear brake master cylinder clevis pin (8). See Chassis → REAR BRAKE MASTER CYLINDER.
   c. Remove flange nut (7) and washer (6).
   d. Remove screw (1) and large washer (2).
   e. Remove brake pedal (3).
   f. Inspect O-rings (4) for damage, replace if necessary

Install

1. See Figure 2. Install brake pedal.
   a. If removed, install O-rings (4).
   b. Install brake pedal (3).
   c. Install screw (1) and large washer (2).
   d. Install washer (6) and flange nut (7). Tighten.
      Torque: 24.4–29.8 N·m (18–22 ft-lbs) *Brake pedal pivot screw*
   e. Install rear brake master cylinder clevis pin (8). See Chassis → REAR BRAKE MASTER CYLINDER.
   f. Install rear master cylinder bracket (5). See Chassis → REAR BRAKE MASTER CYLINDER.
2. See Figure 1. Install foot support bracket.
   a. Apply threadlocker to screws (2).
      LOCTITE 243 MEDIUM STRENGTH THREADLOCKER AND SEALANT (BLUE) (99642-97)
   b. Install foot support bracket (1).
   c. Install screws. Tighten.
      Torque: 54.2–61 N·m (40–45 ft-lbs) *Foot support bracket screws*

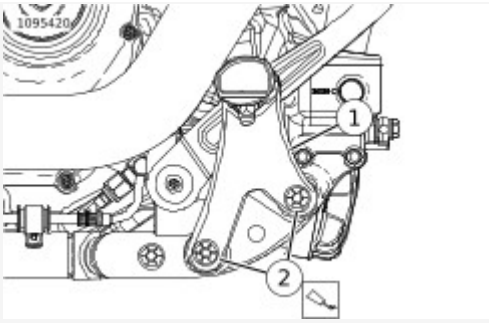

View interactive image

1	Foot support bracket
2	Screw (2)

Figure 1. Right Foot Support Bracket (Typical)

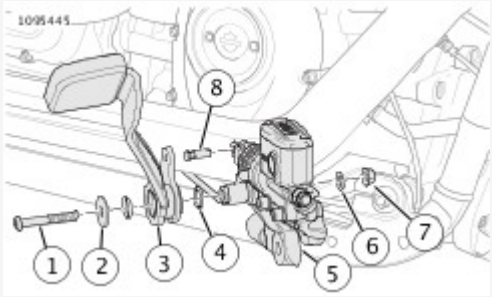

View interactive image

1	Screw
2	Large washer
3	Brake pedal
4	O-ring (2)
5	Bracket
6	Washer
7	Flange nut
8	Clevis pin

Figure 2. Brake Pedal

Consumables

Description	Part Number	Size
LOCTITE 243 MEDIUM STRENGTH THREADLOCKER AND SEALANT (BLUE)	99642-97	6 ml (¼ fl oz)

Remove

1. See Figure 1. Remove brake pedal.
   a. Remove front brake pedal linkage screw (2).
   b. Remove pivot screw (1) and washer (6).
   c. Remove brake pedal.
   d. Remove rear brake pedal linkage screw (5).
2. Remove foot support bracket
   a. Remove screws (3).
   b. Remove foot support bracket (4).

Install

1. See Figure 1. Install foot support bracket.
   a. Apply threadlocker to screws (3).
      LOCTITE 243 MEDIUM STRENGTH THREADLOCKER AND SEALANT (BLUE) (99642-97)
   b. Install foot support bracket (4).
   c. Install screws (3). Tighten.
      Torque: 54.2–61 N·m (40–45 ft-lbs) *Foot support bracket screws*
2. Install brake pedal.
   a. Apply threadlocker to rear brake pedal linkage screw (5).
      LOCTITE 243 MEDIUM STRENGTH THREADLOCKER AND SEALANT (BLUE) (99642-97)
   b. Install rear brake pedal linkage screw. Tighten.
      Torque: 20.3–24.4 N·m (15–18 ft-lbs) *Brake pedal linkage screw*
   c. Install brake pedal.
   d. Apply threadlocker to pivot screw (1).
      LOCTITE 243 MEDIUM STRENGTH THREADLOCKER AND SEALANT (BLUE) (99642-97)
   e. Install pivot screw and washer (6). Tighten.
      Torque: 13.6–19 N·m (10–14 ft-lbs) *Brake pedal pivot screw*
   f. Apply threadlocker to front brake pedal linkage screw (2).
      LOCTITE 243 MEDIUM STRENGTH THREADLOCKER AND SEALANT (BLUE) (99642-97)
   g. Install front brake pedal linkage screw. Tighten.
      Torque: 20.3–24.4 N·m (15–18 ft-lbs) *Brake pedal linkage*

screw

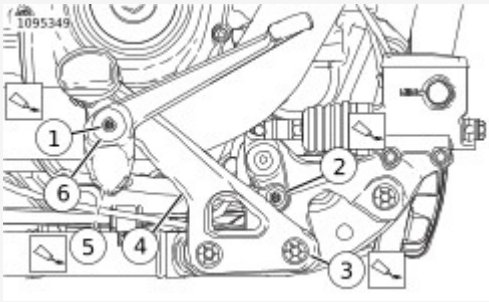

View interactive image

1	Pivot screw
2	Front linkage screw
3	Screw (2)
4	Foot support bracket
5	Rear linkage screw
6	Washer

Figure 1. Right Side Mid Controls

Special Tools

Description	Part Number	Qty.
E-CLIP TOOL	HD-52369	1

Consumables

Description	Part Number	Size
LOCTITE 243 MEDIUM STRENGTH THREADLOCKER AND SEALANT (BLUE)	99642-97	6 ml (¼ fl oz)

Disassemble

1. See Figure 1. Remove wear peg (5), if equipped.
2. Remove footboard.

NOTE

When removing E-clip, use E-clip tool to help prevent damage to painted surfaces.

a. Remove E-clip (3).

Special Tool: E-CLIP TOOL (HD-52369)

b. Remove clevis pin (6).
c. Remove torsion spring (2).
d. Remove footboard (4).

Assemble

1. See Figure 1. Install footboard.
   a. Insert short leg of torsion spring (2) in hole in footboard (4).
   b. Position footboard and torsion spring on foot support bracket (1).
   c. Install clevis pin (6).

NOTE

When installing E-clip, use E-clip tool to help prevent damage to painted surfaces.

d. Install E-clip (3).

Special Tool: E-CLIP TOOL (HD-52369)

e. Push the long leg of the torsion spring into the slot in the

foot support bracket.

2. Install wear peg, if equipped.
   a. Apply threadlocker to wear peg.
      LOCTITE 243 MEDIUM STRENGTH THREADLOCKER AND SEALANT (BLUE) (99642-97)
   b. Install wear peg (5). Tighten.
      Torque: 3.4–4.7 N·m (30–42 **in-lbs**) *Wear peg*

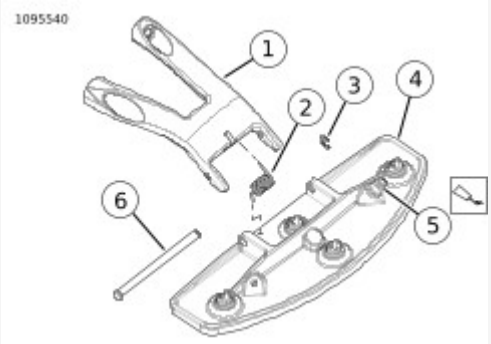

View interactive image

1	Foot support bracket
2	Torsion spring
3	E-clip
4	Footboard
5	Wear peg
6	Clevis pin

Figure 1. Right Side Footboard (Typical)

Special Tools

Description	Part Number	Qty.
E-CLIP TOOL	HD-52369	1

Consumables

Description	Part Number	Size
LOCTITE 243 MEDIUM STRENGTH THREADLOCKER AND SEALANT (BLUE)	99642-97	6 ml (¼ fl oz)

Disassemble

1. See Figure 1. Remove wear peg (4), if equipped.
2. Remove footpeg.

NOTE

When removing E-clip, use E-clip tool to help prevent damage to painted surfaces.

a. Remove E-clip (5).

Special Tool: E-CLIP TOOL (HD-52369)

b. Remove clevis pin (1).
c. Remove footpeg (3).
d. Remove torsion spring (2).

Assemble

1. See Figure 1. Install footpeg.
   a. Insert short leg of torsion spring (2) into hole in footpeg (3).
   b. Insert long leg of torsion spring into hole in foot support bracket (6).
   c. Rotate footpeg into position and install clevis pin (1).

NOTE

When installing E-clip, use E-clip tool to help prevent damage to painted surfaces.

   d. Install E-clip (5).

Special Tool: E-CLIP TOOL (HD-52369)

2. Install wear peg, if equipped.

a. Apply threadlocker to wear peg.
   LOCTITE 243 MEDIUM STRENGTH THREADLOCKER AND SEALANT (BLUE) (99642-97)

b. Install wear peg (4). Tighten.
   Torque: 3.4–4.7 N·m (30–42 **in-lbs**) *Wear peg*

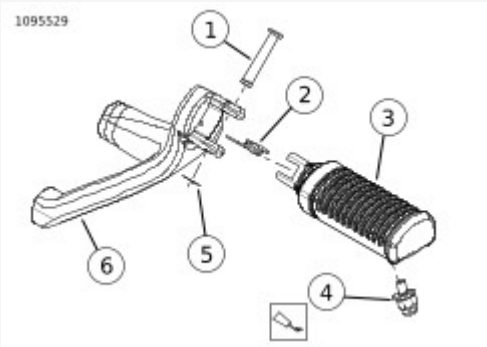

View interactive image

1	Clevis pin
2	Torsion spring
3	Footpeg
4	Wear peg
5	E-clip
6	Foot support bracket

Figure 1. Right Side Footpeg (Typical)

Special Tools

Description	Part Number	Qty.
E-CLIP TOOL	HD-52369	1

1. See **Chassis → PASSENGER FOOTRESTS → Install → Passenger Footpeg**. Remove footpeg.

   NOTE

   When removing e-clip, use e-clip tool to help prevent damage to painted surfaces.

   a. Remove e-clip (8).

      Special Tool: **E-CLIP TOOL** (HD-52369)

   b. Remove clevis pin (3).

      NOTE

      Remove footpeg and detent plate as an assembly to keep detent ball and detent spring in place.

   c. Remove footpeg (5) with detent plate (4).

2. **NOTE**

   Detent ball is under spring pressure, place finger over detent ball when removing detent plate to keep detent ball from falling out.

   Remove detent plate from footpeg.

3. Remove detent ball (7) and detent spring (6) from footpeg.
4. Remove footpeg support (1).
   a. Remove screw (2).
   b. Remove footpeg support.

Special Tools

Description	Part Number	Qty.
E-CLIP TOOL	HD-52369	1

Consumables

Description	Part Number	Size
LOCTITE 243 MEDIUM STRENGTH THREADLOCKER AND SEALANT (BLUE)	99642-97	6 ml (¼ fl oz)

1. See Figure 1. Install footpeg support (1).
   a. **Right side:** Align notch in footpeg support with alignment tab on exhaust bracket.

   NOTE

   FLHC and FLHCS do not have alignment tabs for the passenger footpeg supports. Align footpeg supports at a 5–15° rearward angle.

   b. **Left side:** Align notch in footpeg support with rear fork pivot shaft.
   c. Apply threadlocker to screw (2).
   LOCTITE 243 MEDIUM STRENGTH THREADLOCKER AND SEALANT (BLUE) (99642-97)
   d. Install screw. Tighten.
   Torque: 51.5–63.7 N·m (38–47 ft-lbs) *Passenger footpeg support screw*
2. Install detent spring (6) and detent ball (7) into footpeg (5).
3. Install detent plate (4) onto footpeg.

   NOTE

   - Hold detent ball in place while installing detent plate to prevent detent ball from falling out.
   - Detent plate should be oriented with the detent holes on the bottom.
   - Make sure detent ball is aligned with the innermost hole in the detent plate when installed.

4.

   NOTE

   Install footpeg and detent plate as an assembly.

   Install footpeg.

a. Install footpeg into footpeg support.

b. Install clevis pin (3).

> **NOTE**
>
> When installing e-clip, use e-clip tool to help prevent damage to painted surfaces.

c. Install e-clip (8).

Special Tool: **E-CLIP TOOL** (HD-52369)

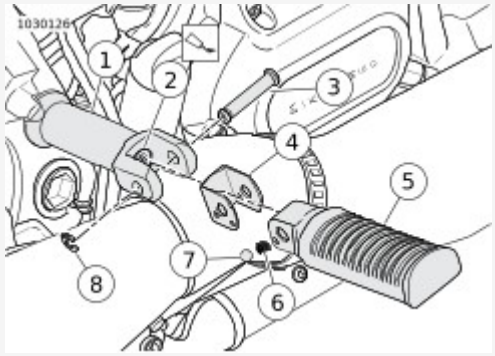

View interactive image

1	Footpeg support
2	Screw
3	Clevis pin
4	Detent plate
5	Footpeg
6	Detent spring
7	Detent ball
8	E-clip

Figure 1. Passenger Footpeg

1. Set motorcycle upright. See **Maintenance → GENERAL → Secure the Motorcycle for Service**.

1. See **Chassis → JIFFY STAND → Install → Jiffy Stand Screws**. Lower jiffy stand (1).
2. Remove screws (2).
3. Remove jiffy stand.

1. See **Figure 1**. Install Jiffy stand (1).
2. Install screws (2). Tighten.
   Torque: 54.2–61 N·m (40–45 ft-lbs) *Jiffy stand screws*

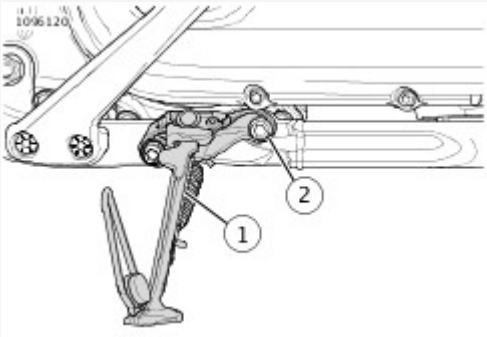

View interactive image

1	Jiffy stand
2	Screw (2)

Figure 1. Jiffy Stand Screws

1. See **Chassis → JIFFY STAND → Assemble → Jiffy Stand (Typical)**. Remove **JSS** (Jiffy stand sensor) (1), if equipped. See **Electrical → JIFFY STAND SENSOR (JSS)**.
2. Remove spring (3).
3. Remove E-clip (4).
4. Remove clevis pin (8).
5. Remove jiffy stand (6).
6. Remove bushings (5).
7. Inspect bushings for wear or damage, replace if necessary.
8. Remove jiffy stand bumper (7).

Consumables

Description	Part Number	Size
LOCTITE SILVER GRADE ANTI-SEIZE	11100001	20.7 ml (0.7 fl oz)

1. See **Figure 1**. Install jiffy stand bumper (7).
2. Install bushings (5).
3. Install jiffy stand (6).
4. Apply anti-sieze lubricant to clevis pin (8).
   LOCTITE SILVER GRADE ANTI-SEIZE (11100001)
5. Install clevis pin.
6. Install E-clip (4).
7. Apply anti-sieze lubricant to spring hook groove on jiffy stand bracket (2).
   LOCTITE SILVER GRADE ANTI-SEIZE (11100001)

   NOTE

   Spring hooks must point towards rear when jiffy stand is down.

8. Install spring (3).
9. Install **JSS** (Jiffy stand sensor) (1), if equipped. See **Electrical → JIFFY STAND SENSOR (JSS)**.

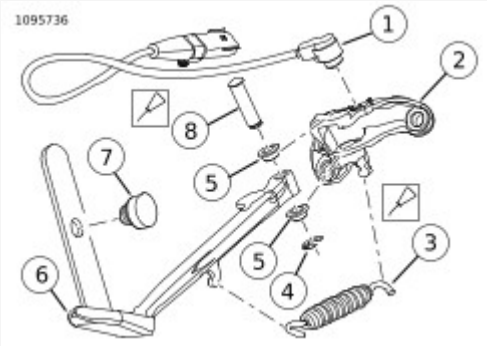

View interactive image

1	**JSS**
2	Jiffy stand bracket
3	Spring
4	E-clip
5	Bushing (2)
6	Jiffy stand
7	Bumper

8	Clevis pin

Figure 1. Jiffy Stand (Typical)

1. Remove vehicle from upright. See **Maintenance → GENERAL → Secure the Motorcycle for Service**.

Two-Up One-Piece Seat

1. See Chassis → SEAT → Install → Seat Options. Remove seat.
   a. Remove thumbscrew (1).
   b. Slide seat tongue out of the frame.
   c. Slide seat forward to remove from grab strap (4).
   d. Remove Screw (10), washer (9) and grab strap (4), if necessary.

Two-Up Two-Piece Seat

1. See Chassis → SEAT → Install → Seat Options. Remove seat.
   a. Remove the thumbscrew (1).
   b. Remove the passenger pillion (3).
   c. Remove mounting nuts (2).
   d. Remove seat and grab strap (4), if necessary.

Solo Seat

1. See Chassis → SEAT → Install → Seat Options. Remove seat.
   a. Remove thumbscrew (1) or mounting nuts (2).
   b. Remove seat.

Solo Seat W/Hex Head Screws

1. See Chassis → SEAT → Install → Seat Cowl. Remove seat cowl.
   a. Lift seat cowl (1) from back.
   b. Remove seat cowl.
2. Remove seat.
   a. Remove screws (2).
   b. Remove seat.

Two-up One-piece Seat

1. See Figure 4. Install Seat.

NOTE
See for FXBR/S, FLFB/S, FXFB/S grab strap installation.

   a. Install washer (9), screw (10) and grab strap (4) if removed. Tighten.
   Torque: 6.8–10.16 N·m (60–90 **in-lbs**) *One piece seat grab strap screw*
   b. Install seat (5) rearward through the grab strap.
   c. See Figure 1. Engage seat tongue in frame bracket.
   d. See Figure 4. Install thumbscrew (1). Tighten.
   Torque: 1.7–3.4 N·m (15–30 **in-lbs**) *Seat thumbscrew*
2. After installing seat, pull up on the seat to verify it is secure.

Two-up Two-piece Seat

1. See Figure 4. Install Seat.
   a. Install grab strap (4) if removed.
   b. See Figure 1. Engage seat tongue in frame bracket.
   c. See Figure 4. Install mounting nuts (2).
   d. Install passenger pillion (3).
   e. Install thumbscrew (1). Tighten.
   Torque: 1.7–3.4 N·m (15–30 **in-lbs**) *Seat thumbscrew*
2. After installing seat, pull up on the seat to verify it is secure.

Solo Seat

1. See Figure 4. Install Seat.
   a. See Figure 1 and . Engage seat tongue in frame bracket.
   b. See Figure 4. Install thumbscrew (1), if equipped. Tighten.
   Torque: 1.7–3.4 N·m (15–30 **in-lbs**) *Seat thumbscrew*
   c. Install mounting nuts (2), if equipped. Tighten.
   Torque: 1–1.7 N·m (9–15 **in-lbs**) *Seat mounting nut*
2. After installing seat, pull up on the seat to verify it is secure.

Solo Seat W/Hex Head Screws

1. Install Seat.
   a. See Figure 1. Engage seat tongue in frame bracket.
   b. See Figure 3. Install screws (2). Tighten.
   Torque: 9.5–12.2 N·m (84–108 **in-lbs**) *Seat, solo w/hex*

head screw

2. After installing seat, pull up on the seat to verify it is secure.
3. Align seat cowl and press down.

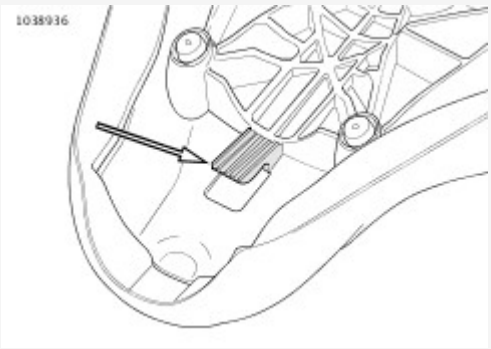

View interactive image

Figure 1. Seat Tongue (Typical)

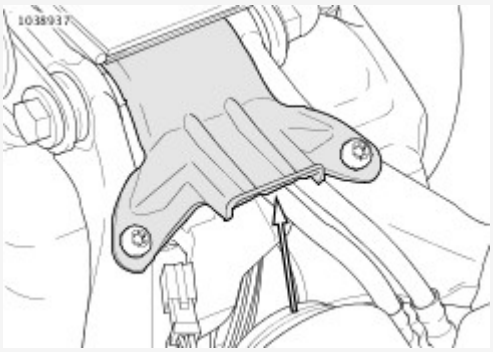

View interactive image

Figure 2. Seat Mounting Bracket

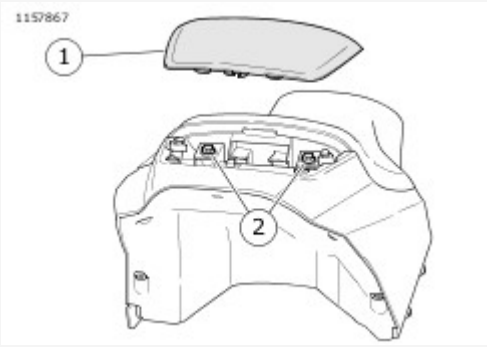

View interactive image

1	Seat cowl
2	Screw (2)

Figure 3. Seat Cowl

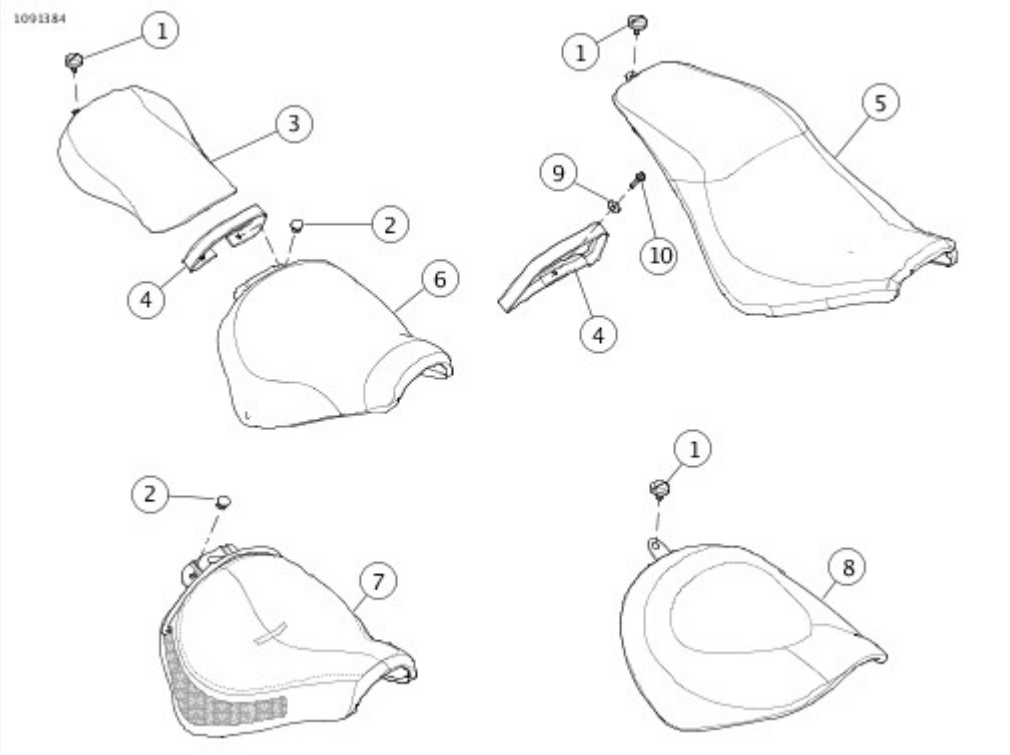

View interactive image

1	Thumbscrew
2	Mounting nut (2), [FXDRS: Screw (2)]
3	Pillion
4	Grab strap
5	Two-up one-piece seat
6	Two-up two-piece seat
7	Solo seat dual fastener
8	Solo seat single fastener
9	Washer
10	Screw

Figure 4. Seat Options

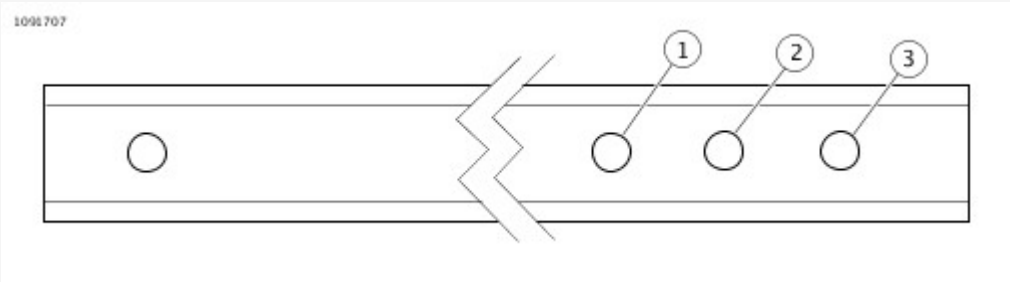

View interactive image

1	FXBR/S
2	FLFB/S
3	FXFB/S

Figure 5. Multi-hole Grab Strap Installation

1. Remove seat. See **Chassis → SEAT**.

1. See **Chassis → FRAME CROSSMEMBER → Install → Frame Crossmember**. **If equipped with hydraulic under seat adjust shock:**
   a. Remove screw (6) and washer (5).
   b. Move preload adjuster (4) forward.
2. Remove wire harness anchor (7).
3. Remove small screw (2).
4. Remove mounting screws (1).
5. Remove frame crossmember (3).

1. See **Figure 1**. Install frame crossmember (3).
2. Install small screw (2) hand tight.
3. Install mounting screws (1). Tighten.
   Torque: 23.1–27.1 N·m (17–20 ft-lbs) *Frame crossmember mounting screws*
4. Tighten small screw.
   Torque: 6.2–6.8 N·m (55–60 **in-lbs**) *ECM caddy small screw*
5. Install wire harness anchor (7).
6. **If equipped with hydraulic under seat adjust shock absorber:**
   a. Install preload adjuster (4).
   b. Install screw (6) and washer (5). Tighten.
      Torque: 6.1–8.8 N·m (54–78 **in-lbs**) *Shock adjuster mounting screw*

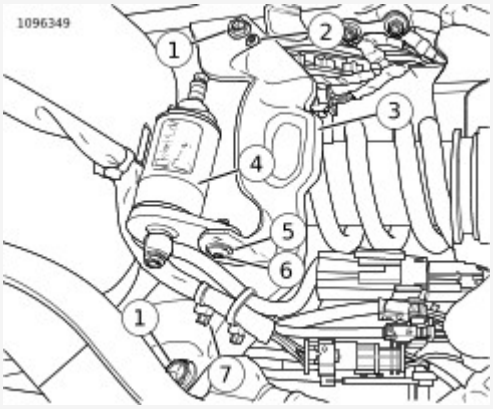

View interactive image

1	Mounting screw (2)
2	Small screw
3	Frame crossmember
4	Preload adjuster
5	Washer
6	Screw
7	Wire harness anchor

Figure 1. Frame Crossmember

1. Install seat. See **Chassis → SEAT**.

Consumables

Description	Part Number	Size
LOCTITE 243 MEDIUM STRENGTH THREADLOCKER AND SEALANT (BLUE)	99642-97	6 ml (¼ fl oz)

Remove

1. See Figure 2. Remove saddlebag.
   a. Open saddlebag lid.
   b. Remove screws (6).
   c. Pull saddlebag (7) out and remove.
   d. Remove spacers (5) and O-rings (4), if necessary.
2. See Figure 1. Remove right side mounting bracket grommet.
   a. Remove screw (2).
   b. Remove mounting bracket grommet (1).
3. See Figure 2. Remove left side mounting bracket grommet.
   a. Remove screw (2).
   b. Remove mounting bracket grommet (1).
   c. Remove screw (8).
   d. Remove mounting bracket (9).

Install

NOTICE

Check that saddlebag frame(s) are fully seated and tightly secured with mounting hardware. Failure to do so could result in the saddlebags becoming detached and/or damaged. (00171b)

1. See Figure 1. Install right side mounting bracket grommet.
   a. Seat the mounting bracket grommet (1) nubs with the holes on frame.
   b. Apply threadlock to screw (2).
      LOCTITE 243 MEDIUM STRENGTH THREADLOCKER AND SEALANT (BLUE) (99642-97)
   c. Install screw. Tighten.
      Torque: 10.9–13.6 N·m (96–120 **in-lbs**) *Saddlebag right side mounting bracket grommet screw*
2. See Figure 2. Install left side mounting bracket grommet.
   a. Position mounting bracket (9) on frame.
   b. Apply threadlock to screw (8).
      LOCTITE 243 MEDIUM STRENGTH THREADLOCKER AND SEALANT (BLUE) (99642-97)
   c. Install screw. Tighten.

Torque: 52–64 N·m (38–47 ft-lbs) *Saddlebag left side mounting bracket screw*

d. Seat the mounting bracket grommet (1) nubs with the holes on mounting bracket.

e. Apply threadlock to screw (2).
LOCTITE 243 MEDIUM STRENGTH THREADLOCKER AND SEALANT (BLUE) (99642-97)

f. Install screw. Tighten.
Torque: 10.9–13.6 N·m (96–120 **in-lbs**) *Saddlebag left side mounting bracket grommet screw*

3. Install saddlebag.

a. Position docking rod (3) on mounting bracket grommet (1).

b. Slide screws (6) through holes in saddlebag. Install spacers (5) and O-rings (4), if removed.

c. Apply threadlock to screws (6).
LOCTITE 243 MEDIUM STRENGTH THREADLOCKER AND SEALANT (BLUE) (99642-97)

d. Align screws on saddlebag with holes on fender support. Tighten.
Torque: 28–37 N·m (21–27 ft-lbs) *Saddlebag screw*

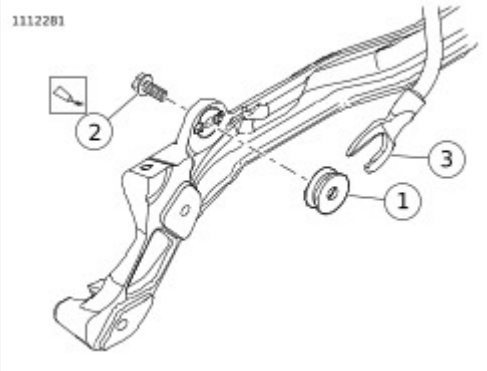

View interactive image

1	Mounting bracket grommet
2	Screw
3	Docking rod

Figure 1. Right Side Saddlebag Docking Rod

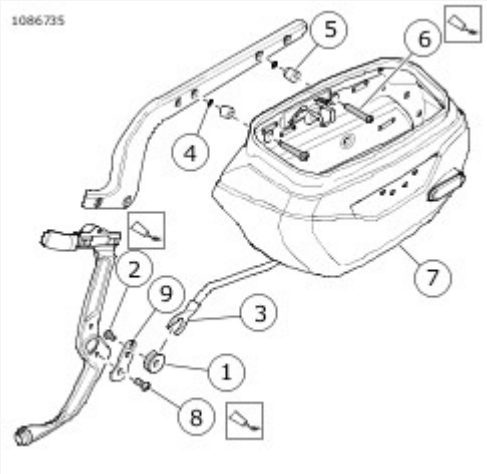

View interactive image

1	Mounting Bracket Grommet
2	Screw
3	Docking rod
4	O-ring (2)
5	Spacer (2)
6	Screw (2)
7	Saddlebag
8	Screw
9	Mounting bracket

Figure 2. Left Saddlebag

Consumables

Description	Part Number	Size
LOCTITE 243 MEDIUM STRENGTH THREADLOCKER AND SEALANT (BLUE)	99642-97	6 ml (¼ fl oz)

Remove

1. See Figure 1. Remove saddlebag.
   a. Open saddlebag outer clamshell (3).
   b. Pull out and turn lock knob (4) to the unlocked position (5).
   c. Close saddlebag outer clamshell and lower latch lever (2).
   d. See Figure 2. Slide saddlebag rearward to disengage the saddlebag docking rod (4) from the mounting bracket grommet (5).
   e. Lift saddlebag away from motorcycle.
2. See Figure 3 and Figure 4. Remove docking mount.
   a. Remove mounting bolt (5), docking mount (4) and spacer (3).
3. See Figure 3. Remove right side mounting bracket grommet.
   a. Remove screw (9).
   b. Remove mounting bracket grommet (7).
4. See Figure 4. Remove left side mounting bracket grommet.
   a. Remove screw (9).
   b. Remove mounting bracket grommet (7).
   c. Remove screw (11).
   d. Remove mounting bracket (10).

Install

NOTICE

Check that saddlebag frame(s) are fully seated and tightly secured with mounting hardware. Failure to do so could result in the saddlebags becoming detached and/or damaged. (00171b)

1. See Figure 3 and Figure 4. Install docking mount.
   a. Slide docking mount (4) on mounting bolt (5).
   b. Slide spacer (3) on mounting bolt.
   c. Apply threadlock to mounting bolt.
      LOCTITE 243 MEDIUM STRENGTH THREADLOCKER AND SEALANT (BLUE) (99642-97)
   d. Install mounting bolt through fender supports into fender mount. Tighten.
      Torque: 28–37 N·m (21–27 ft-lbs) *Saddlebag mounting*

bolt

2. See Figure 3. Install right side mounting bracket grommet.
   a. Seat the mounting bracket grommet (7) nubs with the holes on bracket (8).
   b. Apply threadlock to screw (9).
      LOCTITE 243 MEDIUM STRENGTH THREADLOCKER AND SEALANT (BLUE) (99642-97)
   c. Install screw. Tighten.
      Torque: 11–14 N·m (97–124 **in-lbs**) *Saddlebag right side mounting bracket grommet screw*
3. See Figure 4. Install left side mounting bracket grommet.
   a. Position mounting bracket (10) on frame (8).
   b. Apply threadlock to screw (11).
      LOCTITE 243 MEDIUM STRENGTH THREADLOCKER AND SEALANT (BLUE) (99642-97)
   c. Install screw. Tighten.
      Torque: 52–64 N·m (38–47 ft-lbs) *Saddlebag left side mounting bracket screw*
   d. Seat the mounting bracket grommet (7) nubs with the holes on mounting bracket.
   e. Apply threadlock to screw (9).
      LOCTITE 243 MEDIUM STRENGTH THREADLOCKER AND SEALANT (BLUE) (99642-97)
   f. Install screw. Tighten.
      Torque: 11–14 N·m (97–124 **in-lbs**) *Saddlebag left side mounting bracket grommet screw*
4. See Figure 1. Install saddlebag.
   a. Open saddlebag outer clamshell (3).
   b. Pull out and turn lock knob (4) to the unlocked position (5).
   c. See Figure 2. Place saddlebag mounting bracket (2) on mounting studs (3) while aligning the saddlebag docking rod (4) with the mounting bracket grommet (5). Slide saddlebag completely forward.
   d. See Figure 1. Rotate lock knob to the locked position (6) until a click is heard. Without pulling out on the knob, verify that knob cannot rotate back to the unlocked position.

      NOTE

      Indicator flag (1) is for showing when lock knob is unlocked only. Do not use indicator flag to lock or unlock saddlebag from motorcycle.

   e. See Figure 2. Verify the indicator flag is not showing and saddlebag is securely fastened.
   f. Pull saddlebag rearward to verify it is secure.
   g. Close saddlebag.

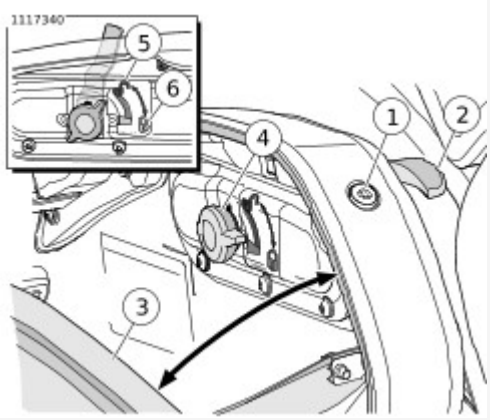

View interactive image

1	Lock
2	Latch lever
3	Outer clamshell
4	Lock knob
5	Unlocked position
6	Locked position

Figure 1. Saddlebag Lock Knob

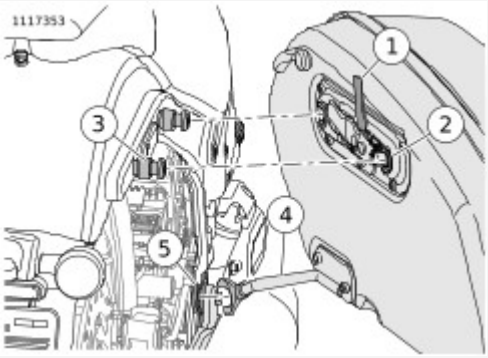

View interactive image

1	Indicator flag (unlocked position)
2	Mounting bracket
3	Mounting stud (2)
4	Docking rod
5	Mounting bracket grommet

Figure 2. Saddlebag Mounting Bracket

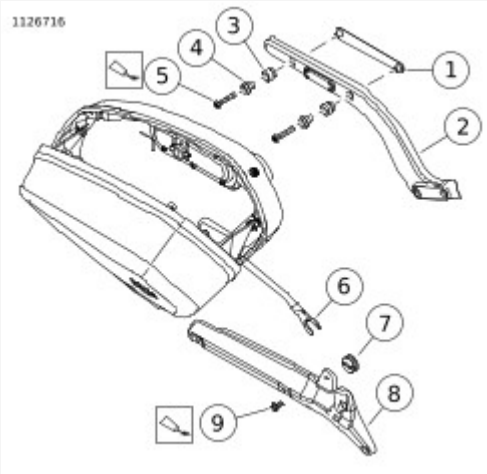

View interactive image

1	Fender mount
2	Fender support
3	Spacer
4	Docking mount
5	Mounting bolt
6	Docking rod
7	Mounting bracket grommet
8	Bracket
9	Screw

Figure 3. Right Side Quick Disconnect Saddlebag

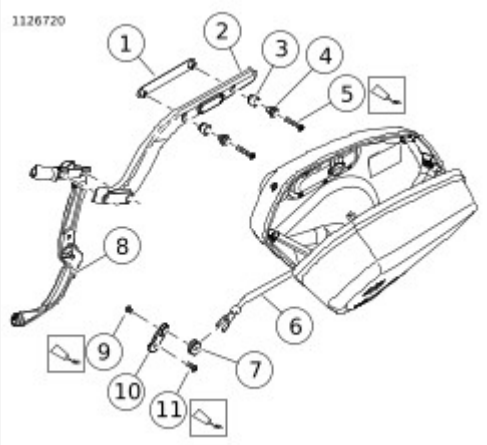

View interactive image

1	Fender mount
2	Fender support
3	Spacer
4	Docking mount
5	Mounting bolt
6	Docking rod
7	Mounting bracket grommet
8	Frame
9	Screw
10	Mounting bracket
11	Screw

Figure 4. Left Side Quick Disconnect Saddlebag

Disassemble

1. See Figure 1. Remove saddlebag lid.
   a. Open saddlebag lid (4).
   b. Remove screws (7) and tether bracket (14).
   c. Remove screws (8) and medallion (15).
   d. Remove saddlebag lid.
2. Remove reflector.
   a. Remove retainer clips (11).
   b. Remove reflector bracket (9) and reflector (10).
3. Remove lock assembly.
   a. Remove nut (6) and lockwasher (5).
   b. Remove lock (1), gasket (2) and bezel (3).
4. See Figure 3. Remove lockset.
   a. Place key in lock.
   b. Turn key half way between locked and open so the tumbler (3) shows in the access hole (2).
   c. Place a pin in the access hole. Press down the tumbler and slide out the lockset (4).
5. See Figure 1. Remove saddlebag gasket.
   a. Open saddlebag lid (4).
   b. Remove screws (7) from the tether bracket (14) and saddlebag lid.
   c. Completely remove gasket (13).

NOTE
Do not remove stitching.

Assemble

1. See Figure 2. Install saddlebag gasket.
   a. Align the new gasket (1) with the center of the tether (2) on the saddlebag lip.
   b. Press the gasket firmly onto saddlebag lip.
   c. Continue pressing gasket around saddlebag lip until gasket ends meet.
   d. Trim gasket to length and press onto lip.
   e. See Figure 1. Place tether bracket (14) beneath tether (12) and install screws (7) into bracket on the lid (4). Tighten.
      Torque: 0.9–1.6 N·m (8–14 **in-lbs**) *Saddlebag tether to lid screw*
2. See Figure 4. Install lockset.
   a. Place key in lockset (2).
   b. Align notches (1) on lockset as shown. Pull key out.

c. Align cam (6) and housing notches (5) in the open position as shown.

d. Verify the cam is in the open position by pressing down on the spring loaded lockset housing.

> **NOTE**
>
> If you can not press down on the spring loaded lockset housing the cam is in the locked position.

e. Align the lockset notches with the housing notches and slide together.

f. Verify the operation of the lock.

> **NOTE**
>
> In the locked position the lockset should not be able to be pressed in.

3. See Figure 1. Install lock assembly.
   a. Place bezel (3) through opening on saddlebag lid (4).
   b. Place gasket (2) on lock (1).
   c. Place lock through bezel.
   d. Place lockwasher (5) on bottom of bezel and install nut (6).
   e. Tighten nut.
      Torque: 5–6.2 N·m (44–55 **in-lbs**) *Saddlebag lockset nut*
4. Install reflector.
   a. Place reflector (10) and bracket (9) on saddlebag as shown.
   b. Install retainer clips (11).
5. Install saddlebag lid.
   a. Place medallion (15) on saddlebag lid (4).
   b. Align the holes on hinge with holes on lid.
   c. Install screws (8) through hinge and into medallion. Tighten.
      Torque: 2–2.8 N·m (18–25 **in-lbs**) *Saddlebag hinge screw*
   d. Place tether bracket (14) beneath tether (12) and install screws (7) into bracket on the lid. Tighten.
      Torque: 0.9–1.6 N·m (8–14 **in-lbs**) *Saddlebag tether to lid screw*

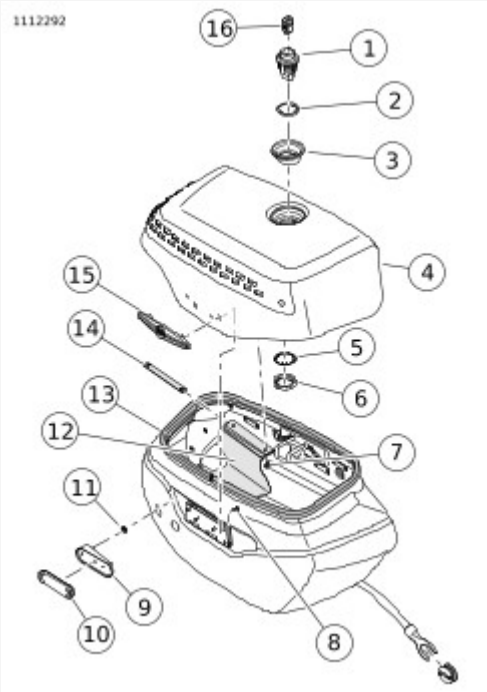

View interactive image

1	Lock
2	Gasket
3	Bezel
4	Saddlebag lid
5	Lockwasher
6	Nut
7	Screw (2)
8	Screw (4)
9	Reflector bracket
10	Reflector
11	Retainer clip (2)
12	Tether
13	Gasket
14	Tether bracket
15	Medallion
16	Lockset

Figure 1. Saddlebag Assembly

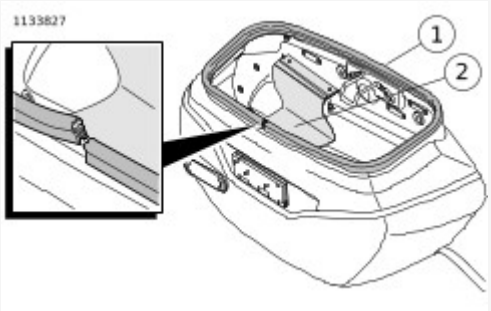

View interactive image

1	Gasket
2	Tether

Figure 2. Gasket Install

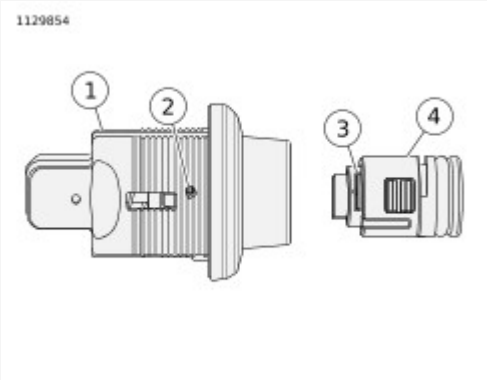

View interactive image

1	Housing
2	Access hole
3	Tumbler
4	Lockset

Figure 3. Lockset Removal

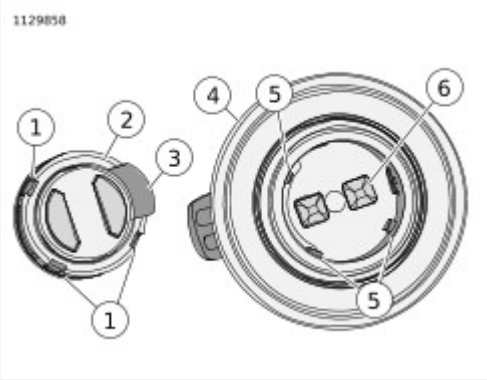

View interactive image

1	Lockset notch (3)
2	Lockset
3	Tumbler
4	Housing
5	Housing notch (3)
6	Cam

Figure 4. Lockset in Unlocked Position

Consumables

Description	Part Number	Size
LOCTITE 243 MEDIUM STRENGTH THREADLOCKER AND SEALANT (BLUE)	99642-97	6 ml (¼ fl oz)

Disassemble

1. See Figure 1. Remove outer clamshell.
   a. Open saddlebag.
   b. Pry out slightly on damper clip (9) on lower damper (1) while pulling damper from stud (7).

      NOTE

      Do not remove clip from damper.

   c. Remove two screws (4) attached to the outer clamshell (6).
   d. See Figure 2. If necessary remove gasket (2) from outer clamshell (1).
   e. Remove hinge screws (4) from outer clamshell.
   f. Remove outer clamshell.
2. See Figure 1. Remove damper.
   a. Pry out slightly on damper clip (9) on upper damper (1) while pulling damper from stud (7).

      NOTE

      Do not remove clip from damper.

   b. Remove damper (1).
3. Remove tether.
   a. Remove remaining screw (4) from inner clamshell (3).
   b. Remove studs (7).
   c. Remove tether (5).
4. See Figure 2. Remove strikes.
   a. Remove screws (9).
   b. Remove strikes (8).
5. Remove medallions. See Chassis → MEDALLIONS, BADGES, TANK EMBLEMS AND ADHESIVE STRIPS.
6. See Figure 3. Remove hinges.
   a. Remove screws (6).
   b. Remove hinges (7).
7. Remove docking rod.
   a. Remove docking rod screws (8).
   b. Remove docking rod (5).

8. Remove latch assembly.
   a. Remove screw (11).
   b. Remove latch lever (4) and O-ring (3) from inner clamshell (2).
   c. Remove screws (12) on front of latch.
   d. Remove latch assembly (1).
9. Remove lock.
   a. Place lock (10) in the unlocked position.
   b. Remove screws (9).
   c. Remove lock.
10. See Figure 4. Remove lock knob assembly.
   a. Remove screws (8) and indicator flag cover (9).
   b. Remove cap (17).
   c. Remove nut (16) and screw (7).
   d. Remove lock knob (15).
   e. Remove screws (1) and cover (13).
   f. Remove latching arm cover (10), spacer (4) and spring (5).
   g. Remove indicator flag (12) and latching arm (11) from latching arm cover.
   h. Remove grommets (6).
   i. Remove seals (14).
11. Remove Retaining clip.
   a. Pry center of clip (2) out.
   b. Remove clip.

Assemble

1. See Figure 2. Install strikes.
   a. Place strikes (8) on outer clamshell (1).
   b. Apply threadlocker to screws (9).
   LOCTITE 243 MEDIUM STRENGTH THREADLOCKER AND SEALANT (BLUE) (99642-97)
   c. Install screws. Tighten.
   Torque: 2.3–3.4 N·m (20–30 **in-lbs**) *Saddlebag strike screw*
2. Install medallions and reflectors.
   a. Clean mounting surface. See Chassis → MEDALLIONS, BADGES, TANK EMBLEMS AND ADHESIVE STRIPS
   b. With the adhesive backing still in place, test fit the medallions (10) and reflectors.
   c. Remove the adhesive backing.
   d. Install medallions and reflectors.
   e. Press firmly to make sure that there is good adhesion.
3. Install hinges.
   a. Position hinges (6) on outer clamshell (1).
   b. Apply threadlocker to screws (4).
   c. Install screws. Tighten.

Torque: 2.3–3.4 N·m (20–30 **in-lbs**) *Saddlebag hinge screw*

4. Install gasket.
   a. Clean gasket surface (3). See **Chassis → MEDALLIONS, BADGES, TANK EMBLEMS AND ADHESIVE STRIPS**.
   b. Trim gasket (2) to length.

NOTE
Do not stretch gasket. Gasket split (5) should be located on the bottom of clamshell.

   c. Install gasket at midpoint (7) of hinge area. Press gasket firmly in place.
5. See **Figure 4**. Install lock knob assembly.
   a. Install bushings (6) to latching arm cover (10).

NOTE
Grommet tabs must be fully seated.

   b. Replace seals (14) on locking knob cover (13).
   c. Place indicator flag (12) on latching arm (11) and slide through opening on latching arm cover.
   d. Place spring (5) and spacer (4) on latching arm.
   e. Place locking knob cover on inner clamshell (3) aligning the holes.
   f. Place locking knob cover (13) on inner clamshell.
   g. Install screws (1). Tighten.
      Torque: 11–14 N·m (97–124 **in-lbs**) *Saddlebag locking knob cover screw*
   h. Place pins on locking knob (15) into holes on latching arm.
   i. Install screw (7) through assembly and install **new** lock nut (16). Tighten.
      Torque: 11–14 N·m (97–124 **in-lbs**) *Saddlebag locking knob screw*
   j. Install cap (17).
   k. Place indicator flag cover (9) on latching arm cover.
   l. Apply threadlocker to screws (8).
   m. Install screws. Tighten.
      Torque: 2.7–4 N·m (24–35 **in-lbs**) *Saddlebag indicator flag cover screw*
   n. Verify operation.
6. Install retaining clips.
   a. Place **new** clips (2) in position and press in place.
7. See **Figure 3**. Install lock.
   a. Place lock (10) in the unlocked position.
   b. Place lock onto latch assembly (1).

NOTE

Lock pin should be toward inner clamshell.

c. Install screws (9). Tighten.
   Torque: 1.7–2.3 N·m (15–20 **in-lbs**) *saddlebag lock screw*
d. Verify lock installation.

8. Install latch assembly.
   a. Place latch (1) in position on inner clamshell (2).
   b. Install screws (12). Tighten.
      Torque: 1.7–2.3 N·m (15–20 **in-lbs**) *Saddlebag latch assembly*
   c. Place O-ring (3) on latch lever (4) and position on inner clamshell.
   d. Install screw (11). Tighten.
      Torque: 2.3–3.4 N·m (20–30 **in-lbs**) *Saddlebag latch lever screw*
9. Install docking rod.
   a. Place docking rod (5) on inner clamshell (2).
   b. Apply threadlocker to screws (8).
   c. Install screws. Tighten.
      Torque: 17–21 N·m (13–15 ft-lbs) *Saddlebag docking rod*
10. Install outer clamshell.
   a. Align outer clamshell with inner clamshell.
   b. Position outer clamshell hinges (7) in inner clamshell hinge slot.
   c. Apply threadlocker to screws (6).
   d. Install screws. Tighten.
      Torque: 2.3–3.4 N·m (20–30 **in-lbs**) *Saddlebag hinge screw*
   e. See **Figure 1**. Place tether (5) in position.
   f. Apply threadlocker to screws (4).
   g. Install screws.
      Torque: 5–6 N·m (44–53 **in-lbs**) *Saddlebag tether screw*
   h. Install studs (7).
      Torque: 5–6 N·m (44–53 **in-lbs**) *Saddlebag tether stud*
   i. Slide damper (1) through tether loop (2).

NOTE

Rod end of damper oriented toward outer clamshell.

   j. Press damper on studs to secure.
   k. Verify damper is secure.

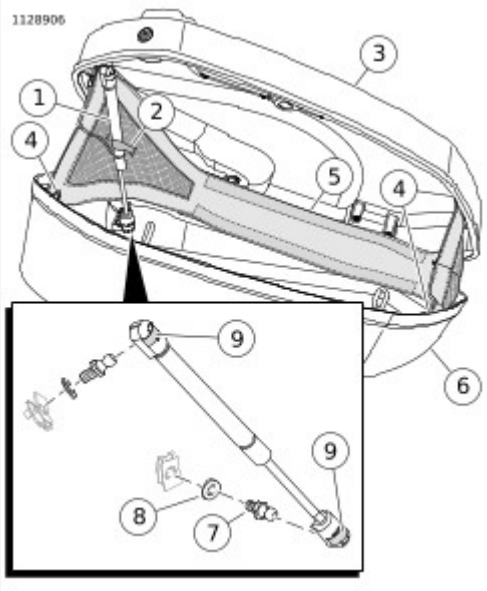

View interactive image

1	Damper
2	Tether loop
3	Inner clamshell
4	Screw (3)
5	Tether
6	Outer clamshell
7	Stud (2)
8	Washer (2)
9	Damper clip

Figure 1. Saddlebag Tether

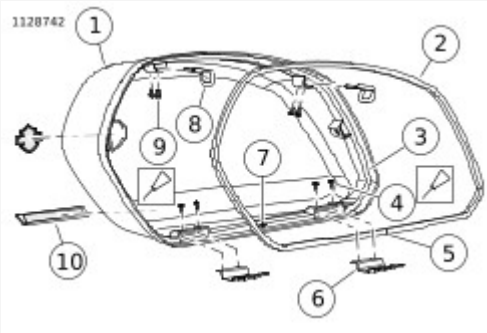

View interactive image

1	Outer clamshell

2	Gasket
3	Gasket surface
4	Hinge screw (4)
5	Gasket split
6	Hinge (2)
7	Gasket gap location
8	Strike (2)
9	Screw (4)
10	Medallions and reflectors (2)

Figure 2. Outer Clamshell Assembly

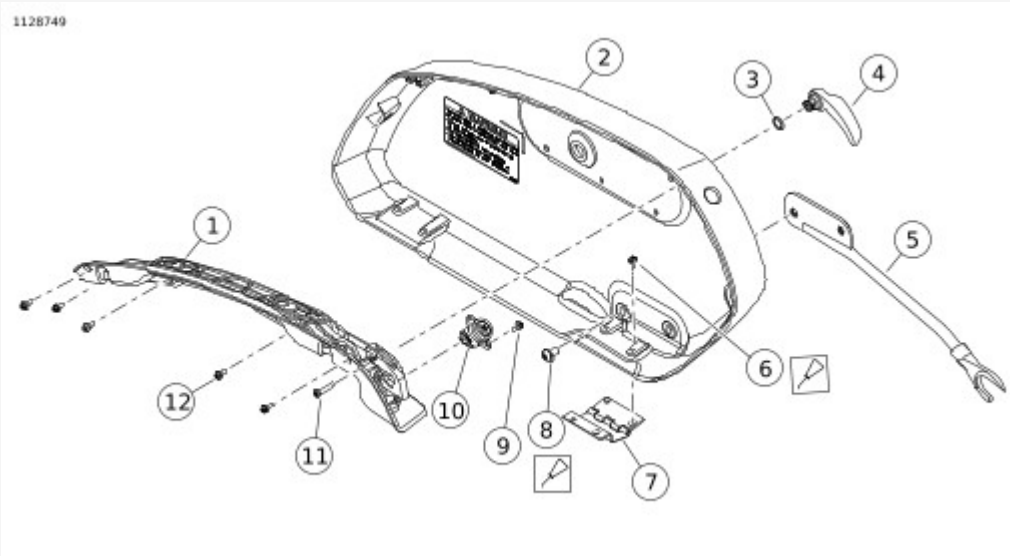

View interactive image

1	Latch assembly
2	Inner clamshell
3	O-ring
4	Latch lever
5	Docking rod
6	Hinge screw (4)
7	Hinge (2)
8	Screw (2)
9	Screw (2)

10	Lock
11	Screw (1)
12	Screw (5)

Figure 3. Latch Assembly

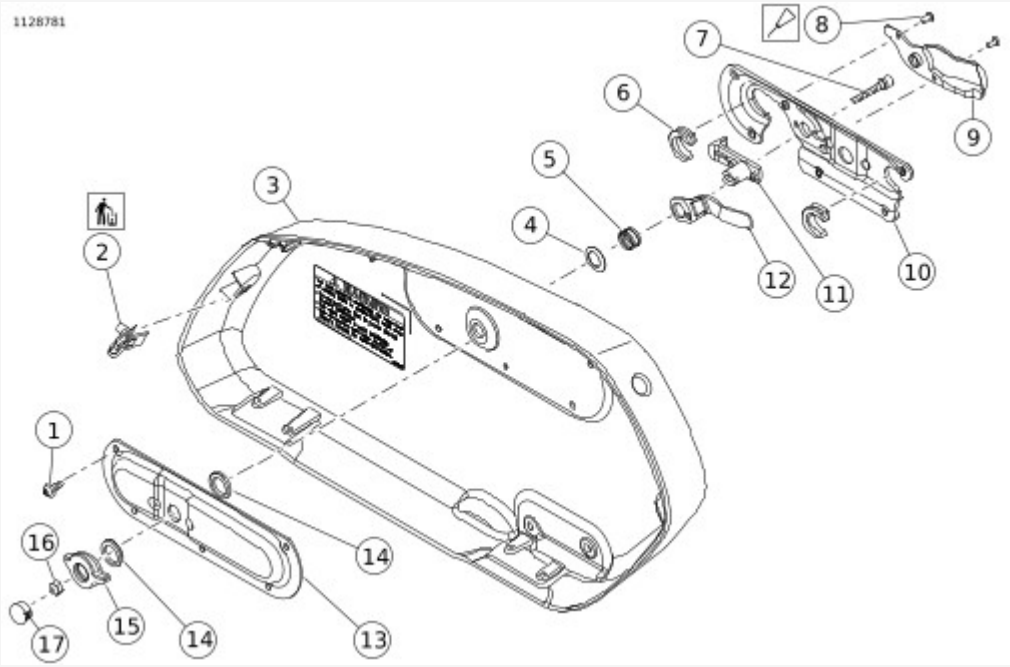

View interactive image

1	Screw (5)
2	Clip (5)
3	Inner clamshell
4	Spacer
5	Spring
6	Bushing (2)
7	Screw
8	Screw (2)
9	Indicator flag cover
10	Latching arm cover
11	Latching arm
12	Indicator flag
13	Locking knob cover

14	Seal (2)
15	Locking knob
16	Lock nut
17	Cap

Figure 4. Inner lock knob Assembly

Consumables

Description	Part Number	Size
3M GENERAL PURPOSE ADHESIVE REMOVER		-

1. Mark location of emblem with masking tape.
2. Remove emblem using fishing line or waxed dental floss.

NOTE
Wear protective gloves.

3. Remove remaining foam backing tape and adhesive from mounting surface.
   3M GENERAL PURPOSE ADHESIVE REMOVER ()

NOTE
▪ Do not clean with denatured alcohol, mineral spirits or other solvents. Damage to components may occur. ▪ For maximum bond, surface must be clean and dry.

4. Clean with a mixture of 50 percent isopropyl alcohol and 50 percent distilled water.

NOTE

- Apply in ambient temperatures between 21–38 °C (70–100 °F).
- Parts cannot be repositioned after initial installation. Do not remove protective film from adhesive until ready to apply.
- Do not bend emblem to fit contour of mounting surface.
- Allow at least 24 hours after application before exposing the area to vigorous washing, strong water spray or extreme weather.
- The adhesive bond will increase to maximum strength after about 72 hours at normal room temperature.

1. Test fit medallion.
   a. Check medallion against curve of mounting surface.
   b. Match left and right sides of fuel tank.
2. Remove protective film from back of medallion.

   NOTE

   - Protect adhesive from grease, oil, dust, dirt and fingerprints.
   - Once applied, do not shift medallion.

3. Apply even pressure across entire surface. Hold in place for 15 seconds.
4. Wait 20 minutes before touching medallion.

FASTENER	TORQUE VALUE	NOTES
Balancer bearing screw	9–12.4 N·m (80–110 **in-lbs**)	4.25 CRANKCASE, Repair Right Crankcase Half
Balancer bearing screw	9–12.4 N·m (80–110 **in-lbs**)	4.25 CRANKCASE, Repair Left Crankcase Half
Breather screw	10.2–13.6 N·m (90–120 **in-lbs**)	4.15 BREATHERS, Install
Cam chain tensioner fasteners	10.2–13.6 N·m (90–120 **in-lbs**)	4.22 CAM COMPARTMENT AND COMPONENTS, Install
Cam needle bearing installation maximum torque	33.9 N·m (25 ft-lbs)	4.22 CAM COMPARTMENT AND COMPONENTS, Camshaft Needle Bearings
Cam sprocket screw, alignment torque	20.3 N·m (180 **in-lbs**)	4.22 CAM COMPARTMENT AND COMPONENTS, Install *Used to check sprocket alignment.*
Cam sprocket screw, final torque	46.1 N·m (34 ft-lbs)	4.22 CAM COMPARTMENT AND COMPONENTS, Install
Cam support plate screws	10.2–13.6 N·m (90–120 **in-lbs**)	4.22 CAM COMPARTMENT AND COMPONENTS, Install *Follow procedure for proper tightening sequence.*
Camshaft cover screws	10.2–13.6 N·m (90–120 **in-lbs**)	4.22 CAM COMPARTMENT AND COMPONENTS, Remove and Install: Camshaft Cover
Camshaft sprocket screw, 1st torque	20.3 N·m (15 ft-lbs)	4.22 CAM COMPARTMENT AND COMPONENTS, Install *Apply LOCTITE 262 HIGH STRENGTH THREADLOCKER AND SEALANT (red)*
Camshaft timer cover screws	2.8–4 N·m (25–35 **in-lbs**)	4.22 CAM COMPARTMENT AND COMPONENTS, Remove and Install: Camshaft Cover
Crankcase oil check valve or plug with O-ring	24.4–29.8 N·m (18–22 ft-lbs)	4.10 OIL CHECK VALVE, Install
Crankcase oil check valve or plug with O-ring	24.4–29.8 N·m (18–22 ft-lbs)	4.25 CRANKCASE, Plugs and Oil Fittings
Crankcase screws, first torque	13.6 N·m (120 **in-lbs**)	4.25 CRANKCASE, Assemble
Crankcase screws, last torque	20.3–25.8 N·m (15–19 ft-lbs)	4.25 CRANKCASE, Assemble
Crankcase tapered plugs	13.6–16.3 N·m (120–144 **in-lbs**)	4.25 CRANKCASE, Plugs and Oil Fittings

Crankshaft sprocket screw, 1st torque	20.3 N·m (15 ft-lbs)	**4.22 CAM COMPARTMENT AND COMPONENTS, Install** *Apply LOCTITE 262 HIGH STRENGTH THREADLOCKER AND SEALANT (red)*
Crankshaft sprocket screw, final torque	32.5 N·m (24 ft-lbs)	**4.22 CAM COMPARTMENT AND COMPONENTS, Install**
Cylinder head nut torque step 1.	27.1–40.7 N·m (20–30 ft-lbs)	**4.19 CYLINDER HEADS, Install** *Apply ENGINE OIL to cylinder head bolt washers and threaded portion of the cylinder head bolts. See procedure for torque sequence.*
Cylinder head nut torque step 2. Loosen one turn.	-360° (-360°)	**4.19 CYLINDER HEADS, Install**
Cylinder head nut torque step 3.	12.2–14.9 N·m (9–11 ft-lbs)	**4.19 CYLINDER HEADS, Install**
Cylinder head nut torque step 4.	33.9–36.6 N·m (25–27 ft-lbs)	**4.19 CYLINDER HEADS, Install**
Cylinder head nut torque step 5. Tighten additional degree value.	90° (90°)	**4.19 CYLINDER HEADS, Install**
Cylinder stud	13.6–27.1 N·m (120–240 **in-lbs**)	**4.25 CRANKCASE, Cylinder Studs**
Cylinder temperature sensor	13.6–20.3 N·m (120–180 **in-lbs**)	**4.19 CYLINDER HEADS, Assemble**
Engine mount bolt, front, lower	67.8–74.5 N·m (50–55 ft-lbs)	**4.12 FRONT ENGINE MOUNT, Remove and Install: Lower Front Engine Mount**
Engine mount pinch bolt, front, lower	10.2–12.2 N·m (8–9 ft-lbs)	**4.12 FRONT ENGINE MOUNT, Remove and Install: Lower Front Engine Mount**
Engine mount screw, front, upper engine bracket	61–67.8 N·m (45–50 ft-lbs)	**4.12 FRONT ENGINE MOUNT, Remove and Install: Upper Front Engine Mount**
Engine mount screw, front, upper frame bracket	61–67.8 N·m (45–50 ft-lbs)	**4.12 FRONT ENGINE MOUNT, Remove and Install: Upper Front Engine Mount**
Engine mount screw, front, upper frame bracket-to-engine bracket	61–67.8 N·m (45–50 ft-lbs)	**4.12 FRONT ENGINE MOUNT, Remove and Install: Upper Front Engine Mount**
Engine mount screw, left side, bracket-to-frame	61–67.8 N·m (45–50 ft-lbs)	**4.13 LEFT SIDE ENGINE MOUNT, Install**
Engine mount screw, left side, bracket-to-head	38–44.7 N·m (28–33 ft-lbs)	**4.13 LEFT SIDE ENGINE MOUNT, Install**
Engine oil drain plug	19–28.5 N·m (14–21 ft-lbs)	**4.27 OIL PAN, Install**
Knock sensor screw	17.6–23 N·m (13–17 ft-lbs)	**4.19 CYLINDER HEADS, Assemble**

Lifter anti-rotation device screw	10.2–13.6 N·m (90–120 **in-lbs**)	**4.18 PUSHRODS, LIFTERS AND COVERS, Install**
Lifter cover screws	14.9–17.6 N·m (132–156 **in-lbs**)	**4.18 PUSHRODS, LIFTERS AND COVERS, Install**
Lower rocker cover screws	10.2–13.6 N·m (90–120 **in-lbs**)	**4.16 LOWER ROCKER COVERS, Install**
Lower rocker cover stud	10.2–13.6 N·m (90–120 **in-lbs**)	**4.14 UPPER ROCKER COVERS, Install** *Apply LOCTITE 243 MEDIUM STRENGTH THREADLOCKER AND SEALANT (blue) to screws.*
Oil cooler cover bracket screw, FXDRS	17.6–21.7 N·m (13–16 ft-lbs)	**4.9 OIL COOLER, Install**
Oil cooler cover screw, all but FXDRS	9.5–11.5 N·m (7–8 ft-lbs)	**4.9 OIL COOLER, Install**
Oil cooler cover screws, FXDRS	32.5–39.3 N·m (24–29 ft-lbs)	**4.9 OIL COOLER, Install**
Oil cooler screw	9.5–11.3 N·m (84–100 **in-lbs**)	**4.9 OIL COOLER, Install**
Oil line manifold screws	10.2–13.6 N·m (90–120 **in-lbs**)	**4.11 OIL COOLANT LINES, Install** *Apply LOCTITE 243 MEDIUM STRENGTH THREADLOCKER AND SEALANT (BLUE)*
Oil pan fasteners	14.9–17.6 N·m (132–156 **in-lbs**)	**4.27 OIL PAN, Install** *Torque sequence; LOCTITE 243 MEDIUM STRENGTH THREADLOCKER AND SEALANT (blue) with used fasteners*
Oil pump screws, 1st torque	1.4–6.8 N·m (12–60 **in-lbs**)	**4.22 CAM COMPARTMENT AND COMPONENTS, Install** *Follow procedure for proper tightening sequence.*
Oil pump screws, final torque	10.2–13.6 N·m (90–120 **in-lbs**)	**4.22 CAM COMPARTMENT AND COMPONENTS, Install** *Follow procedure for proper tightening sequence.*
Piston jet screws	2.8–3.9 N·m (25–35 **in-lbs**)	**4.25 CRANKCASE, Repair Right Crankcase Half**
Rocker shaft screw	31.2–36.6 N·m (23–27 ft-lbs)	**4.17 ROCKER ARMS, Install**
Spark plug	10–15 N·m (89–133 **in-lbs**)	**4.7 TROUBLESHOOTING, Compression Test**
Transmission drain plug	19–28.5 N·m (14–21 ft-lbs)	**4.27 OIL PAN, Install**

Upper rocker cover screws	13.6–15.8 N·m (120–140 **in-lbs**)	**4.14 UPPER ROCKER COVERS, Install** *Apply LOCTITE 243 MEDIUM STRENGTH THREADLOCKER AND SEALANT (blue) to screws.*

Table 1. Engine: Milwaukee-Eight™ 107 Engine

ITEM	SPECIFICATION	
Number of cylinders	2	
Type	4-cycle, 45 degree V-Type, oil-cooled Single camshaft Dual balance shafts	
Compression ratio	10.0:1	
Bore	3.937 in	100 mm
Stroke	4.375 in	111.1 mm
Displacement	107 in³	1753 cm³
Fuel requirement	Premium unleaded	
Lubrication system	Pressurized, dry sump with oil cooler	

Table 2. Engine: Milwaukee-Eight™ 114 Engine

ITEM	SPECIFICATION	
Number of cylinders	2	
Type	4-cycle, 45 degree V-Type, oil-cooled Single camshaft Dual balance shafts	
Compression ratio	10.5:1	
Bore	4.016 in	102 mm
Stroke	4.500 in	114.3 mm
Displacement	114 in³	1868 cm³
Fuel requirement	Premium unleaded	
Lubrication system	Pressurized, dry sump with oil cooler	

Table 3. Engine Idle Characteristics

CONDITION	DOM *	ALL OTHERS *
Cold start	1450 rpm	1700 rpm
Hot idle	850 rpm	850 rpm

Hot idle; EITMS engaged	950 rpm	950 rpm
Low voltage	200 rpm increase from normal	
* All values are approximate		

Table 4. Oiling System

ITEM	SPECIFICATION
Capacity with filter	Air-Cooled (new system): 4.7 L (5 qt)
	Service oil change (initial fill): 3.8 L (4 qt)
Recommended oil	Genuine Harley-Davidson H-D 360 Motorcycle Oil
Pump	Twin gerotor, dual scavenge, crank mounted and driven, internal oil pump, dry sump
Pressure	242–310 kPa (35–45 psi) at 2000 RPM and normal operating temperature of 110 °C (230 °F)
Filtration	5 micron media, filtered between pump and engine
Cooling	Oil cooler

Table 5. Rocker Arms Specifications

ROCKER ARMS	IN	MM
Shaft fit in bushing (loose)	0.0005-0.0022	0.013-0.056
End clearance	0.004-0.015	0.10-0.38

Table 6. Rocker Arm Shaft Specifications

ROCKER ARM SHAFTS	IN	MM
Diameter	0.5538-0.5543	14.067-14.079

Table 7. Hydraulic Lifter Specifications

HYDRAULIC LIFTERS	IN	MM
Fit in crankcase (loose)	0.0009-0.0026	0.023-0.066

Table 8. Cylinder Head Specifications

CYLINDER HEAD	IN	MM
Head gasket surface (flatness)	0-0.003	0-0.08

Table 9. Valve Specifications

VALVES	IN	MM
Exhaust: fit in guide	0.001-0.003	0.0254-0.0762
Intake: fit in guide	0.001-0.003	0.0254-0.0762
Seat width	0.040-0.080	1.02-2.03
Stem protrusion from cylinder head boss	1.714-1.721	43.54-43.71
Valve lash *	0.000-0.003	0.00-0.08
* Variation between valve pairs operated by a common rocker arm.		

Table 10. Valve Spring Specifications

VALVE SPRINGS	IN	MM
Closed	63 lbs @ 1.535 in.	280 N @ 39.0 mm
Open	165 lbs @ 1.154 in.	735 N @ 29.3 mm
Free length	1.838 in.	46.69 mm

Table 11. Piston

PISTON		IN	MM
Fit in cylinder		0.0025-0.0036	0.064-0.091
Piston pin fit (loose)		0.0002-0.0005	0.005-0.013
Ring end gap	Top compression	0.010-0.016	0.25-0.40
	2nd compression	0.016-0.024	0.40-0.60
	Oil control ring	0.008-0.028	0.20-0.70
Ring side clearance	Top compression	0.0012-0.0027	0.030-0.068
	2nd compression	0.0012-0.0027	0.030-0.068
	Oil control rails	0.001-0.007	0.025-0.178

Table 12. Connecting Rod Specifications

CONNECTING ROD	IN	MM
Piston pin fit (loose)	0.0007-0.0012	0.018-0.030
Side play between flywheels	greater than 0.005	greater than 0.13

Table 13. Flywheel Specifications

FLYWHEELS	IN	MM
Runout (shaft measured in case)	0.000-0.010	0.0-0.254
Runout (measured in truing stand)	0.000-0.004	0.0-0.102
End play	0.003-0.013	0.076-0.330

Table 14. Crankshaft/Sprocket Shaft Bearing Specifications

CRANKSHAFT/SPROCKET SHAFT BEARINGS	IN	MM
Roller bearing fit (loose)	0.0002-0.0015	0.005-0.038
Bearing fit in crankcase (tight)	0.0038-0.0054	0.097-0.137
Bearing inner race on crankshaft (tight)	0.0004-0.0014	0.010-0.036

Wear limits are given here as a guideline for measuring used engine components. Replace components when they exceed these values.

Table 1. Rocker Arm/Rocker Arm Shaft

ROCKER ARM/ROCKER ARM SHAFT	REPLACE IF WEAR EXCEEDS	
	IN	MM
Shaft fit in bushing	0.006	0.152
End clearance	0.025	0.635

Table 2. Hydraulic Lifter

HYDRAULIC LIFTER	REPLACE IF WEAR EXCEEDS	
	IN	MM
Fit in crankcase	0.006	0.152
Roller fit	0.0015	0.038
Roller end clearance	0.022	0.559

Table 3. Cam Support Plate

ITEM	REPLACE IF WEAR EXCEEDS	
	IN	MM
Cam chain tensioner shoe thickness	0.060 min.	1.52 min.
Crankshaft bore maximum ID	0.8545	21.704
Camshaft bore	1.1023	27.998
Flatness	0.010	0.25

Table 4. Oil Pump

OIL PUMP	REPLACE IF WEAR EXCEEDS	
	IN	MM
Rotor tip clearance	0.004	0.10
Rotor thickness variation	0.001	0.025

Table 5. Cylinder Head

CYLINDER HEAD	REPLACE IF	
	IN	MM
Valve seat width (max)	0.080	2.03
Valve margin (min)	0.031	0.80
Valve stem protrusion (max)	1.752	44.50
Cylinder head warpage (max)	0.006	0.152
Valve lash (max) *	0.008	0.20
* Variation between valve pairs operated by a common rocker arm.		

Table 6. Valve Stem to Guide

VALVE STEM TO GUIDE	REPLACE IF WEAR EXCEEDS	
	IN	MM
Intake	0.0038	0.0965
Exhaust	0.0038	0.0965

Table 7. Valve Springs

VALVE SPRINGS	IN	MM
Closed	56.8-66.1 lbs @ 1.154 in	253-294 N @ 29.3 mm
Open	150.0-172.7 lbs @ 1.091 in	667-768 N @ 27.70 mm
Free length	1.838 in	46.70 mm

Table 8. Cylinder

CYLINDER	REPLACE IF WEAR EXCEEDS	
	IN	MM
Warpage of gasket surface: top	0.006	0.152
Warpage of gasket surface: base	0.004	0.102

Table 9. Piston

PISTON	REPLACE IF WEAR EXCEEDS	
	IN	MM

Fit in cylinder (loose)		0.0041	0.104
Piston pin fit (loose)		0.0008	0.020
Ring end gap	Top compression	0.020	0.508
	Second compression	0.030	0.762
	Oil control rails	0.050	1.27
Ring side clearance	Top compression	0.004	0.102
	Second compression	0.004	0.102
	Oil control rails	0.010	0.254

Table 10. Connecting Rod

CONNECTING ROD	REPLACE IF WEAR EXCEEDS	
	IN	MM
Piston pin fit (loose)	0.002	0.051

Table 11. Flywheel

FLYWHEEL	REPLACE IF WEAR EXCEEDS	
	IN	MM
Runout (shaft measured in case)	0.012	0.305
Runout (measured in truing stand)	0.005	0.127
End play	0.013	0.330

Table 12. Crankshaft Roller Bearing

CRANKSHAFT ROLLER BEARING	REPLACE IF	
	IN	MM
Roller bearing fit (loose)	More than 0.0015	More than 0.038
Bearing fit in crankcase (tight)	Less than 0.0038	Less than 0.097
Inner race on crankshaft (tight)	Less than 0.0004	Less than 0.010

Milwaukee-Eight engines are dry sump engines meaning that they have external oil reservoirs. Air cooled engines have an oil cooler and circulate oil between the exhaust ports for additional heat control.

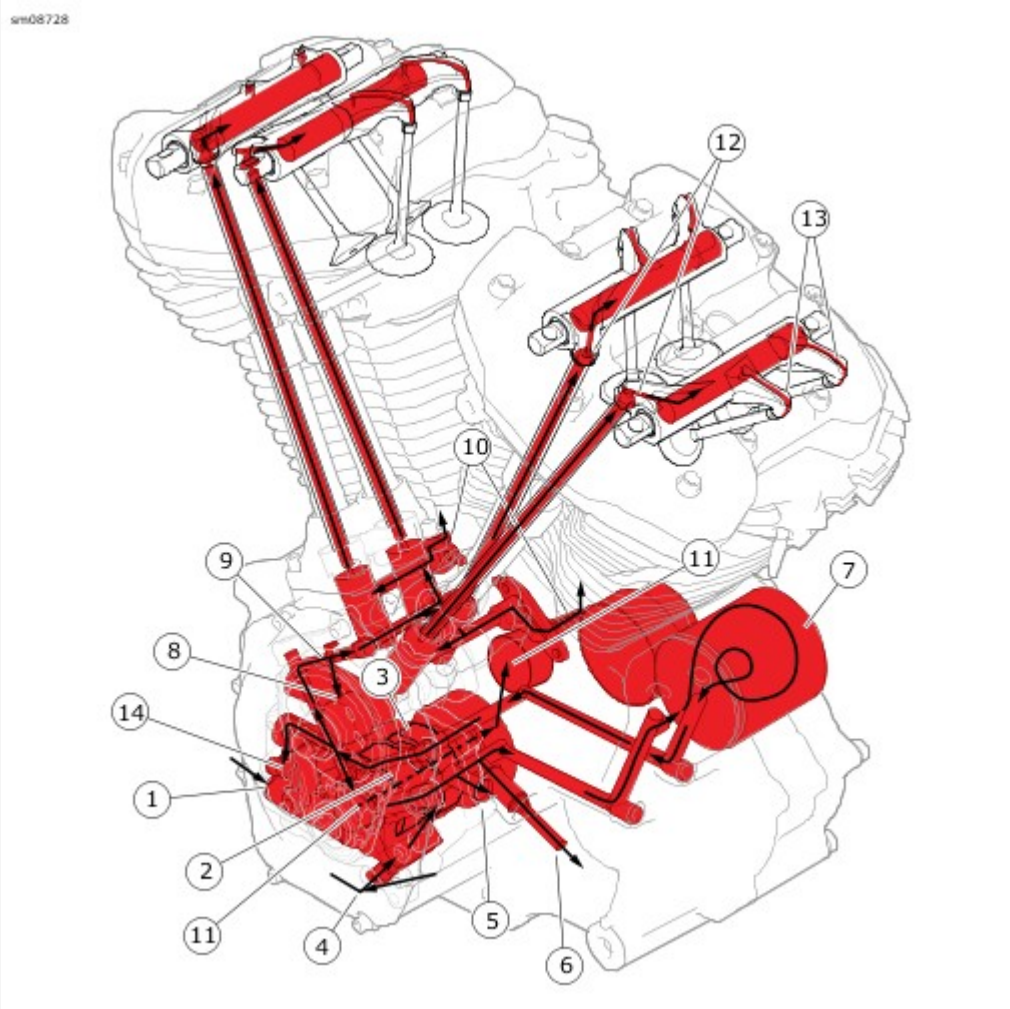

View interactive image

1	Oil in from oil pan
2	Oil pump feed rotors
3	Oil pump scavenge rotors
4	Scavenge oil in from cam chest
5	Oil pressure switch
6	Oil out to oil cooler (oil cooled only)
7	Oil filter
8	Cam plain bearing
9	Oil to camshaft, lifters and piston jets
10	Piston jets
11	Oil through crankshaft to crankpin and rod bearings

12	Oil through pushrods to rocker arms
13	Oil spillover to lubricate valve stems
14	Hydraulic chain tensioner

Figure 1. Internal Engine Oil Flow

Internal Oil Distribution: All

1. See Figure 1.
   a. Oil from the oil pan (1) is pulled through ports in the oil pan (not shown), the transmission housing and crankcase
   b. Oil enters the oil pump feed gerotors.
   c. Oil exits the pump and passes oil pressure switch (5) and oil cooler port (6) headed to oil filter (7). Oil cooler port is plugged on Twin-Cooled engines.
   d. Oil exits filter and is directed back into cam support plate where its split between crankshaft, hydraulic chain tensioner (14), and lifters (9).
   e. Crankshaft oil travels through crankshaft to the crankpin and rod bearings (11).
   f. Flow toward lifters splits to cam plain bearing (8), lifters and on to piston jets (10).
   g. Oil flows from lifters up through pushrods to rocker arms (12).
   h. Oil exits rocker arms to lubricate valve stems via spillover (13).
   i. Oil drains through passages in the heads and cylinders back to the camchest cavity. Residual oil in the camchest cavity and the crankcase cavity is picked up by the scavenge port (4) in the pump. Return oil is fed through the scavenge gerotors and case passages back to the oil pan.
   j. Main bearings, balancer bearing and left cam bearing are lubricated by oil splash.

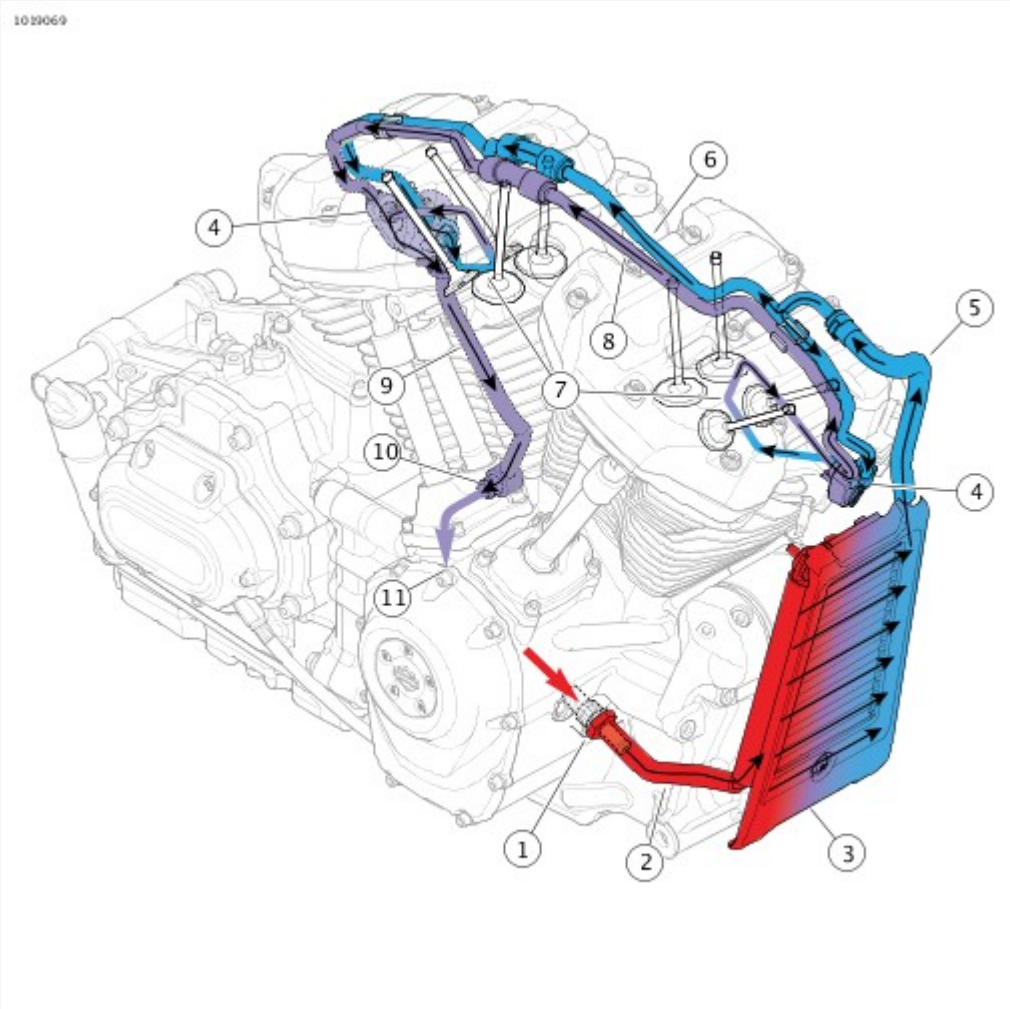

View interactive image

1	Oil out check valve
2	Hose, engine to oil cooler
3	Oil cooler
4	Manifold
5	Hose, oil cooler to supply line
6	Supply oil line
7	Passages around exhaust ports
8	Return oil line
9	Oil return line to transmission
10	Connection to engine oil passage in transmission
11	Return oil to oil pan

Figure 2. External Engine Oil Flow: Air Cooled

External Oil Distribution: Air Cooled Only

1. See Figure 2.
   a. Pressurized oil exits crankcase and flows through check valve (1), hose (2) to oil cooler (3).
   b. Oil flows through oil cooler, hose (5) to oil supply line (6).
   c. Oil flow splits at oil supply line (6) and flows to manifolds (4).
   d. Oil flows through passages between the exhaust ports (7) in cylinder heads and back to manifolds.
   e. Oil flows through return line (8) to return oil line to transmission (9).
   f. Return fitting (10) connects to a passage in transmission where it returns to the oil pan (11).

See **Figure 1**. The oil pump has two gerotor gear sets driven by the crankshaft.

- The feed gerotor set distributes oil to the engine.
- The scavenge gerotor set draws oil from the cam and flywheel compartments and returns it to the oil pan.

Each gerotor gear set has an inner and outer gerotor. The inner and outer gerotors have fixed centers that are slightly offset to one another. Also, the inner gerotor has one less tooth.

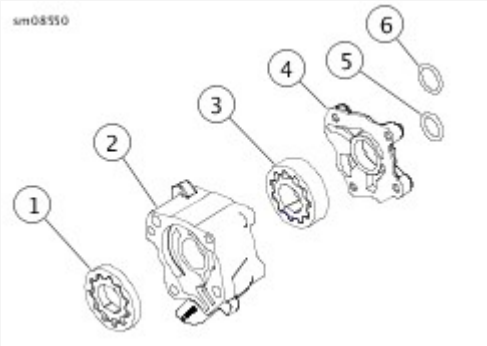

View interactive image

1	Feed gerotor
2	Housing
3	Scavenge gerotor
4	Inner cover
5	Scavenge port O-ring
6	Feed port O-ring

Figure 1. Oil Pump

The oil pump is driven by the crankshaft. The inlet and outlet sides of the pump are sealed by the tips and lobes of the inner and outer gerotors. This prevents oil on the outlet side (high pressure) from being transferred to the inlet side.

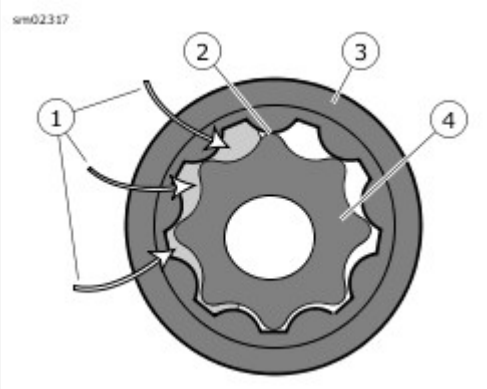

View interactive image

1	Oil in
2	Seal
3	Outer gerotor
4	Inner gerotor

Figure 1. Inlet Side Oil Flow

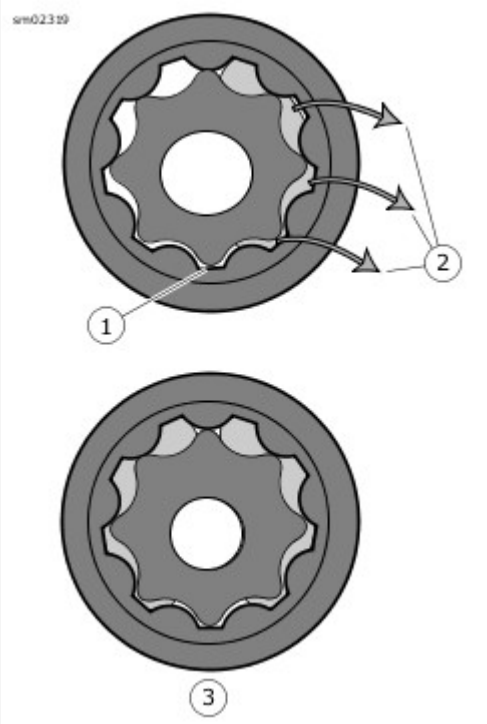

View interactive image

1	Seal
2	Oil out
3	Continuous flow

Figure 2. Outlet Side Oil Flow

See **Figure 1**. As the gerotors rotate, the cavity volume increases between the inner and outer gerotors on the inlet side of the pump. This creates a vacuum causing oil to be drawn in. The cavity increases until the volume is equivalent to that of the missing tooth on the inner gerotor.

See **Figure 2**. As the oil moves to the outlet side of the pump, the cavity decreases in volume. This forces pressurized oil out the discharge port. In operation, the gerotors provide a continuous flow of oil.

A breather assembly is mounted to each cylinder head to prevent a buildup of pressure caused by the downward force of the pistons. Burning crankcase vapor eliminates the pollutants normally discharged from the crankcase.

See **Figure 1**. As pistons push downward, displaced air in the crankcase is vented through the crankshaft roller bearing into the cam compartment. The air flows up the pushrod covers (1) into the rocker housing. The moving air absorbs a small amount of oil vapor as it travels through the engine.

The oil/air vapor passes through an opening in the breather assembly (3).

In the breather assembly, the flow of air passes downward through a labyrinth where most of the oil is separated from the air. It then moves upward through the breather element (4) where the remaining oil is removed. Two small holes in the bottom of the breather housing allow the separated oil to drain back into the crankcase.

Passing through the breather element, the vapor passes through the umbrella valve (2). Vapor passes down into the cylinder head passageway and through the breather bolt (5). It passes through a breather tube (6) into the air filter element where it combines with the intake air stream and is burned during normal combustion.

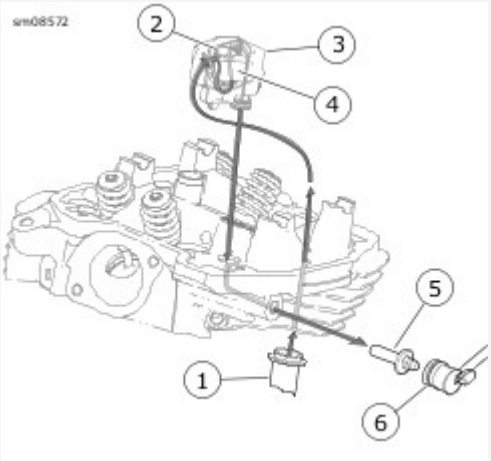

View interactive image

1	Pushrod cover
2	Umbrella valve
3	Breather assembly
4	Breather element
5	Breather bolt
6	Breather tube

Figure 1. Breather Air Flow

See **Figure 1**. The red OIL PRESSURE indicator lamp illuminates to indicate improper pressure of the engine oil. The lamp illuminates when the ignition is initially turned on (before the engine is started), but should extinguish once the engine is running.

NOTICE

If the oil pressure indicator lamp remains lit, always check the oil supply first. If the oil supply is normal and the lamp is still lit, stop the engine at once and do not ride further until the trouble is located and the necessary repairs are made. Failure to do so may result in engine damage. (00157a)

If the indicator lamp does not extinguish, it may be caused by low oil level or diluted oil supply. In freezing weather, the oil feed and return lines can clog with ice or sludge. Other conditions that may cause the lamp to remain lit are:

- Faulty lamp wiring
- Faulty oil pressure sending unit
- Damaged oil pump
- Plugged oil filter element
- Incorrect oil viscosity for the operating temperature
- Fractured or weak spring in the oil pressure relief valve
- Incorrectly installed O-rings in the engine

To troubleshoot the problem, always check the engine oil level first. If the oil level is OK, determine if oil returns to the oil pan. If oil does not return, shut off the engine until the problem is located and corrected.

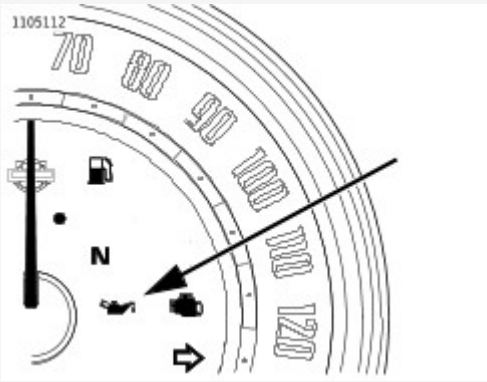

View interactive image

Figure 1. Oil Pressure Indicator Lamp (Typical)

Special Tools

Description	Part Number	Qty.
OIL PRESSURE TEST GAUGE KIT	HD-96921-52D	1

1. Verify that engine oil is at the proper level. See **Maintenance → REPLACE ENGINE OIL AND FILTER**.
2. Run motorcycle until engine oil reaches at least 93.5 °C (200 °F). Stop engine.
3. Remove oil pressure switch from crankcase. See **Electrical → OIL PRESSURE SWITCH**.
4. See **Figure 1**. Install **OIL PRESSURE TEST GAUGE KIT (Part Number:HD-96921-52D)**.
   a. Hand-tighten adapter HD-96921-106 (2) in oil pressure switch mounting hole.
   b. Assemble banjo bolt (3), washer (4), oil pressure gauge (1), banjo fitting and second washer onto adapter. Hand-tighten.
5. Check oil pressure.
   a. Operate engine at various speeds.
   b. Record results.
   c. Stop engine.
6. Remove oil pressure gauge assembly.
7. Install oil pressure switch. See **Electrical → OIL PRESSURE SWITCH**.
8. Verify that oil pressure is within specifications. Refer to **Table 1**.

Table 1. Oil Pressure

CHECK	SPECIFICATION *	
	SAE	METRIC
Oil pressure - min at idle	5 psi	34.5 kPa
Oil pressure - normal at 2000 rpm	35-45 psi	242-310 kPa
Oil pressure - max	50 psi	345 kPa
* With oil at normal operating temperature of 110 °C (230 °F)		

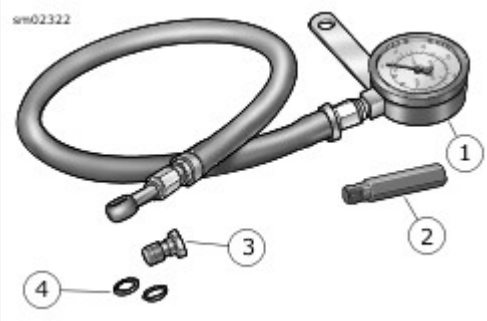

View interactive image

1	Gauge
2	Adapter
3	Banjo bolt

4	Washer (2)

Figure 1. Oil Pressure Gauge Set

Typical Symptoms

Symptoms indicating a need for engine repair are often misleading. If more than one symptom is present, possible causes can be narrowed to make at least a partial diagnosis.

For example, an above normal consumption of oil could be caused by several mechanical faults. However when accompanied by blue-gray smoke from the exhaust and low compression, it indicates the rings need replacing. Low compression by itself is more likely to be caused by improperly seated or burned valves, not worn rings.

Certain knocking noises may occur because of loose bearings, others by piston slap. Piston slap is a condition where piston or cylinder or both are out of tolerance. This excessive clearance allows the piston to slap the cylinder as it moves up and down.

Most frequently, valves, rings, pins, bushings and bearings need attention at about the same time. If the symptoms indicate that any one of the above components is worn, service all related parts.

Special Tools

Description	Part Number	Qty.
CYLINDER COMPRESSION GAUGE	HD-33223-1	1
BORESCOPE	HD-50549	1

Check for cylinder leakage with a compression test. Use **CYLINDER COMPRESSION GAUGE (Part Number:HD-33223-1)** with a screw-in type adapter.

1. Remove all spark plug cables.
2. Remove one spark plug from each cylinder.

> **NOTE**
>
> Never use a metal object to hold the throttle plate open.

3. Open throttle plate.
   a. Remove air cleaner cover and filter. See **Maintenance → INSPECT AIR FILTER**.
   b. Disconnect TCA connector [211] from the induction module.
   c. Insert a 19 mm (0.75 in) diameter by 30.5 cm (12 in) long wooden or nylon dowel to hold the throttle valve open.
4. Test compression.
   a. Connect compression tester to front cylinder following manufacturer's instructions.
   b. Crank engine continuously through 5-7 full compression strokes.
   c. Note gauge readings at the end of the first and last compression strokes. Record test results.
   d. Disconnect ACR and repeat test.
   e. Connect ACR.
   f. Repeat steps (a-e) on rear cylinder.
5. Compare with specifications. Refer to **Table 1**
   a. If compression is within specifications and the variance between cylinders is less than 10%, compression is normal.
   b. If readings do not meet specifications, inject 15 ml (0.5 fl oz) engine oil into each cylinder and repeat the compression tests on both cylinders. Readings that are considerably higher during the second test indicate worn piston rings.
   c. Refer to **Table 2** for possible causes of low compression.
   d. Inspect cylinder using borescope. Refer to **Engine → CYLINDERS → Clean and Inspect** for more detail.

      Special Tool: **BORESCOPE** (HD-50549)
6. Remove dowel from induction module.
7. Connect TCA connector.
8. Assemble the air cleaner. See **Maintenance → INSPECT AIR FILTER**.

9. Install the spark plugs. Connect spark plug wires.
   Torque: 10–15 N·m (89–133 **in-lbs**) *Spark plug*

Table 1. Compression Specifications

ACR STATUS	PSI	KPA
ACR connected	90 (min)	621 (min)
ACR disconnected	175 (min)	1207 (min)

Table 2. Compression Test Results

TEST RESULTS	DIAGNOSIS
▪ Compression low on first stroke. ▪ Compression builds on the following strokes, but does not reach normal. ▪ Improves considerably when oil is added to cylinder.	- Ring trouble
▪ Compression low on first stroke. ▪ Compression does not build much on following strokes. ▪ Does not improve considerably with the addition of oil.	- Head gasket leak - Incorrect valve lash - Valve trouble

Special Tools

Description	Part Number	Qty.
CYLINDER LEAKDOWN TESTER	HD-35667-A	1
BORESCOPE	HD-50549	1
CRANKSHAFT LOCKING TOOL	HD-52252	1

1. Verify that the leakdown tester is free from leakage.

   Special Tool: **CYLINDER LEAKDOWN TESTER** (HD-35667-A)

   a. Apply a soap/water solution around all tester fittings.
   b. Connect cylinder leakdown tester to compressed air source.
   c. Bubbles indicate leakage.

2. **NOTE**

   Perform the test with the ignition switch turned OFF.

   Remove one spark plug per cylinder.

3. Set piston in the cylinder being tested at top dead center (TDC) of compression stroke (both valves closed).

4. **NOTE**

   Never use **CRANKSHAFT LOCKING TOOL (Part Number:HD-52252)** for procedures such as servicing the compensator, servicing the clutch or servicing the camshaft. Crankcase damage will result.

   Lock the crankshaft.

   a. Remove CKP. See **Electrical → CRANKSHAFT POSITION SENSOR (CKP)**.
   b. Install crankshaft locking tool.

      Special Tool: **CRANKSHAFT LOCKING TOOL** (HD-52252)

5. Follow the manufacturer's instructions to perform the leakdown test.
   a. Record the percent of leakage.
   b. Listen for air leaks at throttle body, exhaust pipe, oil fill spout and head gasket.
6. Verify that the piston is still at TDC. Repeat the test if it moved.
7. Results:
   a. Leakage greater than 25 percent indicates that further diagnosis is warranted.
   b. Air escaping through the throttle body indicates leaking past intake valves.
   c. Air escaping through the exhaust pipe indicates leaking past

exhaust valves.

d. Air sound from the oil fill spout indicates leaking past piston rings.

e. Inspect cylinder using borescope. Refer to **Engine → CYLINDERS → Clean and Inspect** for more detail.

   Special Tool: **BORESCOPE** (HD-50549)

8. Remove crankshaft locking tool.

Crankshaft Installed

NOTE

- Perform the following checks during engine disassembly as a method to determine condition of crankshaft and whether crankshaft is suitable for reuse. The checks can be done with the engine either installed in the frame or removed.
- Dial indicators must be set up and zeroed **perpendicular to the shaft in both directions**. The indicator must be 90 degrees when viewed from the end and from the side.
- For a reliable reading, only measure on the cam support plate bushing machined surface of the crankshaft, never on a shaft adapter or the bolt holes.
- Never secure the dial indicator base to the vehicle frame. Movement within the engine mounts will result in a false reading.
- While rotating the crankshaft, the indicator needle may move to both the minus and plus sides of zero. The total indicator reading is the value to record.

1. **Right Side**
   a. Remove spark plugs.
   b. Remove the cam support plate. See Engine → CAM COMPARTMENT AND COMPONENTS.
   c. Secure a dial indicator base to a stable location (crankcase, engine stand, etc.).

   NOTE

   To obtain an accurate measurement, the dial indicator must be set up perpendicular in both directions to the shaft being measured.

   d. Attach a dial indicator and set it up to measure runout at the cam plate bearing contact area of the crankshaft. Adjust the indicator to zero.
   e. Slowly rotate the crankshaft one complete revolution and record the total needle movement.
   f. Compare results of measurements. If the total indicator reading exceeds service wear limit, the crankshaft/flywheel assembly should be removed and checked on a truing stand. Refer to Table 1.
2. **Left Side**
   a. Remove spark plugs.
   b. Remove the primary cover and compensating sprocket. See Drive and Transmission → DRIVE COMPONENTS.
   c. Secure a dial indicator base to a stable location (crankcase, engine stand, etc.).

   NOTE

   To obtain an accurate measurement, the dial indicator must be set up perpendicular in both directions to the shaft being measured.

   d. Attach a dial indicator set up to measure runout near the end of the splined area of the crankshaft. Adjust the indicator to zero on the "high" part of one spline.
   e. Mark the crankshaft and crankcase to use as reference for the amount of rotation.

   NOTE

   Pay attention to only the values from the "high" part of the splines.

   f. Slowly rotate the crankshaft one complete revolution and record the total needle movement.
   g. Compare results to Table 1. If the total indicator reading exceeds service wear limit, remove the crankshaft/flywheel assembly and check on a truing stand.

Crankshaft Removed

NOTE

- The following procedure should be performed if the crankshaft/flywheel assembly is suspected of being out-of-true.
- The crankshaft must be supported by the bearing races during inspection. Never use centers as the holes may not be perfectly centered.
- Verify that the bearing races are in good condition and suitable for performing this inspection.

1. See Figure 1. Mount crankshaft in truing stand so it is supported on the bearing races (1) by the roller supports (2).
2. Secure a dial indicator mount near each end of the crankshaft.

NOTE

Dial indicators must be perpendicular to the shaft in both directions.

3. Set up each indicator (3) to measure the machined surface (4) on one end and splines (5) on the other.
4. Adjust both indicators to zero.
5. Slowly rotate the crankshaft assembly while observing the total indicator reading.

NOTE

Twin Cam crankshaft/flywheel assemblies are not serviceable. Replace parts not within specifications.

6. Compare results of measurements. If the total indicator reading exceeds service wear limit, replace the crankshaft/flywheel assembly. Refer to Table 1.

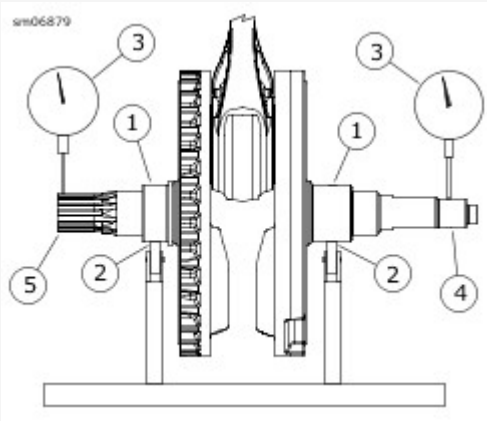

View interactive image

1	Bearing race
2	Roller support
3	Dial indicator
4	Machined surface
5	Spline

Figure 1. Checking Crankshaft Runout

Table 1. Flywheel

FLYWHEEL	REPLACE IF WEAR EXCEEDS	
	IN	MM
Runout (shaft measured in case)	0.012	0.305
Runout (measured in truing stand)	0.005	0.127
End play	0.013	0.330

1.

NOTE
Some valve train noise at start-up is normal until lifters fill with oil. Continuous noise requires diagnosis.

With engine and oil at normal operating temperature, check oil pressure at 2000 rpm.

2. Check oil pressure. See **Engine → OIL PRESSURE → Oil Pressure Check**.
3. If oil pressure is outside of range, inspect following:
   a. Oil pump wear
   b. Crankcase passages for blockages
   c. Oil hoses for blockages
4. If oil-starved hydraulic lifters are suspected, remove lifters and inspect. See **Engine → PUSHRODS, LIFTERS AND COVERS → Inspect Lifters**.
   a. Clean lifter bore of all foreign material.
5. Inspect pushrod, lifter and lifter bore for improper fit and unusual wear.
6. Visually inspect camshaft lobes for abnormal wear.
7. Check top end components.
   a. Check for excess rocker arm end play or binding.
   b. Inspect valve stems for scuffing. Check stem to guide clearance.
   c. Check for loose valve seats or signs of shifting.
8. Grind valves and valve seats. See **Engine → CYLINDER HEADS → Valve and Seat Repair**.

Perform both a compression test and a cylinder leakage test. See **Engine → TROUBLESHOOTING → Compression Test** and **Engine → TROUBLESHOOTING → Cylinder Leakdown Test**. If further testing is needed, inspect for the following:

Check Before Cylinder Head Removal:

1. Oil level too high
2. Oil carryover
3. Restricted breather hose
4. Restricted oil filter

Check After Cylinder Head Removal:

1. Clogged oil return passages
2. Valve guide seals
3. Valve guide to valve stem clearance
4. Gasket surfaces of head and cylinder
5. Cylinder head casting porosity allowing oil to drain into combustion chamber
6. O-ring damaged or missing from oil pump/crankcase junction
7. If the above checks do not reveal the cause:
    a. Remove the cylinder.
    b. Verify that the piston ring gaps are properly staggered.
    c. Inspect for excess piston ring wear.

Removal

NOTE

Pry overlap to release crimp clamps. If clamps must be cut, use a sharp high-quality wire cutter. To prevent breaking plastic fittings, do not twist clamp while cutting.

1. See **Figure 1**. Push the tip of a small screwdriver under end of tang (2).
2.

   NOTE

   Plastic fittings are fragile. Use care when removing clamp.

   Pry until tang is free of tab (1).
3. Remove clamp.

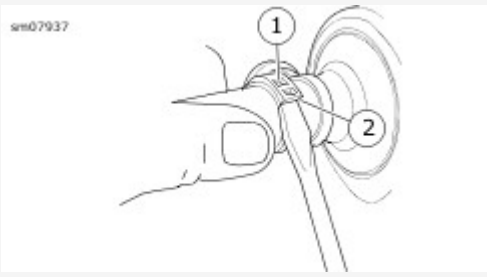

View interactive image

1	Tab
2	Tang

Figure 1. Removing Crimp Clamp

Special Tools

Description	Part Number	Qty.
HOSE CLAMP PLIERS	HD-41137	1

Installation

1. Install **new** clamp.
2. Tighten clamp using:

   Special Tool: **HOSE CLAMP PLIERS** (HD-41137)

1. Remove main fuse. See **Electrical → POWER DISCONNECT**.

Oil Cooler Cover, All But FXDRS

1. See Engine → OIL COOLER → Install → Graphic. Remove oil cooler cover.
   a. Remove screw (6).
   b. Remove oil cooler cover (5).

Oil Cooler Cover, FXDRS

1. See Engine → OIL COOLER → Install → Oil Cooler Cover, FXDRS. Remove oil cooler cover.
   a. Remove screws (4).
   b. Remove oil cooler cover (3).
2. Remove bracket, if needed.
   a. Remove screw (2).
   b. Remove bracket (1).

Oil Cooler

1. See Engine → OIL COOLER → Install → Graphic. Disconnect hoses (9, 10) from the oil cooler (1).
   a. Remove clamps (2, 8). See Engine → CRIMP CLAMPS.
   b. Remove hoses.

   NOTE

   If any damage is caused to the hoses during removal of the crimp clamps, replace the hoses.

2. Remove screw (4) and washer (3).
3. Slide oil cooler assembly up to disengage from isolators (7). Remove oil cooler assembly.

Consumables

Description	Part Number	Size
LOCTITE 243 MEDIUM STRENGTH THREADLOCKER AND SEALANT (BLUE)	99642-97	6 ml (¼ fl oz)

Oil Cooler

NOTE

- See Figure 1. If removed, install hose (9) with paint stripe facing out and at check valve end.

1. See Figure 1. Inspect condition of isolators (7).
2. Install oil cooler assembly.
   LOCTITE 243 MEDIUM STRENGTH THREADLOCKER AND SEALANT (BLUE) (99642-97)
   a. Engage pins on bottom of oil cooler into isolators (7).

      NOTE

      Lubricate pins with 50/50 mix of isopropyl alcohol and water.

   b. Install washer (3) and screw (4). Apply thread locker and tighten.
      Torque: 9.5–11.3 N·m (84–100 **in-lbs**) *Oil cooler screw*
3. Install **new** clamps (2, 8) onto hose (9, 10) ends.
4.

   NOTE

   Clamps should be tightened close to the end of the hose, NOT right behind the barb bead.

   Connect hoses (9, 10) to the oil cooler (1).
   a. Tighten clamps (2, 8). See Engine → CRIMP CLAMPS.

Oil Cooler Cover, All But FXDRS

1. See Figure 2. Install oil cooler cover.
   a. Install oil cooler cover (5).
   b. Install screw (6). Tighten.
      Torque: 9.5–11.5 N·m (7–8 ft-lbs) *Oil cooler cover screw, all but FXDRS*

Oil Cooler Cover, FXDRS

1. See **Figure 1**. Install bracket, if removed.
   a. Install bracket (1).
   b. Install screw (2). Tighten.
      Torque: 17.6–21.7 N·m (13–16 ft-lbs) *Oil cooler cover bracket screw, FXDRS*
2. Install oil cooler cover.
   a. Attach oil cooler cover (3) to hooks on bracket (1).
   b. Install screws (4). Tighten.
      Torque: 32.5–39.3 N·m (24–29 ft-lbs) *Oil cooler cover screws, FXDRS*

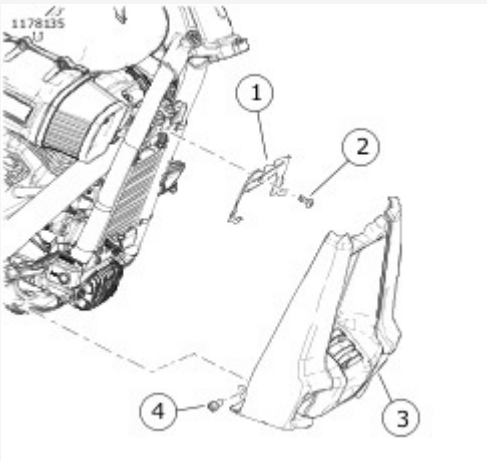

View interactive image

1	Bracket
2	Screw
3	Oil cooler cover
4	Screw (2)

Figure 1. Oil Cooler Cover, FXDRS

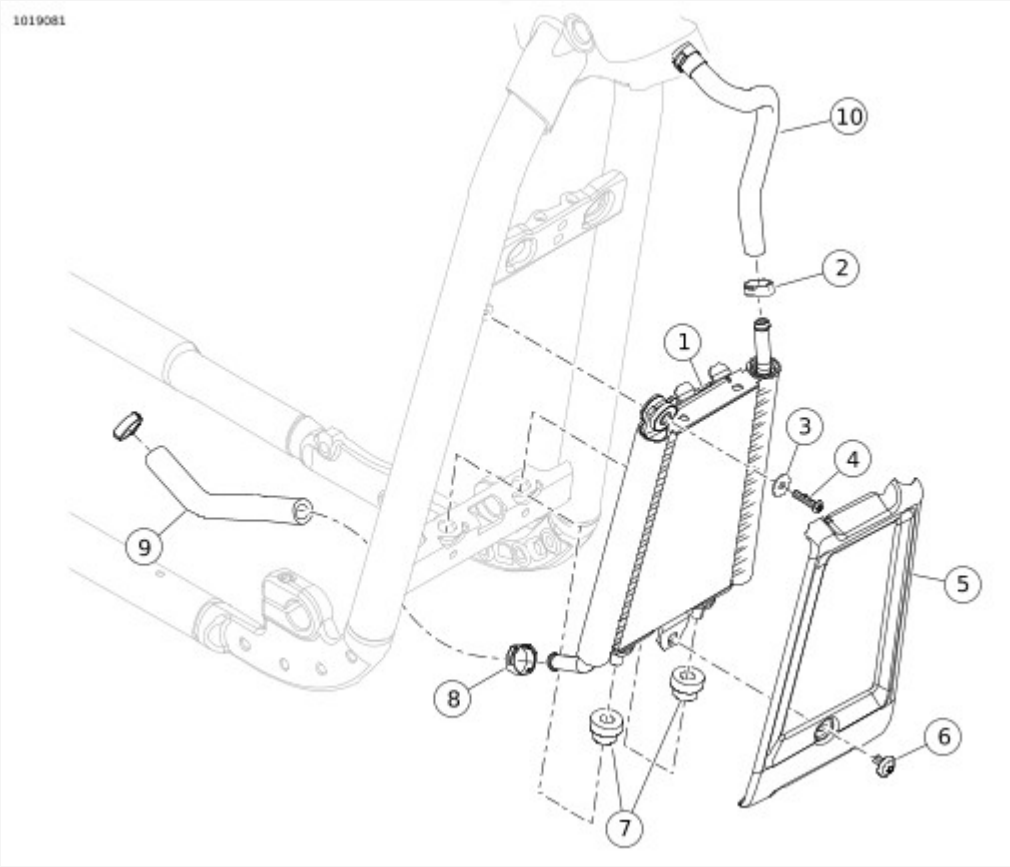

View interactive image

1	Oil cooler
2	Hose clamp (upper hose)
3	Washer
4	Screw
5	Oil cooler cover (all but FXDRS)
6	Screw
7	Isolator (2)
8	Hose clamp (lower hose)
9	Lower hose
10	Upper hose

Figure 2.

1. Check engine oil level. See **Maintenance → REPLACE ENGINE OIL AND FILTER**.
2. Install main fuse. See **Electrical → POWER DISCONNECT**.

1. Remove main fuse. See **Electrical → POWER DISCONNECT**.

1. See **Engine → OIL CHECK VALVE → Install → Oil Check Valve**. Disconnect hose from oil check valve (2). See **Engine → CRIMP CLAMPS**.
2. Remove oil check valve.
3. Discard O-ring (3).

1. See **Figure 1**. Lubricate **new** O-ring (3) with fresh oil.
2. Install oil check valve (2) with O-ring. Tighten.
   Torque: 24.4–29.8 N·m (18–22 ft-lbs) *Crankcase oil check valve or plug with O-ring*
3. Install lower hose.
   a. Place **new** clamp on lower hose.
   b. Connect hose to check valve (2).
   c. Install clamp. See **Engine → CRIMP CLAMPS**.

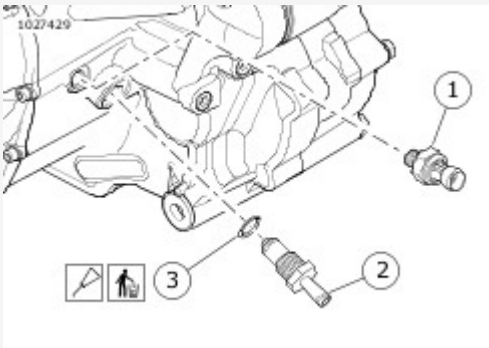

View interactive image

1	Oil pressure switch
2	Oil check valve
3	O-ring

Figure 1. Oil Check Valve

1. Check engine oil level. See **Maintenance → REPLACE ENGINE OIL AND FILTER**.
2. Install main fuse. See **Electrical → POWER DISCONNECT**.

1. Remove left and right side covers. See **Chassis → LEFT SIDE COVER** and **Chassis → RIGHT SIDE COVER**.
2. Remove main fuse. See **Electrical → POWER DISCONNECT**.
3. Remove seat. See **Chassis → SEAT**.
4. Remove fuel tank. See **Fuel and Exhaust → FUEL TANK**.
5. Remove upper engine mount. See **Engine → FRONT ENGINE MOUNT**.
6. Remove oil cooler cover and upper screw. See **Engine → OIL COOLER**.

1. Disconnect right side spark plug cables.
2. See **Engine → OIL COOLANT LINES → Install → Graphic**. Disconnect upper hose (3) from oil cooler.
3. Use low-pressure compressed air to clear residual oil out of line assembly.
    a. Remove engine oil filler cap.
    b. Blow into the hose (3) where disconnected from oil cooler.
4. Disconnect hose (2) from transmission fitting.
    a. Remove hose clamp from hose.
5. Remove screws (1) from each manifold (4).
6. Remove line assembly from the right side.
7. If necessary, remove rear oil hose (2) from line assembly.

Consumables

Description	Part Number	Size
LOCTITE 243 MEDIUM STRENGTH THREADLOCKER AND SEALANT (BLUE)	99642-97	6 ml (¼ fl oz)

NOTE

Verify that all components and mating surfaces are free of all debris before assembling.

1. Clean components.
   a. Remove all residual thread locking material from screws and manifolds.
   b. Clean all debris from mating surfaces and threaded holes.
   c. Clean all debris from coolant ports in heads and manifolds.
   d. Thoroughly clean interior of all lines, especially if an engine failure occurred.
2. See **Figure 1**. If removed, install hose (2) to line assembly. Secure clamp. See **Engine → CRIMP CLAMPS**.
3.

   NOTE

   Make sure o-rings are not rolled after assembly.

   Install **new** O-rings (5) on the ports of each manifold (4).
4. Install line assembly with screws (1).
   a. Apply threadlocker to threads of screws. **LOCTITE 243 MEDIUM STRENGTH THREADLOCKER AND SEALANT (BLUE) (99642-97)**
   b. Tighten to 10.2–13.6 N·m (90–120 **in-lbs**).
5. Install hose (2) to transmission fitting with spring clamp.
6. Connect right spark plug cables.

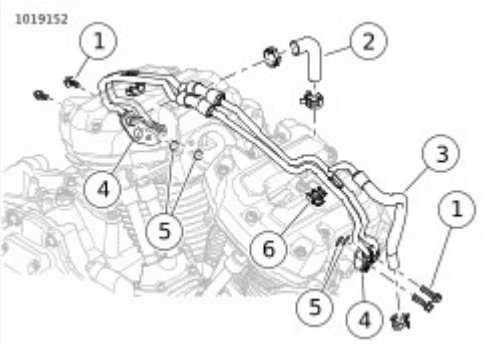

View interactive image

1	Screw (4)

2	Rear oil hose
3	Front oil hose
4	Manifold
5	O-ring (4)
6	Bracket (2)

Figure 1.

1. Install upper front engine mount. See **Engine → FRONT ENGINE MOUNT**.
2. Install oil cooler upper screw and cover. See **Engine → OIL COOLER**.
3. Install fuel tank. See **Fuel and Exhaust → FUEL TANK**.
4. Install seat. See **Chassis → SEAT**.
5. Install main fuse. See **Electrical → POWER DISCONNECT**.
6. Install side covers. See **Chassis → LEFT SIDE COVER**and **Chassis → RIGHT SIDE COVER**.
7. Check engine oil level. See **Maintenance → REPLACE ENGINE OIL AND FILTER**.

Special Tools

Description	Part Number	Qty.
FAT JACK	HD-45968	1

1. Remove main fuse. See **Electrical → POWER DISCONNECT**.
2. **Lower Front Engine Mount:**
   a. Support engine using the following jack or equivalent.

      Special Tool: **FAT JACK** (HD-45968)

   b. Detach right foot control bracket. See **Chassis → RIGHT FOOT CONTROLS**.
   c. Detach rear brake master cylinder bracket. See **Chassis → REAR BRAKE MASTER CYLINDER**.

Remove

1. See Figure 1. Loosen pinch bolt (3).
2. Remove and discard locknut (4).
3. Remove mounting bolt (1).
4. Remove spacer (2).

Install

1. See Figure 1. Install mounting bolt (1) through spacer (2).
2. Install **new** locknut (4). Tighten.
   Torque: 67.8–74.5 N·m (50–55 ft-lbs) *Engine mount bolt, front, lower*
3. See Figure 2.Verify spacer is installed properly.
4. See Figure 1.Tighten pinch bolt (3).
   Torque: 10.2–12.2 N·m (8–9 ft-lbs) *Engine mount pinch bolt, front, lower*

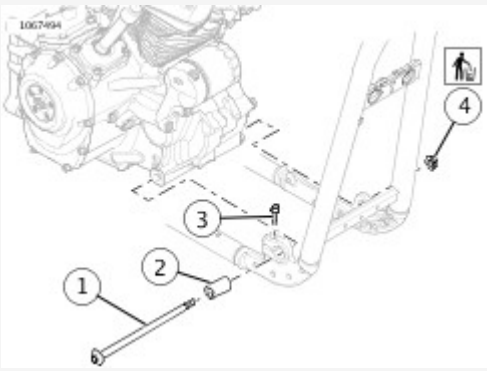

View interactive image

1	Mounting bolt
2	Spacer
3	Pinch bolt
4	Locknut

Figure 1. Lower Front engine Mount

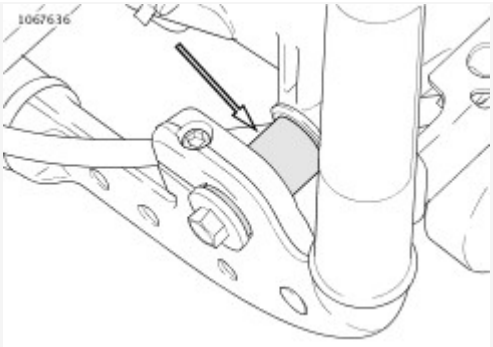

View interactive image

Figure 2. Spacer Installed Properly

Remove

1. See Figure 1. Remove frame-to-engine bracket screws (4).
2. Remove frame bracket (2).
   a. Remove frame bracket screws (3).
   b. Remove frame bracket (2).
3. Remove engine bracket (1).
   a. Loosen engine bracket screws (5).
   b. Remove engine bracket (1) by lifting left side up then pulling to the left.

Install

1. See Figure 1. Install engine bracket.
   a. Install engine bracket (1).
   b. Hand tighten engine bracket screws (5).
2. Install frame bracket.
   a. Install frame bracket (2).
   b. Install frame bracket screws (3). Hand tighten.
3. Install frame bracket-to-engine bracket screws (4). Hand tighten.
4. Tighten fasteners in the following order.
   a. Tighten engine bracket screws (5).
      Torque: 61–67.8 N·m (45–50 ft-lbs) *Engine mount screw, front, upper engine bracket*
   b. **If left side engine mount removed:** Tighten bracket-to-head screws. See Engine → LEFT SIDE ENGINE MOUNT.
   c. Tighten frame bracket screws (3).
      Torque: 61–67.8 N·m (45–50 ft-lbs) *Engine mount screw, front, upper frame bracket*
   d. **If left side engine mount removed:** Tighten bracket-to-frame screws. See Engine → LEFT SIDE ENGINE MOUNT.
   e. Tighten frame bracket-to-engine bracket screws (4).
      Torque: 61–67.8 N·m (45–50 ft-lbs) *Engine mount screw, front, upper frame bracket-to-engine bracket*

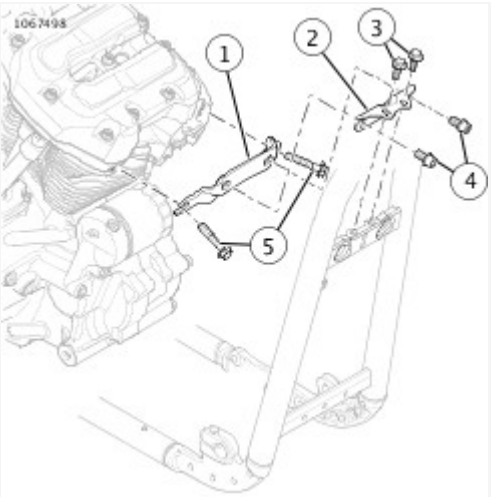

View interactive image

1	Engine bracket
2	Frame bracket
3	Frame bracket screw (2)
4	Frame-to-engine bracket screw (2)
5	Engine bracket screw (2)

Figure 1. Upper Front Engine Mount

1. **Lower Front Engine Mount:**
   a. Attach rear brake master cylinder bracket. See **Chassis → REAR BRAKE MASTER CYLINDER**.
   b. Attach right foot control bracket. See **Chassis → RIGHT FOOT CONTROLS**.
   c. Remove jack.
2. Install main fuse. See **Electrical → POWER DISCONNECT**.

1. Remove main fuse. See **Electrical → POWER DISCONNECT**.
2. Remove ignition coil. See **Electrical → IGNITION COIL**.
3. Lift rear of fuel tank. See **Fuel and Exhaust → PURGE FUEL LINE → Lift Rear Of Fuel Tank**.

1. See **Engine → LEFT SIDE ENGINE MOUNT → Install → Left Side Engine Mount**. Remove bracket (1).
   a. Remove screws (3).
   b. Remove screws and washers (2).
   c. Remove bracket (1).

1. See Figure 1. Install bracket (1).
   a. Install bracket (1).
   b. Install screws and washers (2). Hand tighten.
   c. Install screws (3). Hand tighten.
2.

NOTE

If upper front engine mount was also removed, see the combined tightening sequence in Engine → FRONT ENGINE MOUNT → Remove and Install: Upper Front Engine Mount.

Tighten fasteners in the following order.

   a. Tighten screws and washers (2).
      Torque: 38–44.7 N·m (28–33 ft-lbs) *Engine mount screw, left side, bracket-to-head*
   b. Tighten screws (3).
      Torque: 61–67.8 N·m (45–50 ft-lbs) *Engine mount screw, left side, bracket-to-frame*

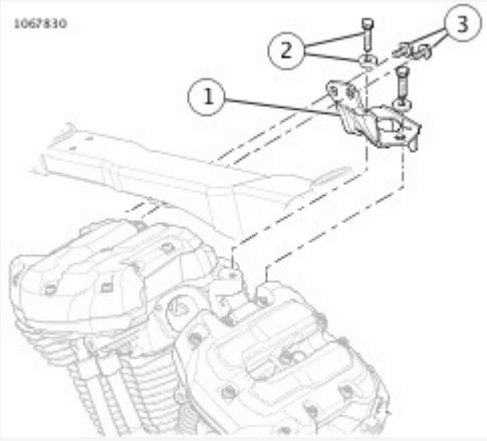

View interactive image

1	Bracket
2	Screw and washer (2)
3	Screw (2)

Figure 1. Left Side Engine Mount

1. Install main fuse. See **Electrical → POWER DISCONNECT**.
2. Install ignition coil. See **Electrical → IGNITION COIL**.
3. Secure fuel tank. See **Fuel and Exhaust → PURGE FUEL LINE → Secure Fuel Tank**.

NOTE

Abrasive particles can damage machined surfaces or plug oil passageways. Clean parts before disassembly to prevent component damage.

1. Use low-pressure compressed air to clean exterior surfaces of engine.
2. Disconnect negative battery cable. See **Electrical → POWER DISCONNECT**.
3. Remove seat. See **Chassis → SEAT**.
4. Remove fuel tank. See **Fuel and Exhaust → FUEL TANK**.
5. Remove spark plug cables. See **Electrical → SPARK PLUG CABLES**.
6. Remove upper front engine mount. See **Engine → FRONT ENGINE MOUNT**.
7. Remove upper cooling lines. See **Engine → OIL COOLANT LINES**.
8. See **Electrical → ENGINE WIRE HARNESS → Remove → Engine Wire Harness**. Reposition engine harness caddy.
   a. Disconnect rear knock sensor (8).
   b. Separate rear knock sensor connector from electrical caddy.
   c. Disconnect rear ACR (9).
   d. Disconnect front ACR (10).
   e. Remove push/lock pin securing electrical caddy to right side of backbone.
   f. Gently bend tabs outward at rear of electrical caddy to separate from backbone.
   g. Move rear electrical caddy and engine wire harness to gain access as needed.

1. See **Engine → UPPER ROCKER COVERS → Complete → Rocker Cover Screws**. Remove the rocker cover screws.
   a. Hold hex on stud (4).
   b. Remove center screw (3).
   c. Remove remaining screws.
2. Remove the rocker cover (2) and gasket (1) from right side of vehicle. Discard gasket.
3. Clean threadlocker from all screws and threaded holes. See **Cleaning Threads and Threaded Holes** in **Foreword → Foreword → Cleaning**.
   a. Cover exposed internal engine area to prevent contamination from loosened threadlocker.
   b. Verify that no foreign material in the threaded hole.

1. Verify that all threaded holes are free from oil and threadlocking residue.
2. Install rocker cover and **new** gasket.
   a. Verify torque of stud (4).
      Torque: 10.2–13.6 N·m (90–120 **in-lbs**) *Lower rocker cover stud*
   b. Apply LOCTITE 243 MEDIUM STRENGTH THREADLOCKER AND SEALANT (blue) to 5-7 screw threads.
   c. Start all screws.
   d. Hold hex on stud (4) when tightening center screw (3).
   e. See **Engine → UPPER ROCKER COVERS → Complete → Rocker Cover Tightening Sequence**. Tighten in sequence shown.
      Torque: 13.6–15.8 N·m (120–140 **in-lbs**) *Upper rocker cover screws*

1. See Electrical → ENGINE WIRE HARNESS → Remove → Engine Wire Harness. Attach engine harness and caddy.
   a. Gently bend tabs outward at rear of electrical caddy to allow rear mounting pins to engage holes in backbone.
   b. Install push/lock pin through electrical caddy mounting hole on right side of backbone.
   c. Connect front ACR (10).
   d. Connect rear ACR (9).
   e. Attach rear knock sensor (8) to electrical caddy.
   f. Connect rear knock sensor.
2. Install upper cooling lines. See Engine → OIL COOLANT LINES.
3. Install upper front engine mount. See Engine → FRONT ENGINE MOUNT.
4. Install spark plug cables. See Electrical → SPARK PLUG CABLES.
5. Install fuel tank. See Fuel and Exhaust → FUEL TANK.
6. Install seat. See Chassis → SEAT.
7. Connect negative battery cable. See Electrical → POWER DISCONNECT.

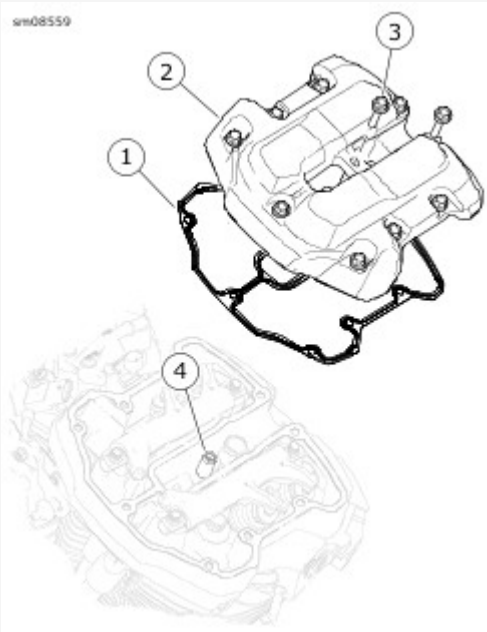

View interactive image

1	Gasket
2	Upper rocker cover
3	Screw (10)
4	Stud

Figure 1. Rocker Cover Screws

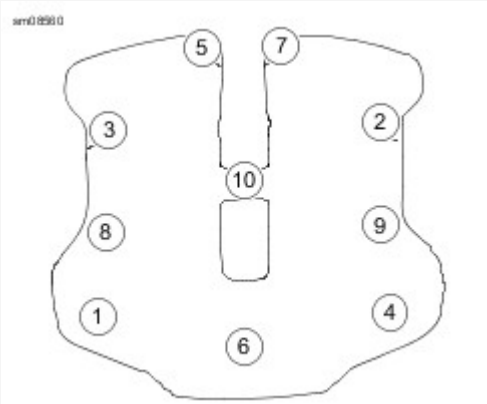

View interactive image

Figure 2. Rocker Cover Tightening Sequence

NOTE

Abrasive particles can damage machined surfaces or plug oil passageways. Clean parts before disassembly to prevent component damage.

1. Use low-pressure compressed air to clean exterior surfaces of engine.
2. Disconnect negative battery cable. See **Electrical → POWER DISCONNECT**.
3. Remove seat. See **Chassis → SEAT**.
4. Remove fuel tank. See **Fuel and Exhaust → FUEL TANK**.
5. Remove spark plug cables. See **Electrical → SPARK PLUG CABLES**.
6. Remove upper front engine mount. See **Engine → FRONT ENGINE MOUNT**.
7. Remove oil cooler upper screw. See **Engine → OIL COOLER**.
8. Remove upper cooling lines. See **Engine → OIL COOLANT LINES**.
9. Disconnect electrical connectors.
   a. **Rear cylinder:** Knock sensor and ACR.
   b. **Front cylinder:** ACR.
10. Remove left side spark plugs. See **Maintenance → CLEAN AND INSPECT SPARK PLUGS**.
11. Remove upper rocker covers. See **Engine → UPPER ROCKER COVERS**.

1. See **Engine → BREATHERS → Install → Breather**. Remove screw (1).
2. Remove breather assembly (2).

NOTE

Breather assembly contains no service parts. Replace as an assembly.

1. See **Figure 1**. Lubricate O-ring (3).
2. Install breather with screw (1). Tighten to 10.2–13.6 N·m (90–120 **in-lbs**).

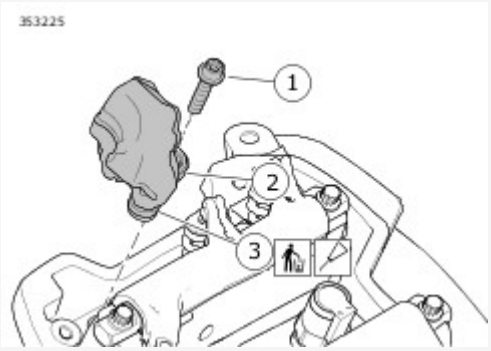

View interactive image

1	Screw
2	Breather assembly
3	O-ring

Figure 1. Breather

1. Install upper rocker covers. See **Engine → UPPER ROCKER COVERS**.
2. Install spark plugs. See **Maintenance → CLEAN AND INSPECT SPARK PLUGS**.
3. Connect electrical connectors.
   a. **Rear cylinder:** Knock sensor and ACR.
   b. **Front cylinder:** ACR.
4. Install upper cooling lines. See **Engine → OIL COOLANT LINES**.
5. Install oil cooler upper screw. See **Engine → OIL COOLER**.
6. Install upper front engine mount. See **Engine → FRONT ENGINE MOUNT**.
7. Install spark plug cables. **Electrical → SPARK PLUG CABLES**.
8. Install fuel tank. See **Fuel and Exhaust → FUEL TANK**.
9. Install seat. See **Chassis → SEAT**.
10. Connect negative battery cable. See **Electrical → POWER DISCONNECT**.

NOTE

Abrasive particles can damage machined surfaces or plug oil passageways. Clean parts before disassembly to prevent component damage.

1. Use low-pressure compressed air to clean exterior surfaces of engine.
2. Disconnect negative battery cable. See **Electrical → POWER DISCONNECT**.
3. Remove seat. See **Chassis → SEAT**.
4. Remove fuel tank. See **Fuel and Exhaust → FUEL TANK**.
5. Remove spark plug cables. See **Electrical → SPARK PLUG CABLES**.
6. Remove air cleaner. See **Maintenance → INSPECT AIR FILTER**.
7. Remove air cleaner backplate assembly. See **Fuel and Exhaust → AIR CLEANER BACKPLATE ASSEMBLY**.
8. Remove upper front engine mount. See **Engine → FRONT ENGINE MOUNT**.
9. Remove oil cooler upper screw. See **Engine → OIL COOLER**.
10. Remove upper cooling lines. See **Engine → OIL COOLANT LINES**.
11. Disconnect electrical connectors.
    a. **Rear cylinder:** Knock sensor and ACR.
    b. **Front cylinder:** ACR.
12. Remove spark plugs. See **Maintenance → CLEAN AND INSPECT SPARK PLUGS**.
13. Remove upper rocker covers. See **Engine → UPPER ROCKER COVERS**.
14. Remove breathers. See **Engine → BREATHERS**.

1. See **Engine → LOWER ROCKER COVERS → Install → Lower Rocker Cover**. Remove lower rocker cover.
    a. Remove five screws.
    b. Lift off from cylinder head.
    c. **Engine in chassis:** Remove from left side.
2. Discard gasket.
3. Clean threadlocker from all screws and threaded holes. See **Cleaning Fastener Threads** in **Foreword → Foreword → Cleaning**.
    a. Cover exposed internal engine area to prevent contamination from loosened threadlocker.

1. Install **new** gasket.
2. See **Figure 1**. Install lower rocker cover.
   a. **Engine in chassis:** Install from left side.
   b. Apply LOCTITE 243 MEDIUM STRENGTH THREADLOCKER AND SEALANT (blue) to 5-7 screw threads.
   c. Start four screws and the stud.
   d. Tighten in sequence shown to 10.2–13.6 N·m (90–120 **in-lbs**).

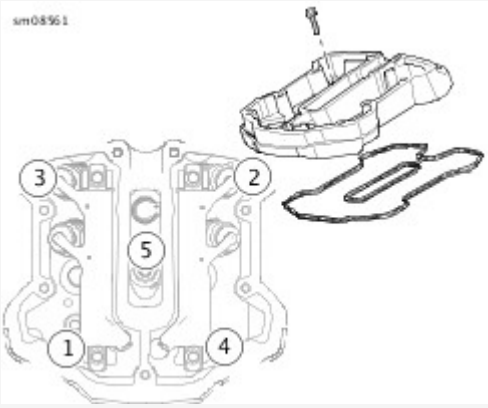

View interactive image

Figure 1. Lower Rocker Cover

1. Install breathers. See **Engine → BREATHERS**.
2. Install upper rocker covers. See **Engine → UPPER ROCKER COVERS**.
3. Install spark plugs. See **Maintenance → CLEAN AND INSPECT SPARK PLUGS**.
4. Connect electrical connectors.
   a. **Rear cylinder:** Knock sensor and ACR.
   b. **Front cylinder:** ACR.
5. Install upper cooling lines. See **Engine → OIL COOLANT LINES**.
6. Install oil cooler upper screw. See **Engine → OIL COOLER**.
7. Install upper front engine mount. See **Engine → FRONT ENGINE MOUNT**.
8. Install air cleaner backplate assembly. See **Fuel and Exhaust → AIR CLEANER BACKPLATE ASSEMBLY**.
9. Install air cleaner. See **Maintenance → INSPECT AIR FILTER**.
10. Install spark plug cables. See **Electrical → SPARK PLUG CABLES**.
11. Install fuel tank. See **Fuel and Exhaust → FUEL TANK**.
12. Install seat. See **Chassis → SEAT**.
13. Connect negative battery cable. See **Electrical → POWER DISCONNECT**.

NOTE

Abrasive particles can damage machined surfaces or plug oil passageways. Clean parts before disassembly to prevent component damage.

1. Use low-pressure compressed air to clean exterior surfaces of engine.
2. Disconnect negative battery cable. See **Electrical → POWER DISCONNECT**.
3. Remove seat. See **Chassis → SEAT**.
4. Remove fuel tank. See **Fuel and Exhaust → FUEL TANK**.
5. Remove spark plug cables. See **Electrical → SPARK PLUG CABLES**.
6. Remove upper front engine mount. See **Engine → FRONT ENGINE MOUNT**.
7. Remove oil cooler upper screw. See **Engine → OIL COOLER**.
8. Remove upper cooling lines. See **Engine → OIL COOLANT LINES**.
9. Disconnect electrical connectors.
   a. **Rear cylinder:** Knock sensor and ACR.
   b. **Front cylinder:** ACR.
10. Remove left side spark plugs. See **Maintenance → CLEAN AND INSPECT SPARK PLUGS**.
11. Remove upper rocker covers. See **Engine → UPPER ROCKER COVERS**.

1. Remove rocker arms.
   a. Set piston at TDC on the compression stroke.
   b. See **Figure 1**. Alternately loosen screws (3) until screws can be turned by hand.
   c. Remove screws.
   d. Remove rocker shaft (1) and rocker arm (4).
   e. Repeat with remaining rocker arm.

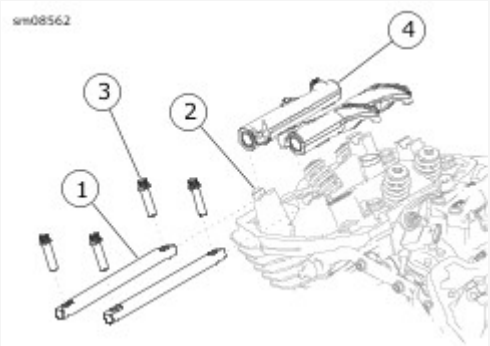

View interactive image

1	Shaft
2	Head casting
3	Screw
4	Rocker arm

Figure 1. Remove Rocker Arms

1. Clean all parts.
2. Inspect for wear. Replace or repair as necessary.
    a. Measure rocker arm bore.
    b. Measure rocker arm shaft for excessive wear.
    c. Inspect valve contact areas for excessive wear.
    d. Inspect pushrod pocket for excessive wear.
    e. Verify that oil holes in rocker arms are clean and open.

1. Set piston at approximate BDC on the power stroke.
2. Install rocker arms.
   a. Verify that lifters are on the base circle of the camshaft lobe.
   b. See **Engine → ROCKER ARMS → Remove → Remove Rocker Arms**. Install rocker arm (4) and rocker shaft (1).
   c. Verify that rocker shaft is seated in both towers.
   d. Install screws (3).
   e. Alternately tighten screws to pull rocker shaft down evenly.
   f. Tighten to 31.2–36.6 N·m (23–27 ft-lbs).
   g. Repeat with remaining rocker arms.
3. Allow lifters to bleed down. When lifters have bled down, pushrods can be rotated by hand.

NOTE
Do not rotate crankshaft until lifters have bled down. Rotating crankshaft sooner could result in valve-to-piston contact resulting in damage.

4. Check valve lash after lifters have bled down.
   a. Position crankshaft at TDC of compression stroke. All valves will be closed.
   b. While holding rocker arm against valves, attempt to slide a feeler gauge between each valve stem tip and the rocker arm.
   c. The maximum allowable lash on a common rocker arm is 0.2 mm (0.008 in). A measurement in excess requires disassembly and repair of cylinder head assembly.

1. Install upper rocker covers. See **Engine → UPPER ROCKER COVERS**.
2. Install spark plugs. See **Maintenance → CLEAN AND INSPECT SPARK PLUGS**.
3. Connect electrical connectors.
   a. **Rear cylinder:** Knock sensor and ACR.
   b. **Front cylinder:** ACR.
4. Install upper cooling lines. See **Engine → OIL COOLANT LINES**.
5. Install oil cooler upper screw. See **Engine → OIL COOLER**.
6. Install upper front engine mount. See **Engine → FRONT ENGINE MOUNT**.
7. Install spark plug cables. **Electrical → SPARK PLUG CABLES**.
8. Install fuel tank. See **Fuel and Exhaust → FUEL TANK**.
9. Install seat. See **Chassis → SEAT**.
10. Connect negative battery cable. See **Electrical → POWER DISCONNECT**.

NOTE

Abrasive particles can damage machined surfaces or plug oil passageways. Clean parts before disassembly to prevent component damage.

1. Use low-pressure compressed air to clean exterior surfaces of engine.
2. Disconnect negative battery cable. See **Electrical → POWER DISCONNECT**.
3. Remove seat. See **Chassis → SEAT**.
4. Remove fuel tank. See **Fuel and Exhaust → FUEL TANK**.
5. Remove spark plug cables. See **Electrical → SPARK PLUG CABLES**.
6. Remove air cleaner. See **Maintenance → INSPECT AIR FILTER**.
7. Remove air cleaner backplate assembly. See **Fuel and Exhaust → AIR CLEANER BACKPLATE ASSEMBLY**.
8. Remove upper front engine mount. See **Engine → FRONT ENGINE MOUNT**.
9. Remove oil cooler cover and upper screw. See **Engine → OIL COOLER**.
10. Remove upper cooling lines. See **Engine → OIL COOLANT LINES**.
11. Disconnect electrical connectors.
    a. **Rear cylinder:** Knock sensor and ACR.
    b. **Front cylinder:** ACR
12. Remove spark plugs. See **Maintenance → CLEAN AND INSPECT SPARK PLUGS**.
13. Remove upper rocker covers. See **Engine → UPPER ROCKER COVERS**.
14. Remove rocker arms. See **Engine → ROCKER ARMS**.

NOTE

Mark parts for location and orientation during removal.

1. Remove pushrods.
2. Remove pushrod covers using 94086-09 (PUSHROD COVER RETAINER INSTALLATION AND REMOVAL TOOL).
   a. See Figure 1. Alternately, insert the blade of a screwdriver in tab (1) of spring cap retainer.
   b. While pushing down on spring cap (2), rotate bottom of retainer outboard.
3. Remove pushrod covers.
   a. Collapse upper and lower pushrod covers.
4. Disassemble pushrod cover assemblies.
   a. Discard three O-rings.
5. See Figure 2. Remove lifter covers.
   a. Remove four screws (1).
   b. Remove the lifter cover (2) and gasket (3). Discard gasket.
6. Remove lifters.
   a. Remove screw (4) securing anti-rotation device (5).
   b. Remove anti-rotation device.
   c. Remove the lifters (6) and place in clean plastic bags to prevent contamination.

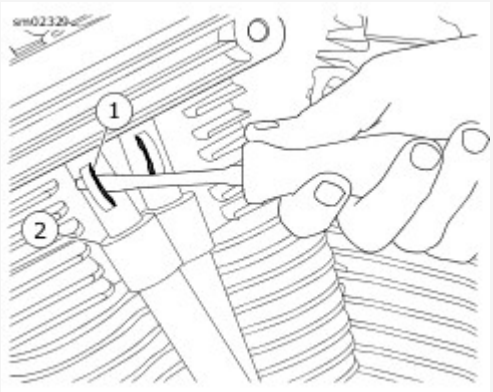

View interactive image

1	Tab
2	Spring cap

Figure 1. Removing Spring Cap Retainer

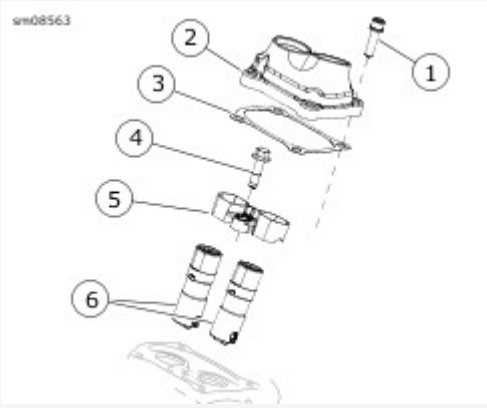

View interactive image

1	Screw (4)
2	Lifter cover
3	Gasket
4	Screw
5	Anti-rotation device
6	Lifter (2)

Figure 2. Lifter Cover

1. Except for the hydraulic lifters, clean all parts in a non-volatile cleaning solution or solvent.

> **WARNING**
>
> Compressed air can pierce the skin and flying debris from compressed air could cause serious eye injury. Wear safety glasses when working with compressed air. Never use your hand to check for air leaks or to determine air flow rates. (00061a)

2. Dry parts with low-pressure, compressed air.
3. Verify that the O-ring seats and contact surfaces of the pushrod covers are completely clean.
4. Verify that all oil holes are clean and open.
5. Examine the pushrods. Replace any pushrods that are bent, dented, damaged, discolored or if the ball ends show signs of excessive wear or damage.
6. Cover all parts to protect them from dust and dirt.

1. Measure the lifter outer diameter. Record the measurement.
2. Measure lifter bore. Subtract this measurement from the lifter measurement to determine clearance.
   a. Clearance when **new** is 0.023–0.066 mm (0.0009–0.0026 in)
   b. Install **new** lifters and/or replace crankcases if clearance exceeds service wear limit of 0.152 mm (0.006 in)
3. Check lifter roller end clearance.
   a. Allowable end clearance is within. 0.203–0.559 mm (0.008–0.022 in)
   b. Replace lifters if end clearance exceeds service wear limit of. 0.559 mm (0.022 in)
4. Soak lifters in clean engine oil. Keep covered until assembly.
5. Examine lifter rollers. If damaged, examine the associated cam lobe.
   a. Verify that the hydraulic lifter rollers turn freely.
   b. Check for flat spots, scuff marks and pitting.
   c. See **Engine → PUSHRODS, LIFTERS AND COVERS → Inspect Lifters → Roller Inspection**. A dull lifter roller surface is called frosting (2). Frosting is a cosmetic condition and does not affect function.
6. Inspect the lifter for signs of wear.
   a. Verify that the plunger is fully extended against the C-clip.
   b. Pump plunger to verify operation.

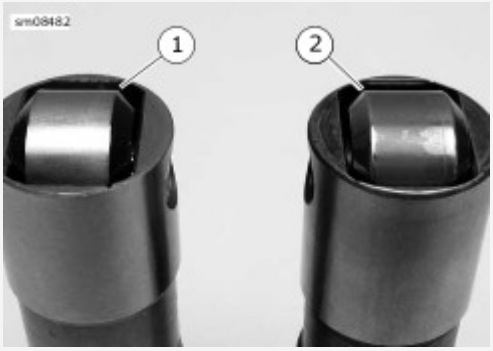

View interactive image

1	Normal roller
2	Frosted roller

Figure 1. Roller Inspection

1. See [Engine → PUSHRODS, LIFTERS AND COVERS → Assemble Pushrod Cover → Assembled Pushrod Cover]. Apply a film of clean engine oil to **new** O-rings (1, 6 and 8).
2. Install upper O-ring (1) on the upper pushrod cover (2).
3. Slide the spring cap (4) and spring (5) onto the body of the upper pushrod cover. Move parts up until spring cap contacts upper O-ring seat.
4. Install middle O-ring (6) into groove on top of lower pushrod cover (7).
5. Apply a light film of clean engine oil on the upper pushrod cover.
6. Slide the straight end of the upper pushrod cover into the end of the lower pushrod cover.
7. Wipe pushrod covers clean.
8. Install lower O-ring (8) on lower pushrod cover.

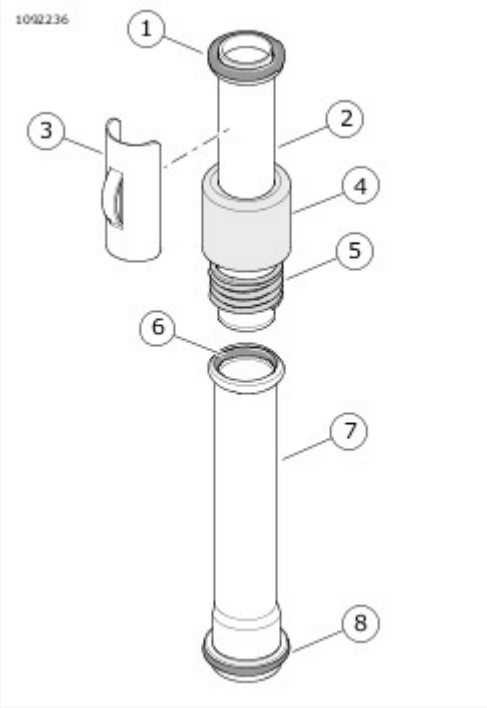

View interactive image

1	Upper O-ring (small)
2	Upper pushrod cover
3	Spring cap retainer
4	Spring cap
5	Spring
6	Middle O-ring (intermediate)
7	Lower pushrod cover
8	Lower O-ring (large)

Figure 1. Assembled Pushrod Cover

NOTE

Anti-rotation devices are marked "F" (front) and "R" (rear).

1. Install lifters.
   a. Apply SCREAMIN' EAGLE ASSEMBLY LUBE to outer surface of each lifter. Pour a small amount onto each cam lobe.
   b. Rotate crankshaft until both cam lobes are visible in lifter bores.
   c. Carefully install lifters in lifter bores. Do not drop lifters onto cam lobes.
   d. See **Engine → PUSHRODS, LIFTERS AND COVERS → Remove → Lifter Cover**. Install anti-rotation device.
   e. Install screw (4). Tighten.
      Torque: 10.2–13.6 N·m (90–120 **in-lbs**) *Lifter anti-rotation device screw*
2. Install lifter cover (2), **new** gasket (3) and screws (1). Tighten in a cross-wise pattern.
   Torque: 14.9–17.6 N·m (132–156 **in-lbs**) *Lifter cover screws*
3. Install pushrod covers.
   a. Assemble pushrod covers with **new** O-rings.
   b. Install **new** O-rings on each end of the pushrod cover.
   c. Compress pushrod cover assembly and fit into lifter cover bore.
   d. Extend assembly into cylinder head bore.
   e. Verify that the ends of the pushrod cover fit snugly into cylinder head and lifter cover bores.
4. Install spring cap retainers using 94086-09 (PUSHROD COVER RETAINER INSTALLATION AND REMOVAL TOOL).
   a. Insert upper edge of spring cap retainer into cylinder head bore.
   b. See **Figure 1**. Alternately, insert blade of small screwdriver between bottom edge of spring cap retainer and top of spring cap.
   c. Press spring cap down and slide bottom edge of retainer toward tip of screwdriver.
   d. Verify that spring cap retainer seats tightly against upper pushrod cover.
5. Apply a small amount of SCREAMIN' EAGLE ASSEMBLY LUBE to ends of each pushrod.
6.

   NOTE

   If installing original parts, install them in their original location and orientation. Use 10.301 inch long (light blue stripes) as intake and 10.531 inch long (yellow stripes) as exhaust.

   Install pushrods.

View interactive image

Figure 1. Install Spring Cap Retainers

1. Install rocker arms. See **Engine → ROCKER ARMS**.
2. Install upper rocker covers. See **Engine → UPPER ROCKER COVERS**.
3. Install spark plugs. See **Maintenance → CLEAN AND INSPECT SPARK PLUGS**.
4. Connect electrical connectors.
   a. **Rear cylinder:** Knock sensor and ACR.
   b. **Front cylinder:** ACR
5. Install upper cooling lines. See **Engine → OIL COOLANT LINES**.
6. Install oil cooler upper screw and cover. See **Engine → OIL COOLER**.
7. Install upper front engine mount. See **Engine → FRONT ENGINE MOUNT**.
8. Install air cleaner backplate assembly. See **Fuel and Exhaust → AIR CLEANER BACKPLATE ASSEMBLY**.
9. Install air cleaner. See **Maintenance → INSPECT AIR FILTER**.
10. Install spark plug cables. See **Electrical → SPARK PLUG CABLES**.
11. Install fuel tank. See **Fuel and Exhaust → FUEL TANK**.
12. Install seat. See **Chassis → SEAT**.
13. Connect negative battery cable. See **Electrical → POWER DISCONNECT**.

NOTE

Abrasive particles can damage machined surfaces or plug oil passageways. Clean parts before disassembly to prevent component damage.

1. Use low-pressure compressed air to clean exterior surfaces of engine.
2. Disconnect negative battery cable. See **Electrical → POWER DISCONNECT**.
3. Remove seat. See **Chassis → SEAT**.
4. Remove fuel tank. See **Fuel and Exhaust → FUEL TANK**.
5. Remove spark plug cables. See **Electrical → SPARK PLUG CABLES**.
6. Remove coil. See **Electrical → IGNITION COIL**.
7. Remove left side engine mount. See **Engine → LEFT SIDE ENGINE MOUNT**.
8. Remove air cleaner. See **Maintenance → INSPECT AIR FILTER**.
9. Remove air cleaner backplate assembly. See **Fuel and Exhaust → AIR CLEANER BACKPLATE ASSEMBLY**.
10. Remove upper front engine mount. See **Engine → FRONT ENGINE MOUNT**.
11. Remove oil cooler cover and upper screw. See **Engine → OIL COOLER**.
12. Remove upper cooling lines. See **Engine → OIL COOLANT LINES**.
13. Remove induction module. See **Fuel and Exhaust → INDUCTION MODULE**.
14. Disconnect electrical connectors.
    a. **Rear cylinder:** Engine temperature sensor, knock sensor, and ACR.
    b. **Front cylinder:** Knock sensor and ACR.
15. Remove spark plugs. See **Maintenance → CLEAN AND INSPECT SPARK PLUGS**.
16. Remove upper rocker covers. See **Engine → UPPER ROCKER COVERS**.
17. Remove breathers. See **Engine → BREATHERS**.
18. Remove lower rocker covers. See **Engine → LOWER ROCKER COVERS**.
19. Remove rocker arms. See **Engine → ROCKER ARMS**.
20. Remove pushrods, lifters and covers. See **Engine → PUSHRODS, LIFTERS AND COVERS**.

1. Disconnect knock sensor connector.
2. See **Figure 1**. Remove cylinder head bolts.
    a. Loosen each cylinder head bolt in sequence shown.
    b. Remove head bolts.
3. Remove cylinder head.
    a. Lift cylinder head from dowel pins.
    b. Discard gasket.

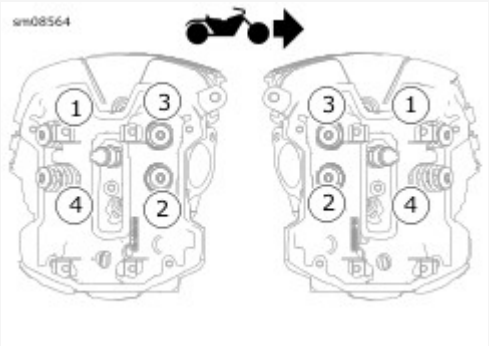

View interactive image

Figure 1. Head Bolt Tightening Sequence

NOTE

Avoid getting debris in coolant and oil passages during gasket removal and cleaning.

1. Remove old gasket material from cylinder head. Do not cause scratches or nicks.

NOTE

Bead blasting materials could enter threaded holes. This would adversely affect fastener engagement and torque indication. Cover all threaded holes before bead blasting.

NOTICE

Do not use glass or sand to bead blast surfaces exposed to engine oil. Blasting materials can lodge in pores of the casting. Heat expansion releases this material which can contaminate oil resulting in engine damage. (00534b)

2. Remove all carbon deposits from combustion chamber and machined surfaces of cylinder head. Do not remove any metal material.
3. To soften stubborn deposits, soak the cylinder head in a chemical solution, such as GUNK HYDRO-SEAL or other carbon and gum dissolving agent. Repeat previous step as necessary.

NOTE

Keep all parts grouped by location so they can be installed in the original location.

4. Thoroughly clean the cylinder head, spring retainers, tapered keepers, valves and valve springs in a non-volatile cleaning solution or solvent. Follow up with a thorough wash in hot soapy water.
5. Thoroughly flush all coolant and oil passages to remove loose debris.

WARNING

Compressed air can pierce the skin and flying debris from compressed air could cause serious eye injury. Wear safety glasses when working with compressed air. Never use your hand to check for air leaks or to determine air flow rates. (00061a)

6. Dry parts with low-pressure, compressed air.
7. Clean threadlocker from all screws and threaded holes. See

Cleaning Fastener Threads in Foreword → Foreword → Cleaning.

a. Cover exposed internal engine area to prevent contamination from loosened threadlocker.

1. Clean all gasket surfaces.
2. Thoroughly flush all coolant and oil passages to remove loose debris.
3. See **Figure 1**. Install cylinder head.
   a. Install **new** gasket with the part number facing up.
   b. Install cylinder head on dowel pins.
4. Install cylinder head flange nuts.
   a. Apply **new** engine oil to flanges and threaded portion of the cylinder head nuts.
   b. Install cylinder head nuts.
5. See **Engine → CYLINDER HEADS → Remove → Head Bolt Tightening Sequence**.Tighten head nuts in five stages following sequence shown.
   a. Tighten.
      Torque: 27.1–40.7 N·m (20–30 ft-lbs) *Cylinder head nut torque step 1.*
   b. Loosen one full turn.
      Torque: -360° (-360°) *Cylinder head nut torque step 2. Loosen one turn.*
   c. Tighten.
      Torque: 12.2–14.9 N·m (9–11 ft-lbs) *Cylinder head nut torque step 3.*
   d. Tighten.
      Torque: 33.9–36.6 N·m (25–27 ft-lbs) *Cylinder head nut torque step 4.*
   e. Tighten to final torque.
      Torque: 90° (90°) *Cylinder head nut torque step 5. Tighten additional degree value.*
6. Connect knock sensor, engine temperature sensor, and ACR.

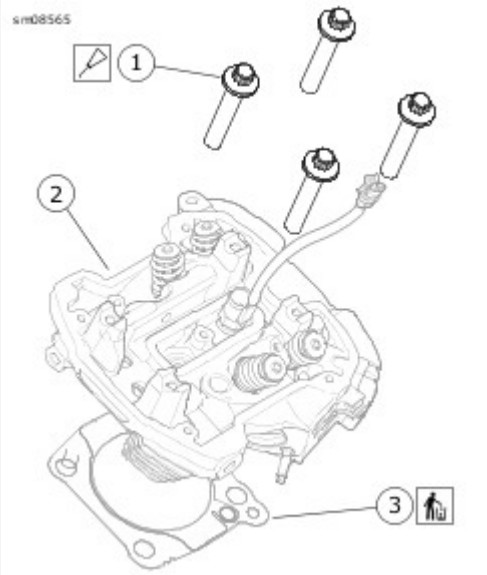

View interactive image

1	Head flange nut (4)

2	Cylinder head
3	Head gasket

Figure 1. Cylinder Head

Special Tools

Description	Part Number	Qty.
CYLINDER HEAD HOLDING FIXTURE	B-49312	1
VALVE SPRING COMPRESSOR	HD-34736-B	1

1. Secure cylinder head for service.
    a. Remove spark plugs.
    b. Turn 12 mm end of CYLINDER HEAD HOLDING FIXTURE (Part Number:B-49312) (1) into cylinder head (2) spark plug hole.
    c. Clamp tool in vise at a comfortable working position.
2. Remove ACR. See Electrical → AUTOMATIC COMPRESSION RELEASE (ACR).
3. See Figure 1. Remove screw (2) and knock sensor (1).
4. Remove cylinder head temperature sensor (3).
5. See Figure 3. Remove valves.
    a. See Figure 2. Use VALVE SPRING COMPRESSOR (Part Number:HD-34736-B) to compress valve spring.
    b. Remove tapered keepers (1).
    c. Slowly release valve spring compression.
    d. Remove the spring retainer (2) and valve spring (3).
    e. Remove the valve (11).
6. Remove and discard valve stem seal assembly (4).
7. Identify components.
    a. Mark the valve head for identification.
    b. Place tapered keepers, valve spring and spring retainer in a plastic bag with identification.
8. Remove the remaining valves and components.

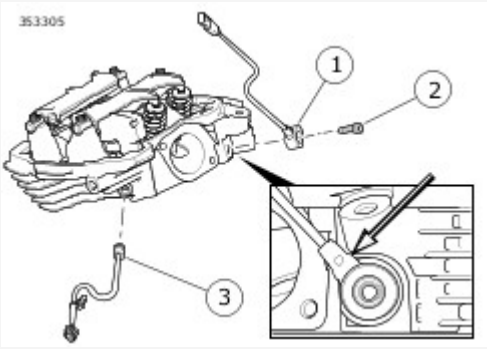

View interactive image

1	Knock sensor
2	Screw
3	ET (Engine temperature) sensor (rear head only)

Figure 1. Cylinder Head Sensors

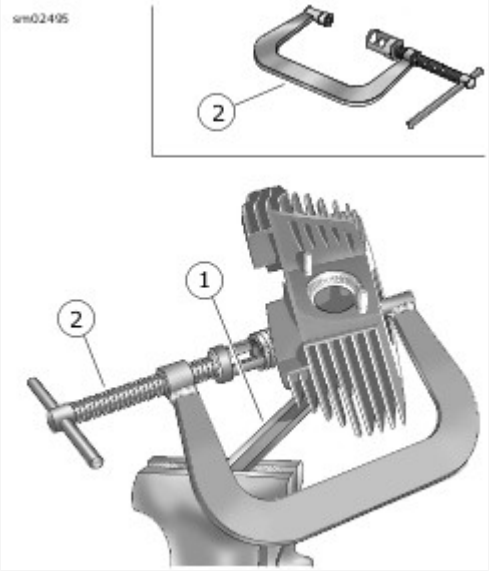

View interactive image

1	Holding fixture
2	Compressor

Figure 2. Valve Spring Compressor

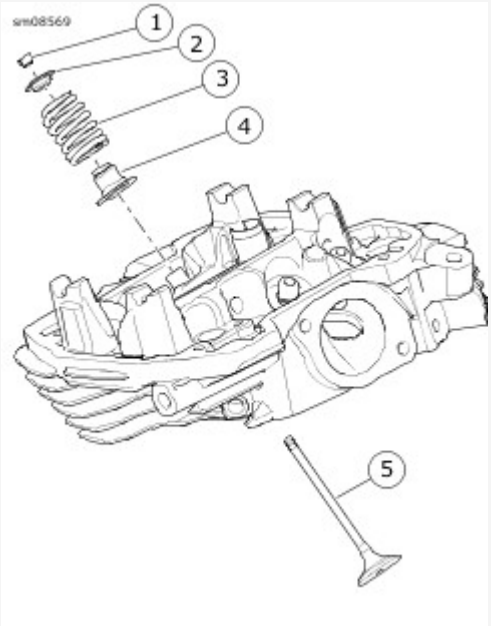

View interactive image

1	Keepers (2)
2	Retainer
3	Spring
4	Stem seal assembly

5	Valve

Figure 3. Valve Components

Special Tools

Description	Part Number	Qty.
VALVE GUIDE HONE	B-45525	1
CLEANING BRUSH	HD-34751	1

See **Engine → SPECIFICATIONS** for specifications not shown here.

Cylinder Head

1. Check all gasket sealing surfaces for scratches and nicks.
2. Check head flatness with feeler gauge.
   a. Using a straightedge, check gasket surface for warpage.
   b. Replace the head if warpage is beyond specification.
      Length/Dimension/Distance: 0.152 mm (0.006 in)
3. Verify that all oil holes are clean and open.

Valve Guides

1. Inspect external surfaces for cracks.
2. Prepare valve guides for inspection.
   a. Lightly hone bore.

      Special Tool: **VALVE GUIDE HONE** (B-45525)

   b. Scrub bore.

      Special Tool: **CLEANING BRUSH** (HD-34751)

   c. Polish valve stem with fine emery cloth or steel wool to remove carbon buildup.
3. Check valve stem to guide clearance.
   a. Measure the **inside** diameter of the valve guide.
   b. Measure the **outside** diameter of the valve stem.
   c. If stem to guide clearance exceeds service limits, repeat measurements with a **new** valve to determine worn components.
   d. If stem to guide clearance exceeds service limits with a **new** valve, replace cylinder head.

Valves and Valve Seats

1. With valves removed, inspect the sealing surface of the valve face and valve seat.
2. a. The sealing surfaces must be smooth and even around entire contact area.

b. If the sealing contact area is uneven or shows evidence of pitting, carbon tracking, or other indications of combustion gas leakage, recondition the valve and seat, or replace cylinder head assembly. See **Engine → CYLINDER HEADS → Valve and Seat Repair**

3. Inspect the valve for burning, cracking, carbon tracking, or other indications of combustion gas leakage.
4. Inspect the end of the valve stem for pitting or uneven wear.
5. Remove burrs around the valve stem keeper groove with a fine tooth file.
6. To determine if the valve stem is excessively worn, see valve guide inspection.

Valve Springs

1. Inspect springs for cracked or discolored coils.
2. Check for squareness.
3. Check free length.
4. Load test using a commercially available valve spring tester.

Tapered Keepers

Install **new** keepers any time valves are installed.

Valve Seats

1. Inspect seats for cracking, chipping or burning, carbon tracking, or other indications of combustion gas leakage.
2. Check seat wear by measuring valve stem protrusion. See **Engine → CYLINDER HEADS → Valve and Seat Repair**.
3. Replace cylinder head if seats are damaged or worn excessively.

NOTE

- Verify correct valve stem to valve guide clearance before refacing. Refer to **Table 1**.
- The correct finished angles are 45 degree valve face and 46 degree valve seat eliminating the need to lap.
- Finish valve seat to an even width of 1.016–1.575 mm (0.040–0.062 in).
- See **Figure 1**. Replace the valve if margin (5) is less than 0.795 mm (0.0313 in).
- Refurbish valves and seats in pairs. Valve stem protrusion of a pair operated by the same rocker arm must be equal. Verify that valve lash is within specification. See **Engine → ROCKER ARMS → Install**.
- If valve stem protrusion exceeds 44.5 mm (1.752 in), replace the valve or cylinder head as necessary.

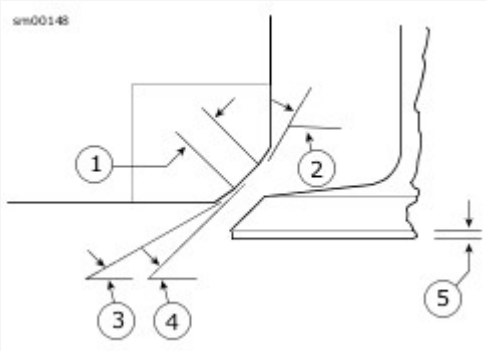

View interactive image

1	0.040-0.080 in (1.02-2.03 mm)
2	60 degrees
3	31 degrees
4	46 degrees
5	Margin: 0.031 in (0.79 mm) minimum

Figure 1. Valve and Seat Dimensions

Table 1. Valve Stem to Guide Clearance

VALVE	IN	MM
Intake	0.001-0.003	0.0254-0.0762
Exhaust	0.001-0.003	0.0254-0.0762

Special Tools

Description	Part Number	Qty.
CYLINDER HEAD HOLDING FIXTURE	B-49312	1
VALVE SPRING COMPRESSOR	HD-34736-B	1
CLEANING BRUSH	HD-34751	1
VALVE GUIDE SEAL INSTALLER	HD-45322	1

1. Secure cylinder head for service.
   a. Turn 10 mm end of **CYLINDER HEAD HOLDING FIXTURE (Part Number:B-49312)** into spark plug hole.
   b. Clamp tool in vise at a comfortable working position.

   NOTE

   Install all parts in their original location and position.

2. Install valve.
   a. Clean valve guide with **CLEANING BRUSH (Part Number:HD-34751)**.
   b. Apply a liberal amount of SCREAMIN' EAGLE ASSEMBLY LUBE to valve stem.
   c. Install the valve into the cylinder head.
   d. Spin the valve as it is installed to distribute the lubricant evenly.
   e. Remove the valve and apply a second coat of SCREAMIN' EAGLE ASSEMBLY LUBE to the valve stem. Install the valve.

   NOTICE

   Failure to install plastic capsule can cause the valve stem seal to catch the edge of the valve stem keeper groove. The resulting damage can cause leakage around the valve stem, excessive oil consumption and valve sticking. (00535b)

3. Install valve stem seal.
   a. Slide **VALVE GUIDE SEAL INSTALLER (Part Number:HD-45322)** over valve stem tip.
   b. Apply SCREAMIN' EAGLE ASSEMBLY LUBE to installer.
   c. See Figure 1. Slide **new** valve stem seal assembly over installer and down valve stem until seated against cylinder head casting.
   d. Remove installer from valve stem tip.

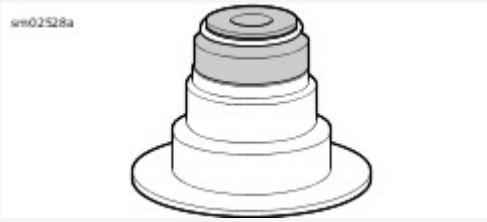

View interactive image

Figure 1. Valve Stem Seal Assembly

4. See **Engine → CYLINDER HEADS → Disassemble → Valve Components**. Install valve spring.
   a. Apply a liberal amount of SCREAMIN' EAGLE ASSEMBLY LUBE to valve stem tip and keeper groove.
   b. Install the valve spring (3) with the smaller diameter coils topside.
   c. Place the spring retainer (2) on top of the valve spring.
5. Install **new** keepers.
   a. compress valve spring with **VALVE SPRING COMPRESSOR (Part Number:HD-34736-B)**.
   b. Install the keepers.
   c. Slowly release valve spring compression.
   d. Tap the end of the valve stem once or twice with a soft mallet to make sure that tapered keepers are tightly seated.
6. Install remaining valves.
7. Install ACR. See **Electrical → AUTOMATIC COMPRESSION RELEASE (ACR)**.
8. See **Engine → CYLINDER HEADS → Disassemble → Cylinder Head Sensors**. Install knock sensor with screw (2).
   a. Rotate sensor housing up against head casting.
   b. Tighten to 17.6–23 N·m (13–17 ft-lbs).
9. Install temperature sensor (3). Tighten to 13.6–20.3 N·m (120–180 **in-lbs**).

1. Install pushrods, lifters and covers. See **Engine → PUSHRODS, LIFTERS AND COVERS**.
2. Install rocker arms. See **Engine → ROCKER ARMS**.
3. Install lower rocker covers. See **Engine → LOWER ROCKER COVERS**.
4. Install breathers. See **Engine → BREATHERS**.
5. Install upper rocker covers. See **Engine → UPPER ROCKER COVERS**.
6. Install spark plugs. See **Maintenance → CLEAN AND INSPECT SPARK PLUGS**.
7. Connect electrical connectors.
   a. **Rear cylinder:** Engine temperature sensor, knock sensor and ACR.
   b. **Front cylinder:** Knock sensor and ACR.
8. Install induction module. See **Fuel and Exhaust → INDUCTION MODULE**.
9. Install upper cooling lines. See **Engine → OIL COOLANT LINES**.
10. Install oil cooler upper screw and cover. See **Engine → OIL COOLER**.
11.

NOTE
See **Engine → FRONT ENGINE MOUNT → Remove and Install: Upper Front Engine Mount** for proper tightening sequence.

    Install left side engine mount. See **Engine → LEFT SIDE ENGINE MOUNT**.
12. Install upper front engine mount. See **Engine → FRONT ENGINE MOUNT**.
13. Install air cleaner backplate assembly. See **Fuel and Exhaust → AIR CLEANER BACKPLATE ASSEMBLY**.
14. Install air cleaner. See **Maintenance → INSPECT AIR FILTER**.
15. Install coil. See **Electrical → IGNITION COIL**.
16. Install spark plug cables. See **Electrical → SPARK PLUG CABLES**.
17. Install fuel tank. See **Fuel and Exhaust → FUEL TANK**.
18. Install seat. See **Chassis → SEAT**.
19. Connect negative battery cable. See **Electrical → POWER DISCONNECT**.

NOTE

Abrasive particles can damage machined surfaces or plug oil passageways. Clean parts before disassembly to prevent component damage.

1. Use low-pressure compressed air to clean exterior surfaces of engine.
2. Disconnect negative battery cable. See **Electrical → POWER DISCONNECT**.
3. Remove seat. See **Chassis → SEAT**.
4. Remove fuel tank. See **Fuel and Exhaust → FUEL TANK**.
5. Remove spark plug cables. See **Electrical → SPARK PLUG CABLES**.
6. Remove coil. See **Electrical → IGNITION COIL**.
7. Remove left side engine mount. See **Engine → LEFT SIDE ENGINE MOUNT**.
8. Remove air cleaner. See **Maintenance → INSPECT AIR FILTER**.
9. Remove air cleaner backplate assembly. See **Fuel and Exhaust → AIR CLEANER BACKPLATE ASSEMBLY**.
10. Remove upper front engine mount. See **Engine → FRONT ENGINE MOUNT**.
11. Remove oil cooler cover and upper screw. See **Engine → OIL COOLER**.
12. Remove upper cooling lines. See **Engine → OIL COOLANT LINES**.
13. Remove induction module. See **Fuel and Exhaust → INDUCTION MODULE**.
14. Disconnect electrical connectors.
    a. **Rear cylinder:** Engine temperature sensor, knock sensor and ACR.
    b. **Front cylinder:** Knock sensor and ACR.
15. Remove spark plugs. See **Maintenance → CLEAN AND INSPECT SPARK PLUGS**.
16. Remove upper rocker covers. See **Engine → UPPER ROCKER COVERS**.
17. Remove breathers. See **Engine → BREATHERS**.
18. Remove lower rocker covers. See **Engine → LOWER ROCKER COVERS**.
19. Remove rocker arms. See **Engine → ROCKER ARMS**.
20. Remove pushrods, lifters and covers. See **Engine → PUSHRODS, LIFTERS AND COVERS**.
21. Remove cylinder heads. See **Engine → CYLINDER HEADS**.

NOTE

Do not bend the cylinder studs.

1. Remove the cylinder.
    a. Raise the cylinder and place clean shop towels under the piston.
    b. Hold the piston to prevent touching the studs as it exits the cylinder.
    c. Lift cylinder clear of piston.
2. Slide plastic tubing, rubber hose or conduit over each cylinder stud to protect cylinder studs and piston from damage.
3. See **Figure 1**. Discard gasket (4).

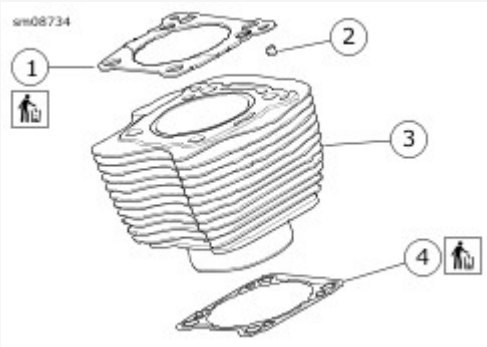

View interactive image

1	Head gasket
2	Dowel pin
3	Cylinder
4	Gasket

Figure 1. Cylinder Assembly

Special Tools

Description	Part Number	Qty.
PISTON RING COMPRESSOR	HD-96333-51F	1

NOTE

Front and rear cylinders are unique. Install them in the correct locations.

1. Prepare for cylinder installation.
   a. Install **new** base gasket to the crankcase.
   b. See [Engine → PISTONS → Assemble → Piston Ring Order of Assembly and Gap Alignment]. Verify piston ring alignment.
   c. Apply clean engine oil to piston, piston rings and cylinder bore.
   d. Rotate crankshaft until piston is at top dead center.
2. Remove protective covers from cylinder studs.
3. See Figure 1. Install the HD-52185 (PISTON SUPPORT PLATE) under piston.
4. Rotate crankshaft until piston skirt is centered and firmly seated on top of support plate.

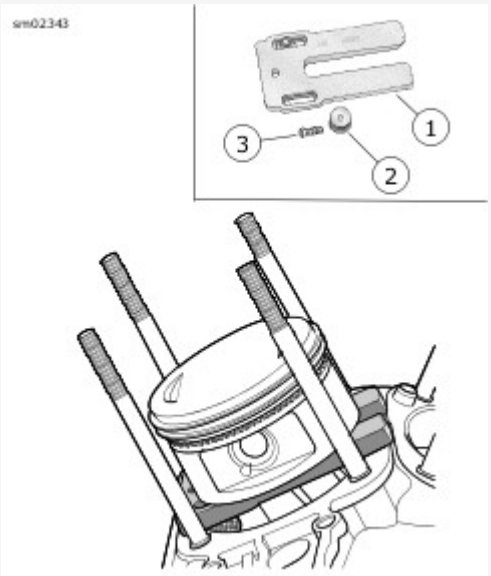

View interactive image

1	Support plate
2	Knobs
3	Screw

Figure 1. Piston Support Plate

5. See Figure 2. Install cylinder using PISTON RING COMPRESSOR (Part Number:HD-96333-51F).
   a. Align tool with the top of the band positioned between the top compression ring and the piston crown.
   b. Compress piston rings.

c. Align the indent in the cooling fins to the right side of the engine. Slide cylinder over the cylinder studs and piston until it rests on the top of the ring compressor.
d. Push down on the cylinder with a sharp, quick motion using the palms of both hands.
e. Remove pliers and piston support plate.
f. Remove shop towels from around the crankcase bore.
g. Push down on the cylinder until it is fully seated in the crankcase bore.
h. See **Figure 3**. Install HD-52020 (CYLINDER HOLD-DOWN NUTS) onto cylinder studs.

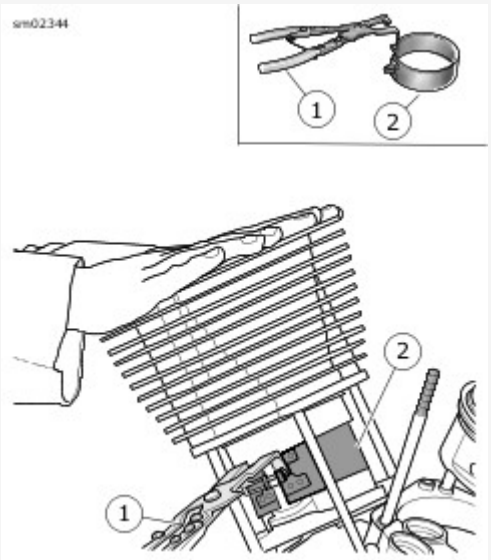

View interactive image

1	Pliers
2	Compressor band

Figure 2. Piston Ring Compressor

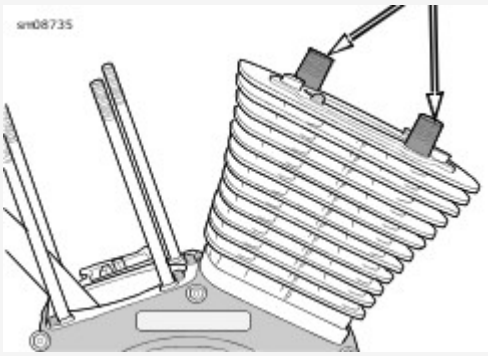

View interactive image

Figure 3. Install Threaded Cylinders to Studs

1. Clean all gasket material from the cylinder.
2. Clean parts in a non-volatile cleaning solution. Dry parts with low-pressure, compressed air.
3. Inspect the cylinder bore for defects or damage in the ring travel area.
    a. Light scratches that are not the length of the piston travel are considered normal. Hone pattern should travel through the scratches. This cylinder is fit for operation.
    b. Run a fingernail across the scratches. If a scratch catches a fingernail, the cylinder must be replaced.
    c. Scoring or broad bands that are the length of piston travel, or evidence that material transferred between the piston and cylinder, replace the cylinder.
4. Deglaze cylinders. See **Engine → CYLINDERS → Deglaze Cylinder**.
5. Verify that all oil holes are clean and open.
6. Carefully remove any nicks or burrs from the machined gasket surfaces.
7. Check the gasket surfaces for flatness. Measure with a straightedge and feeler gauge.
    a. Check head gasket surface of the cylinder. Record measurements.
    b. Check lower gasket surface of the cylinder. Record measurements.
    c. Discard cylinder if either gasket surface flatness is not within wear limits. See **Engine → SPECIFICATIONS**

1. Lightly swab the cylinder bore with a cloth dipped in clean engine oil.

NOTE

A precise 60 degree crosshatch pattern in the piston travel area is important.

NOTICE

The angular crosshatch pattern ensures an even flow of oil onto the cylinder walls and promotes longer cylinder, piston and ring life. An incorrect cross hatch pattern will result in insufficient oil retention and possible piston seizure and/or high oil consumption. (00536c)

2. Deglaze cylinder with a 240 grit flexible ball-type deglazing tool. Create a 60 degree crosshatch.

NOTICE

Failure to remove all abrasive particles may result in premature cylinder, piston and ring wear and engine failure. (00537c)

3. Thoroughly wash the cylinder bore with liquid dishwashing soap and hot water. Continue cleaning until a clean cloth shows no evidence of dirt or debris.
   a. Hot rinse the cylinder and dry with moisture free compressed air.
   b. Immediately apply a thin film of clean engine oil to a clean white paper towel and thoroughly wipe the inside of the cylinder.
   c. Repeat wiping process until a **new** towel remains white.

1. Install cylinder heads. See **Engine → CYLINDER HEADS**.
2. Install pushrods, lifters and covers. See **Engine → PUSHRODS, LIFTERS AND COVERS**.
3. Install rocker arms. See **Engine → ROCKER ARMS**.
4. Install lower rocker covers. See **Engine → LOWER ROCKER COVERS**.
5. Install breathers. See **Engine → BREATHERS**.
6. Install upper rocker covers. See **Engine → UPPER ROCKER COVERS**.
7. Install spark plugs. See **Maintenance → CLEAN AND INSPECT SPARK PLUGS**.
8. Connect electrical connectors.
   a. **Rear cylinder:** Engine temperature sensor, knock sensor and ACR.
   b. **Front cylinder:** Knock sensor and ACR
9. Install induction module. See **Fuel and Exhaust → INDUCTION MODULE**.
10. Install upper cooling lines. See **Engine → OIL COOLANT LINES**.
11. Install oil cooler upper screw and cover. See **Engine → OIL COOLER**.
12.

NOTE
See **Engine → FRONT ENGINE MOUNT → Remove and Install: Upper Front Engine Mount** for proper tightening sequence.

    Install left side engine mount. See **Engine → LEFT SIDE ENGINE MOUNT**.
13. Install upper front engine mount. See **Engine → FRONT ENGINE MOUNT**.
14. Install air cleaner backplate assembly. See **Fuel and Exhaust → AIR CLEANER BACKPLATE ASSEMBLY**.
15. Install air cleaner. See **Maintenance → INSPECT AIR FILTER**.
16. Install coil. See **Electrical → IGNITION COIL**.
17. Install spark plug cables. See **Electrical → SPARK PLUG CABLES**.
18. Install fuel tank. See **Fuel and Exhaust → FUEL TANK**.
19. Install seat. See **Chassis → SEAT**.
20. Connect negative battery cable. See **Electrical → POWER DISCONNECT**.

NOTE

Abrasive particles can damage machined surfaces or plug oil passageways. Clean parts before disassembly to prevent component damage.

1. Use low-pressure compressed air to clean exterior surfaces of engine.
2. Disconnect negative battery cable. See **Electrical → POWER DISCONNECT**.
3. Remove seat. See **Chassis → SEAT**.
4. Remove fuel tank. See **Fuel and Exhaust → FUEL TANK**.
5. Remove spark plug cables. See **Electrical → SPARK PLUG CABLES**.
6. Remove coil. See **Electrical → IGNITION COIL**.
7. Remove left side engine mount. See **Engine → LEFT SIDE ENGINE MOUNT**.
8. Remove air cleaner. See **Maintenance → INSPECT AIR FILTER**.
9. Remove air cleaner backplate assembly. See **Fuel and Exhaust → AIR CLEANER BACKPLATE ASSEMBLY**.
10. Remove upper front engine mount. See **Engine → FRONT ENGINE MOUNT**.
11. Remove oil cooler cover and upper screw. See **Engine → OIL COOLER**.
12. Remove upper cooling lines. See **Engine → OIL COOLANT LINES**.
13. Remove induction module. See **Fuel and Exhaust → INDUCTION MODULE**.
14. Disconnect electrical connectors.
    a. **Rear cylinder:** Engine temperature sensor, knock sensor and ACR.
    b. **Front cylinder:** Knock sensor and ACR.
15. Remove spark plugs. See **Maintenance → CLEAN AND INSPECT SPARK PLUGS**.
16. Remove upper rocker covers. See **Engine → UPPER ROCKER COVERS**.
17. Remove breathers. See **Engine → BREATHERS**.
18. Remove lower rocker covers. See **Engine → LOWER ROCKER COVERS**.
19. Remove rocker arms. See **Engine → ROCKER ARMS**.
20. Remove pushrods, lifters and covers. See **Engine → PUSHRODS, LIFTERS AND COVERS**.
21. Remove cylinder heads. See **Engine → CYLINDER HEADS**.
22. Remove cylinders. See **Engine → CYLINDERS**.

NOTE

It is not necessary to remove both piston pin retaining rings for piston removal.

1. Place clean shop towels over crankcase bore to prevent the piston pin retaining ring from falling into the crankcase.
2. See **Figure 1**. Using HD-51069-2 (PISTON PIN RETAINING RING INSTALLER) with HD-51069-17 (NOSE ADAPTER), remove and discard one piston pin retaining ring.
   a. Insert tool (1) into piston pin bore with claw on tool in slot of piston (2) (directly under retaining ring).
   b. Squeeze handles of tool together.
   c. Pull retaining ring from bore. Discard retaining ring.

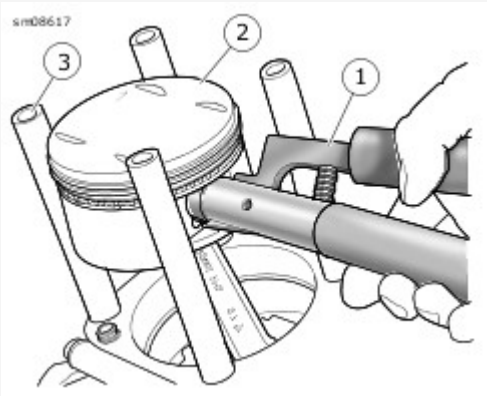

View interactive image

1	Piston pin retaining ring installer
2	Piston
3	Protective material over cylinder studs

Figure 1. Piston Pin Retaining Ring Removal

3. See **Figure 2**. Remove piston.
   a. Remove the piston pin using HD-42320-8 (PISTON PIN EXTRACTOR) with HD-42320-D (PISTON PIN REMOVER).
   b. Hold the connecting rod to prevent it from striking the crankcase. Remove the piston.
   c. Place a piece of foam-type water pipe insulation around connecting rod to prevent damage.
4. Identify piston location by marking piston pin boss underneath.

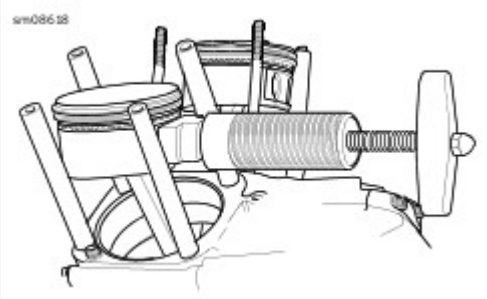

View interactive image

Figure 2. Remove Piston Pin

Special Tools

Description	Part Number	Qty.
NOSE ADAPTER	HD-51069-17	1
PISTON PIN RETAINING RING INSTALLER	HD-51069-2	1

WARNING

Failure to properly install and inspect piston pin retaining rings will result in engine failure and possible rear wheel lockup, which could result in death or serious injury. (03406a)

NOTE

Do not reuse piston pin retaining rings.

1. Install one **new** piston pin retaining ring using PISTON PIN RETAINING RING INSTALLER (Part Number:HD-51069-2) with NOSE ADAPTER (Part Number:HD-51069-17).
   a. See Figure 1. Slide retaining ring down nose of tool until it contacts claw.
   b. Center retaining ring at top of tool. Lightly squeeze handles of tool to capture retaining ring in claw.
   c. Tilt the retaining ring forward until the end gap contacts nose of tool.
   d. See Figure 3. Insert the tool (2) into the piston pin bore until claw is aligned with slot (3) in piston.
   e. Firmly push the tool into the piston pin bore until it bottoms.
   f. Release handles, Remove tool.
   g. See Figure 2. Verify that retaining ring end gap (3) is opposite from opening (2).
   h. Inspect the retaining ring to verify that it is fully seated in the groove.
2. Install piston.
   a. Verify that one retaining ring is installed in piston pin bore.
   b. Apply SCREAMIN' EAGLE ASSEMBLY LUBE to piston pin, piston pin bores and upper connecting rod bore.
   c. Remove water pipe insulation from connecting rod shank.
   d. See Figure 3. Place piston over rod end with the arrow (1) pointing toward the front of the engine.
   e. Insert piston pin through pin bore and upper connecting rod until it contacts retaining ring installed in opposite pin boss.
   f. Place clean shop towels over the cylinder and lifter bores.
3. See Figure 1. Install **new** retaining ring using PISTON PIN RETAINING RING INSTALLER (Part Number:HD-51069-2) with NOSE ADAPTER (Part Number:HD-51069-17).
   a. See Figure 2. Verify that retaining ring end gap (3) is opposite from opening (2).
   b. Inspect the retaining ring to verify that it is fully seated in the groove.

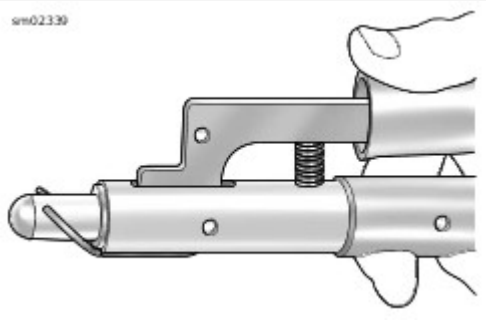

View interactive image

Figure 1. Aligning Retaining Ring

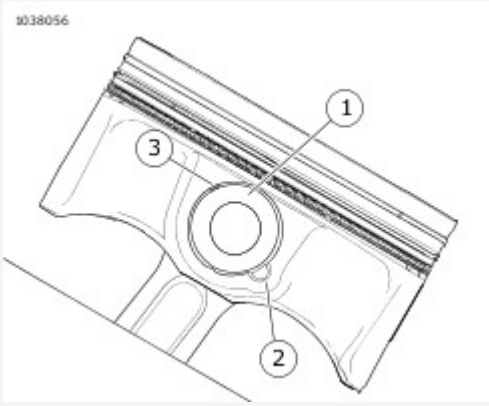

View interactive image

1	Piston pin
2	Retaining ring opening
3	End gap location

Figure 2. Pre-Installed Retaining Ring

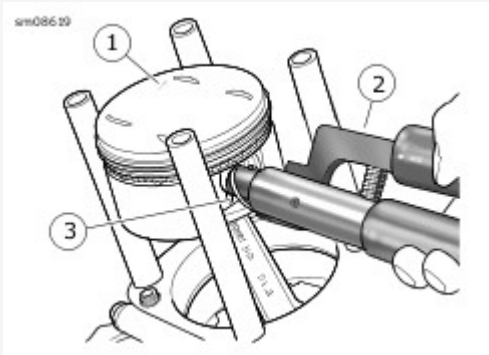

View interactive image

1	Arrow
2	Piston pin retaining ring installer
3	Slot

Figure 3. Install Pin Retaining Ring

1. Remove piston rings.

Clean

WARNING

Compressed air can pierce the skin and flying debris from compressed air could cause serious eye injury. Wear safety glasses when working with compressed air. Never use your hand to check for air leaks or to determine air flow rates. (00061a)

1.

NOTE

- Do not sandblast or glass bead blast pistons. Bead blasting rounds off ring lands.
- Do not damage or enlarge holes.
- Do not use a wire brush to clean oil holes.
- Avoid scratching sides of the piston ring grooves.

Remove all combustion deposits.

a. Soak pistons in hot water with dishwashing liquid or a cleaner designed to remove carbon and does not corrode aluminum.

b. Thoroughly rinse pistons.

c. Clean oil drain holes in oil control ring groove with a small bristle brush.

d. Dry parts with low-pressure, compressed air.

2. Verify that all oil holes are clean and open.

3.

NOTE

A portion of a compression ring properly ground to a sharp chisel-like edge works well to clean piston ring grooves.

Thoroughly clean the three piston ring grooves of all carbon deposits.

Inspect

1. Check piston running clearance.
   a. Insert a lightly oiled good piston pin into piston pin bore to feel for proper fit. The pin should slide in and out without binding, pivoting or rocking.
   b. Measure pin and pin bore diameters to determine running clearance. Replace piston and/or pin if clearance exceeds specified dimension.
   Dimension: 0.02 mm (0.0008 in)
2.

   NOTE

   Pistons with superficial wear marks, minor scratching or mild scoring are acceptable for use.

   Carefully inspect pistons for damage or excessive wear. Discard if any following conditions are found:
   a. Using dye penetrant, inspect pistons for surface cracks. Particularly examine area around pin bores, ring lands and oil drain holes beneath piston crown.

      NOTE

      Thoroughly wash usable pistons to remove traces of dye.

   b. Cracked, worn or bent ring lands.
   c. Cracks, gouges, deep scratches or heavy scoring.
   d. Evidence of burning, etching or melting.
   e. Marks or imprints caused by contact with valves.
3. Lightly file to remove any dings, nicks or burrs around edge of piston crown.
4. See **Figure 1**. Measure piston ring side clearance.
   a. Insert edge of a **new** ring into piston ring groove.
   b. Insert a feeler gauge between upper surface of ring and ring land.
   c. Repeat this check at several locations around piston.
   d. Discard piston if side clearance of either compression ring exceeds specified dimension.
   Dimension: 0.102 mm (0.004 in)
   e. Discard piston if oil control ring side clearance exceeds specified dimension.
   Dimension: 0.25 mm (0.010 in)
5.

   NOTE

   - Check piston clearance in the cylinder in which that piston will run. Cylinder must be deglazed. See Deglaze Cylinder in **Engine → CYLINDERS**.
   - This inspection is very heat-sensitive.
     1. Both piston and cylinder must be at room temperature before proceeding.
     2. Do not check piston running clearance immediately after honing or deglazing

cylinder.

3. Even holding the piston for too long can cause measurements to vary by as much as 0.0051 mm (0.0002 in).

- See upper frame of **Figure 2**. The coating has an oval-shaped opening (1) on each side of the piston for proper micrometer placement.
- See lower frame of **Figure 2**. Use a blade or ball anvil style micrometer to measure piston.

See **Figure 2**. Measure running clearance of pistons:

a. Measure piston skirt at bare aluminum openings (1).

b. Transfer measurement to dial bore gauge.

c. Measure at top and middle of piston ring travel zone. Measure parallel and perpendicular to crankshaft.

d. Replace piston and/or cylinder if running clearance exceeds service wear limit. See **Engine → SPECIFICATIONS**.

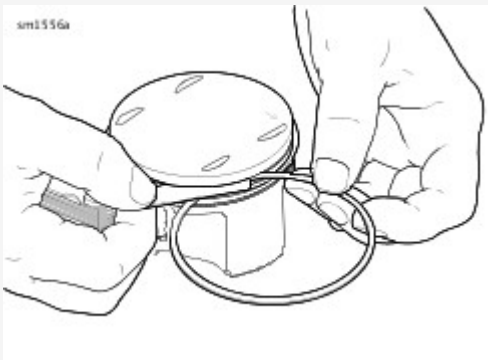

View interactive image

Figure 1. Measure Ring Clearance

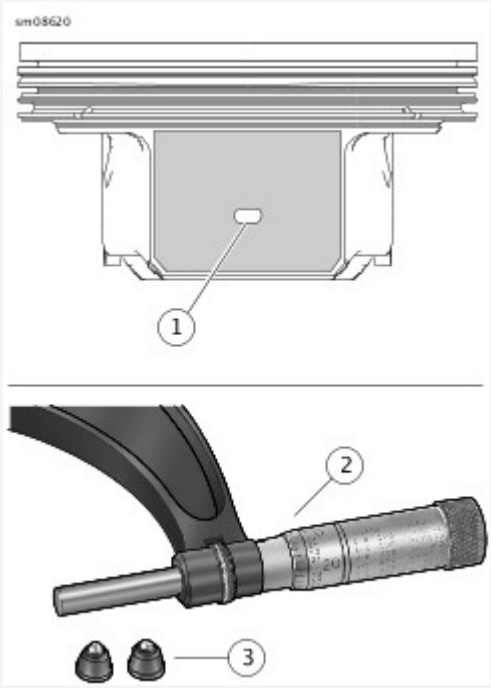

View interactive image

1	Bare aluminum opening
2	Micrometer
3	Spherical anvil adapters

Figure 2. Measure Piston Running Clearance

NOTE

- Always install **new** piston rings.
- Always deglaze the cylinder before installing **new** rings.
- Insufficient ring gap may cause the ends to touch at operating temperatures. This causes ring breakage, cylinder scuffing and/or piston seizure.
- Excessive ring gap causes high oil consumption and blow-by of exhaust gases resulting in contaminated oil and reduced engine efficiency.

1. See **Figure 1**. Check ring end gap of each ring before installing on piston.
   a. Insert piston upside down into cylinder. Apply even downward force to align piston ring.
   b. Measure the ring end gap with a feeler gauge. Refer to **Engine → SPECIFICATIONS → Engine → Piston**.

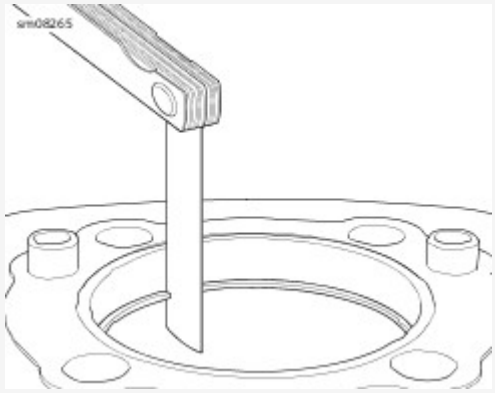

View interactive image

Figure 1. Measuring Ring Gap

NOTE

Piston ring position is identical for both pistons.

1. See Figure 1. Install three-piece oil control ring.
   a. Install expander ring (1) with ends facing up (see inset).
   b. Install bottom oil rail (2).
   c. Install top oil rail (3).

NOTE

- Position the "N" marking on the compression rings to the top of the piston.
- The top ring has chamfered corners on the ring face. The second ring has a sharp upper corner and a groove cut around the lower edge.

2. Install second compression ring (4).
3. Install top compression ring (5).
4. Verify that all piston rings rotate freely.
5. See Figure 2. Arrange gaps as shown.

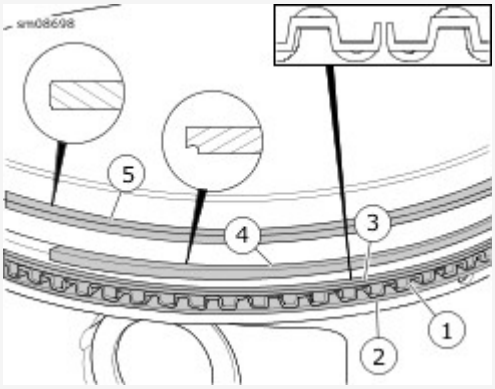

View interactive image

1	Expander ring
2	Bottom oil rail
3	Top oil rail
4	Second compression ring
5	Top compression ring

Figure 1. Piston Rings

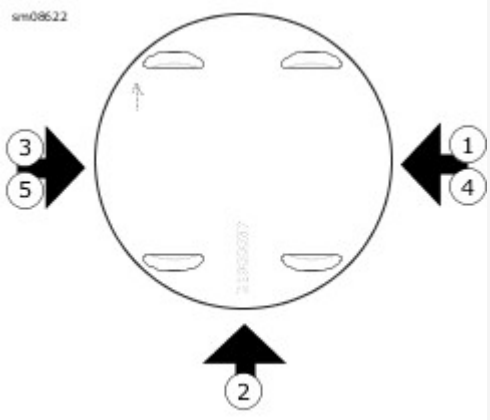

View interactive image

1	Expander ring
2	Bottom oil rail
3	Top oil rail
4	Second compression ring
5	Top compression ring

Figure 2. Piston Ring Order of Assembly and Gap Alignment

1. Install cylinders. See Engine → CYLINDERS.
2. Install cylinder heads. See Engine → CYLINDER HEADS.
3. Install pushrods, lifters and covers. See Engine → PUSHRODS, LIFTERS AND COVERS.
4. Install rocker arms. See Engine → ROCKER ARMS.
5. Install lower rocker covers. See Engine → LOWER ROCKER COVERS.
6. Install breathers. See Engine → BREATHERS.
7. Install upper rocker covers. See Engine → UPPER ROCKER COVERS.
8. Install spark plugs. See Maintenance → CLEAN AND INSPECT SPARK PLUGS.
9. Connect electrical connectors.
   a. **Rear cylinder:** Engine temperature sensor, knock sensor and ACR.
   b. **Front cylinder:** Knock sensor and ACR.
10. Install induction module. See Fuel and Exhaust → INDUCTION MODULE.
11. Install upper cooling lines. See Engine → OIL COOLANT LINES.
12. Install oil cooler upper screw and cover. See Engine → OIL COOLER.
13.

NOTE
See Engine → FRONT ENGINE MOUNT → Remove and Install: Upper Front Engine Mount for proper tightening sequence.

    Install left side engine mount. See Engine → LEFT SIDE ENGINE MOUNT.
14. Install upper front engine mount. See Engine → FRONT ENGINE MOUNT.
15. Install air cleaner backplate assembly. See Fuel and Exhaust → AIR CLEANER BACKPLATE ASSEMBLY.
16. Install air cleaner. See Maintenance → INSPECT AIR FILTER.
17. Install coil. See Electrical → IGNITION COIL.
18. Install spark plug cables. See Electrical → SPARK PLUG CABLES.
19. Install fuel tank. See Fuel and Exhaust → FUEL TANK.
20. Install seat. See Chassis → SEAT.
21. Connect negative battery cable. See Electrical → POWER DISCONNECT.

NOTE

Abrasive particles can damage machined surfaces or plug oil passageways. Clean parts before disassembly to prevent component damage.

1. Use low-pressure compressed air to clean exterior surfaces of engine.
2. Disconnect negative battery cable. See **Electrical → POWER DISCONNECT**.
3.

   NOTE

   Detach rider foot control bracket only if needed to remove exhaust system.

   Detach right side rider foot control bracket. See **Chassis → RIGHT FOOT CONTROLS**.
4. Remove exhaust system. See **Fuel and Exhaust → EXHAUST SYSTEM**.
5. Remove seat. See **Chassis → SEAT**.
6. Remove fuel tank. See **Fuel and Exhaust → FUEL TANK**.
7. Remove spark plug cables. **Electrical → SPARK PLUG CABLES**.
8. Remove upper front engine mount. See **Engine → FRONT ENGINE MOUNT**.
9. Remove oil cooler cover upper screw. See **Engine → OIL COOLER**.
10. Remove upper cooling lines. See **Engine → OIL COOLANT LINES**.
11. Disconnect electrical connectors.
    a. **Rear cylinder:** Engine temperature sensor, knock sensor and ACR.
    b. **Front cylinder:** Knock sensor and ACR
12. Remove upper rocker covers. See **Engine → UPPER ROCKER COVERS**.
13. Loosen rocker arm screws to relieve tension on pushrods. See **Engine → PUSHRODS, LIFTERS AND COVERS**.

Remove

1. See Figure 1. Remove camshaft cover.
   a. Remove screws (3).
   b. Remove camshaft cover (4).
   c. Discard gasket (5).

Install

1. See Figure 1. Install camshaft cover.
   a. Install **new** gasket (5).
   b. Install camshaft cover (4).
   c. Install screws (3). Hand tighten.
   d. See Figure 2. Tighten screws in the sequence shown.
      Torque: 10.2–13.6 N·m (90–120 **in-lbs**) *Camshaft cover screws*
2. See Figure 1. Install timer cover, if removed.
   a. Install timer cover (2).
   b. Install screws (1). Tighten.
      Torque: 2.8–4 N·m (25–35 **in-lbs**) *Camshaft timer cover screws*

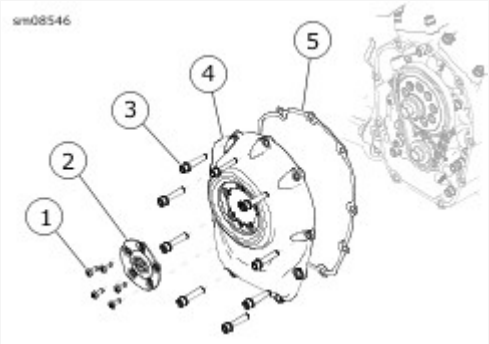

View interactive image

1	Screw (5)
2	Timer cover
3	Screw (9)
4	Camshaft cover
5	Gasket

Figure 1. Camshaft Cover

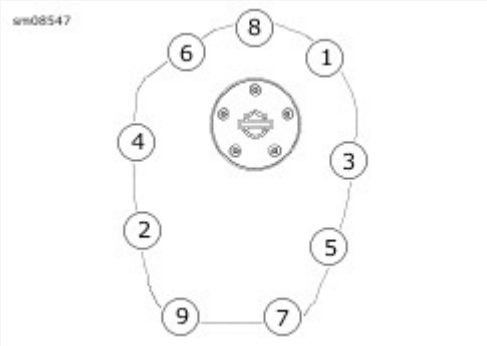

View interactive image

Figure 2. Cam Cover Tightening Sequence

Special Tools

Description	Part Number	Qty.
MAGNETIC LIFTER HOLDERS	93979-10	1
CRANKSHAFT/CAMSHAFT SPROCKET LOCKING TOOL	HD-47941	1

1. See Figure 1. Remove chain and sprockets.
   a. Mark one of the chain links with a colored marker.
   b. Remove cam chain tensioner fasteners (2). Remove cam chain tensioner (1).
   c. Install CRANKSHAFT/CAMSHAFT SPROCKET LOCKING TOOL (Part Number:HD-47941) between cam sprocket (9) and crank sprocket (8).
   d. Remove cam sprocket screw (4) and washer (3).
   e. Remove crank sprocket screw (5) and washer (6).
   f. Remove sprocket locking tool.
   g. Remove both sprockets and chain.
   h. Remove spacer (10).

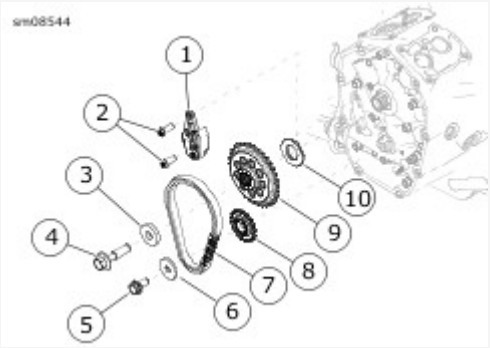

View interactive image

1	Cam chain tensioner
2	Screw (2)
3	Washer
4	Screw, cam sprocket
5	Screw, crank sprocket
6	Washer
7	Chain
8	Crank sprocket
9	Cam sprocket
10	Spacer

Figure 1. Camshaft Drive

2. Remove camshaft.
    a. See **Figure 2**. Support lifters using **MAGNETIC LIFTER HOLDERS (Part Number:93979-10)**.
    b. See **Figure 3**. Remove four screws (5).
    c. Remove screws (1).
    d. Remove cam support plate (2).
    e. Remove camshaft (3).
    f. Remove O-ring (4).

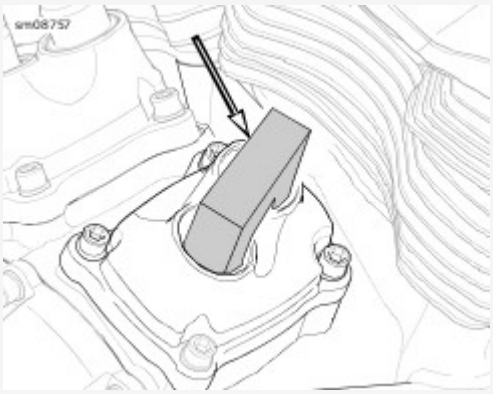

View interactive image

Figure 2. SCREAMIN' EAGLE Magnetic Lifter Holder

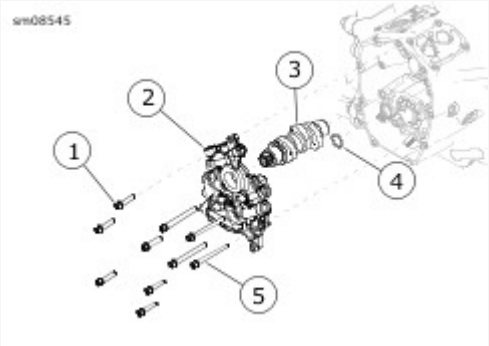

View interactive image

1	Support plate screw (6)
2	Cam support plate
3	Camshaft
4	O-ring
5	Oil pump screws (4)

Figure 3. Cam Support Plate

NOTE

See **Engine → SPECIFICATIONS** for specifications.

Camshaft

1. Inspect lobes for abnormal wear or discoloration.
2. Inspect bearing surfaces for scoring or discoloration.
3. Measure bearing journals.
4. If desired, remove and inspect lifters.
    a. Mark lifters so they can be installed in the same location and orientation as original.
    b. Remove lifters through camshaft cavity.
    c. Measure lifters.

Cam Support Plate

1. Measure the diameters of the camshaft and crankshaft bores.
2. Measure flatness of support plate.
3. Inspect gerotor area for excessive wear or deep grooves.
4. Verify that all oil passages are clean and open.

Cam Drive Components

1. Inspect sprockets and chain for wear.

Special Tools

Description	Part Number	Qty.
CRANKSHAFT/CAMSHAFT SPROCKET LOCKING TOOL	HD-47941	1

Consumables

Description	Part Number	Size
LOCTITE 262 HIGH STRENGTH THREADLOCKER AND SEALANT (RED)	94759-99	6 ml (¼ fl oz)
SCREAMIN' EAGLE ASSEMBLY LUBE	11300002	118 ml (4 fl oz)

1. Apply lube to all bearing surfaces and bearings.
   SCREAMIN' EAGLE ASSEMBLY LUBE (11300002)
2. See **Engine → CAM COMPARTMENT AND COMPONENTS → Remove → Cam Support Plate**. Install cam and cam support plate.
   a. Install camshaft in crankcase.
   b. Install **new** O-ring (4) into feed oil port of crankcase.
   c. Apply a thin film of lube to feed port spigot of cam support plate.
      SCREAMIN' EAGLE ASSEMBLY LUBE (11300002)
   d. Slide cam support plate over shafts and mate to crankcase.
   e. Verify that cam support plate is fully seated.
   f. Tighten all screws finger tight.
3. See **Figure 1**. Tighten screws in sequence.
   a. Tighten screws (1, 2).
      Torque: 1.4–6.8 N·m (12–60 **in-lbs**) *Oil pump screws, 1st torque*
   b. Rotate crankshaft one full revolution (360 degrees).
   c. Tighten screws (3-8) in sequence shown.
      Torque: 10.2–13.6 N·m (90–120 **in-lbs**) *Cam support plate screws*
   d. Final tighten four oil pump screws (1-2, 9-10) in sequence shown.
      Torque: 10.2–13.6 N·m (90–120 **in-lbs**) *Oil pump screws, final torque*

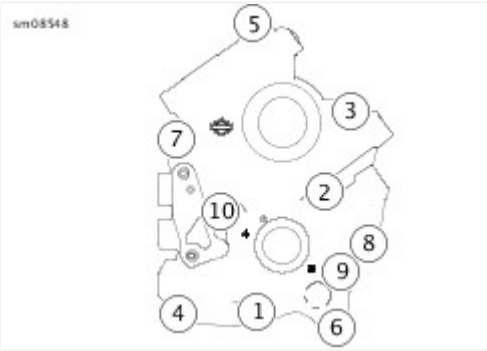

View interactive image

Figure 1. Cam Support Plate Tightening Sequence

NOTE

Check sprocket alignment if any of the following parts are **new**:

- Cam support plate
- Camshaft
- Cam sprocket
- Crankshaft sprocket
- Flywheel assembly

4. Check sprocket alignment.
   a. See **Engine → CAM COMPARTMENT AND COMPONENTS → Remove → Camshaft Drive**. Install original cam sprocket spacer (10).
   b. Install cam sprocket without chain using screw (4) and washer (3).
   c. Install crankshaft sprocket without chain using screw (5) and a smaller diameter flat washer from bulk inventory.
   d. Position locking tool between sprockets.

      Special Tool: **CRANKSHAFT/CAMSHAFT SPROCKET LOCKING TOOL** (HD-47941)

   e. Tighten both sprocket screws.
      Torque: 20.3 N·m (180 **in-lbs**) *Cam sprocket screw, alignment torque*
   f. Remove sprocket locking tool.
   g. Push on crankshaft and camshaft to eliminate end play.
   h. Place a straightedge across sprocket faces. Alignment offset must be to specification or less.
      Dimension: 0.23 mm (0.009 in)
   i. Remove cam sprocket.
   j. Install appropriate spacer (10) using **Table 1** as a guide.
   k. Check alignment with **new** spacer installed.
   l. Remove both sprockets.

Table 1. Cam Sprocket Spacers

PART NO.	IN	MM
25729-06	0.100	2.54
25731-06	0.110	2.79
25734-06	0.120	3.05
25736-06	0.130	3.30
25737-06	0.140	3.56
25738-06	0.150	3.81

1. Install camshaft drive.
   a. Apply a light film of lube to camshaft and crankshaft. **SCREAMIN' EAGLE ASSEMBLY LUBE (11300002)**
   b. Install cam sprocket spacer (10).
   c. See **Figure 2**. Assemble sprockets and chain with timing marks aligned. Verify that marked chain link is on the same side as the timing marks.
   d. Rotate camshaft until keyed spline is up.
   e. Rotate crankshaft until flat is up.
   f. Install sprockets and chain.
   g. Verify that timing marks on the sprockets are aligned.
   h. Apply threadlocker to screws. **LOCTITE 262 HIGH STRENGTH THREADLOCKER AND SEALANT (RED) (94759-99)**
   i. Apply a film of oil to bottom of both sprocket screw heads and washers.
   j. Loosely install screws and washers.

View interactive image

Figure 2. Timing Marks

2. Tighten sprocket screws.
   a. Position locking tool between sprockets.

      Special Tool: **CRANKSHAFT/CAMSHAFT SPROCKET**

LOCKING TOOL (HD-47941)

b. Tighten both sprocket screws.
   Torque: 20.3 N·m (15 ft-lbs) *Cam sprocket screw, 1st torque*
   Torque: 20.3 N·m (15 ft-lbs) *Crankshaft sprocket screw, 1st torque*

c. Loosen both screws one revolution (360 degrees).

d. Final tighten cam sprocket screw.
   Torque: 46.1 N·m (34 ft-lbs) *Cam sprocket screw, final torque*

e. Final tighten crank sprocket screw.
   Torque: 32.5 N·m (24 ft-lbs) *Crankshaft sprocket screw, final torque*

f. Remove sprocket locking tool.

3. Install primary cam chain tensioner. Tighten.
   Torque: 10.2–13.6 N·m (90–120 **in-lbs**) *Cam chain tensioner fasteners*

4. Apply lube to chain and sprockets.
   SCREAMIN' EAGLE ASSEMBLY LUBE (11300002)

1. Install rocker arms. See **Engine → ROCKER ARMS**.
2. Install upper rocker covers. See **Engine → UPPER ROCKER COVERS**.
3. Connect electrical connectors.
   a. **Rear cylinder:** Engine temperature sensor, knock sensor and ACR.
   b. **Front cylinder:** Knock sensor and ACR.
4. Install upper cooling lines. See **Engine → OIL COOLANT LINES**.
5. Install oil cooler cover and upper screw. See **Engine → OIL COOLER**.
6. Install upper front engine mount. See **Engine → FRONT ENGINE MOUNT**.
7. Install spark plug cables. **Electrical → SPARK PLUG CABLES**.
8. Install fuel tank. See **Fuel and Exhaust → FUEL TANK**.
9. Install seat. See **Chassis → SEAT**.
10. Install exhaust system. See **Fuel and Exhaust → EXHAUST SYSTEM**.
11. Attach right side foot control bracket, if removed. See **Chassis → RIGHT FOOT CONTROLS**.
12. Connect negative battery cable. See **Electrical → POWER DISCONNECT**.

Special Tools

Description	Part Number	Qty.
CAMSHAFT NEEDLE BEARING REMOVER/INSTALLER	HD-42325-C	1

Remove

1. See Figure 1. Remove camshaft bearing using components of CAMSHAFT NEEDLE BEARING REMOVER/INSTALLER (Part Number:HD-42325-C).
2. Hold the flat on the HD-42325-12A (COLLET). Turn hex at end to expand collet.
3. Turn hex nut to remove bearing.

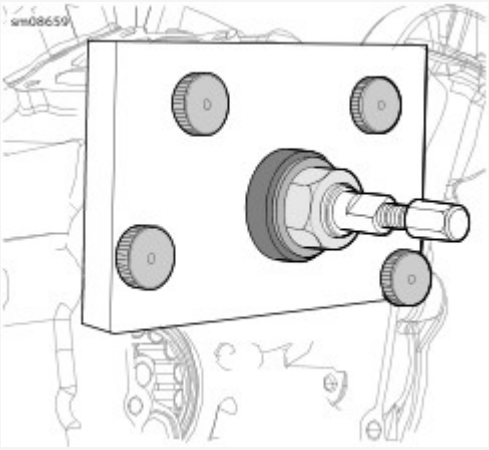

View interactive image

Figure 1. Remove Camshaft Needle Bearing

Install

1. Calculate bearing installed depth.
   a. Measure thickness of HD-42325-4 (SUPPORT PLATE).
   b. Add support plate thickness to 3.737 in (94.92 mm). Record this value.
2. See Figure 1. Install bearing using HD-42325-7A (CAMSHAFT NEEDLE BEARING INSTALLER).
   a. Place **new** needle bearing on installer with letters facing installer (visible from cam chest when installed).
   b. Install support plate.
3. See Figure 2. Turn forcing screw to press needle bearing to depth calculated earlier ± 0.020 in (0.54 mm).
   a. Do not exceed torque specification during needle bearing installation or damage to crankcase will occur..
   Torque: 33.9 N·m (25 ft-lbs) *Cam needle bearing installation maximum torque*

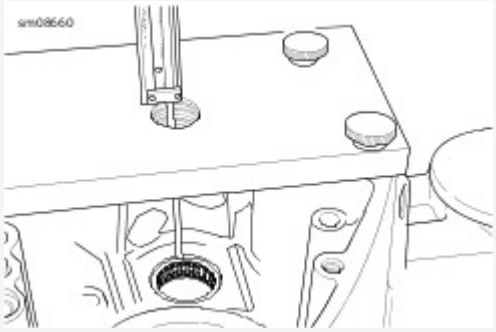

View interactive image

Figure 2. Measure from Top of Support Plate to Edge of Needle Bearing

NOTE

Abrasive particles can damage machined surfaces or plug oil passageways. Clean parts before disassembly to prevent component damage.

1. Use low-pressure compressed air to clean exterior surfaces of engine.
2. Disconnect negative battery cable. See **Electrical → POWER DISCONNECT**.
3.

   NOTE

   Detach rider foot control bracket only if needed to remove exhaust system.

   Detach right side rider foot control bracket. See **Chassis → RIGHT FOOT CONTROLS**.
4. Remove exhaust system. See **Fuel and Exhaust → EXHAUST SYSTEM**.
5. Remove seat. See **Chassis → SEAT**.
6. Remove fuel tank. See **Fuel and Exhaust → FUEL TANK**.
7. Remove spark plug cables. **Electrical → SPARK PLUG CABLES**.
8. Remove upper front engine mount. See **Engine → FRONT ENGINE MOUNT**.
9. Remove oil cooler cover and upper screw. See **Engine → OIL COOLER**.
10. Remove upper cooling lines. See **Engine → OIL COOLANT LINES**.
11. Disconnect electrical connectors.
    a. **Rear cylinder:** Engine temperature sensor, knock sensor and ACR.
    b. **Front cylinder:** Knock sensor and ACR.
12. Remove upper rocker covers. See **Engine → UPPER ROCKER COVERS**.
13. Loosen rocker arm screws to relieve tension on pushrods. See **Engine → PUSHRODS, LIFTERS AND COVERS**.
14. Remove camshaft cover and cam support plate. See **Engine → CAM COMPARTMENT AND COMPONENTS**.

1. See Figure 1. Remove oil pump assembly from camshaft compartment.
2. Discard O-ring (5).
3. **If equipped:** Discard oil seal (7).

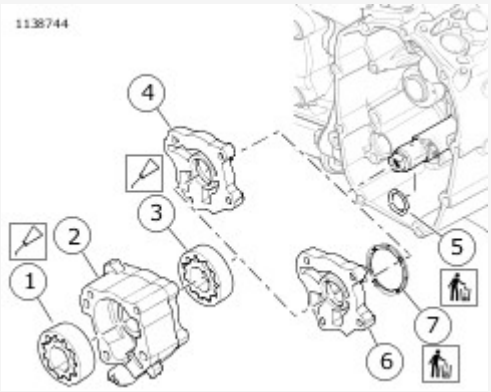

View interactive image

1	Feed gerotor set
2	Oil pump housing
3	Scavenge gerotor set
4	Back housing (early model oil-cooled)
5	Scavenge port O-ring
6	Back housing (late model oil-cooled and all twin-cooled)
7	Oil seal (late model oil-cooled and all twin-cooled)

Figure 1. Oil Pump

1. See Engine → Oil Pump → Remove → Oil Pump. Remove gerotors (1, 3).
2. See Figure 1. Remove pressure relief valve.
   a. Hold spring (1) compressed.
   b. Drive out roll pin (3).
   c. Carefully release spring pressure.
   d. Remove spring and piston (2).
3. Clean parts in a non-volatile cleaning solution.
4. Dry parts using low-pressure compressed air.
5. Inspect housing.
   a. Verify oil holes are clean and open.
   b. Inspect relief valve piston and seat for damage.
   c. Inspect oil pump housing bores for scoring, gouging or cracking.
   d. See Engine → Oil Pump → Remove → Oil Pump. Inspect for grooves or scratches on cam support plate and back housing (4).
6. See Figure 2. Check gerotor wear.
   a. Check lobes of gerotors for damage.
   b. Mesh gerotor sets together.
   c. Measure distance between tips of lobes on inner and outer feed gerotor set.
   d. Measure distance between tips of lobes on inner and outer scavenge gerotor set.
   e. Refer to Table 1. Compare measurements to maximum specification.
   f. Measure and compare thickness of each rotor in feed gerotor set.
   g. Measure and compare thickness of each rotor in scavenge gerotor set.
   h. Refer to Table 1. Compare measurements to maximum specification.

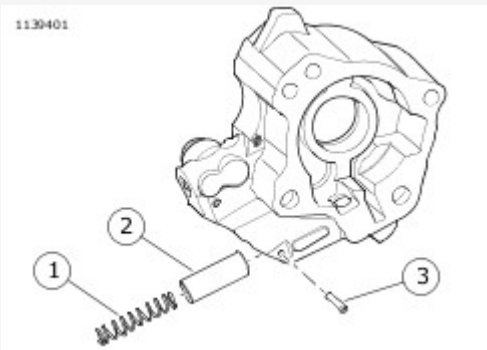

View interactive image

1	Spring
2	Piston

3	Roll pin

Figure 1. Oil Pressure Relief Valve

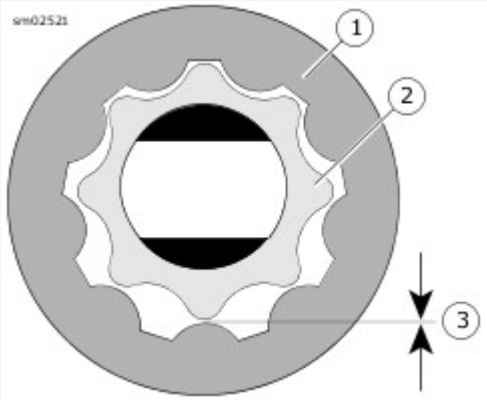

View interactive image

1	Outer gerotor
2	Inner gerotor
3	Wear limit

Figure 2. Measure Gerotor Sets for Wear

Table 1. Oil Pump Feed and Scavenge Gerotor Tolerances

MAXIMUM LOBE CLEARANCE	MAXIMUM THICKNESS DIFFERENCE
0.1 mm (0.004 in)	0.025 mm (0.001 in)

Consumables

Description	Part Number	Size
SCREAMIN' EAGLE ASSEMBLY LUBE	11300002	118 ml (4 fl oz)

1. Install pressure relief valve.
   a. See **Engine → Oil Pump → Disassemble and Inspect → Oil Pressure Relief Valve**. Apply assembly lube to piston (2) and bore.
      SCREAMIN' EAGLE ASSEMBLY LUBE (11300002)
   b. Install piston and spring (1).
   c. Hold spring compressed and install roll pin (3).

Consumables

Description	Part Number	Size
SCREAMIN' EAGLE ASSEMBLY LUBE	11300002	118 ml (4 fl oz)

1. Lubricate all parts with assembly lube during assembly.
   SCREAMIN' EAGLE ASSEMBLY LUBE (11300002)
2. See **Engine → Oil Pump → Remove → Oil Pump**. Install back housing (4) and scavenge gerotor set (3) onto crankshaft.
3. Install **new** O-ring (5) in crankcase scavenge port.
4. Apply assembly lube to scavenge port spigot.
   SCREAMIN' EAGLE ASSEMBLY LUBE (11300002)
5. Slide oil pump housing (4) onto crankshaft while fitting scavenge port into O-ring.
   a. Firmly push on oil pump housing to fully seat.
6. Install feed gerotor set (1).

1. Install cam support plate and camshaft cover. See **Engine → CAM COMPARTMENT AND COMPONENTS**.
2. Install rocker arms. See **Engine → ROCKER ARMS**.
3. Install upper rocker covers. See **Engine → UPPER ROCKER COVERS**.
4. Connect electrical connectors.
   a. **Rear cylinder:** Engine temperature sender, knock sensor and ACR.
   b. **Front cylinder:** Knock sensor and ACR.
5. Install upper cooling lines. See **Engine → OIL COOLANT LINES**.
6. Install oil cooler upper screw and cover. See **Engine → OIL COOLER**.
7. Install upper front engine mount. See **Engine → FRONT ENGINE MOUNT**.
8. Install spark plug cables. **Electrical → SPARK PLUG CABLES**.
9. Install fuel tank. See **Fuel and Exhaust → FUEL TANK**.
10. Install seat. See **Chassis → SEAT**.
11. Install exhaust system. See **Fuel and Exhaust → EXHAUST SYSTEM**.
12. Attach right side foot control bracket, if removed. See **Chassis → RIGHT FOOT CONTROLS**.
13. Connect negative battery cable. See **Electrical → POWER DISCONNECT**.

Prepare

1. Secure motorcycle on lift. See Maintenance → GENERAL.
2. Disconnect negative battery cable. See Electrical → POWER DISCONNECT.
3. Remove saddlebags, if equipped. See Chassis → SADDLEBAGS.
4. Remove seat. See Chassis → SEAT.
5. Remove fuel tank. See Fuel and Exhaust → FUEL TANK.
6. Remove battery. See Maintenance → INSPECT BATTERY.
7. Remove battery tray. See Electrical → BATTERY TRAY
8. Remove exhaust system. See Fuel and Exhaust → EXHAUST SYSTEM.
9. Remove air cleaner. See Maintenance → INSPECT AIR FILTER.
10. Remove air cleaner backplate assembly. See Fuel and Exhaust → AIR CLEANER BACKPLATE ASSEMBLY.
11. Disconnect front oil hose from oil cooler. See Engine → OIL COOLANT LINES.
12. Drain engine oil and discard filter. See Maintenance → REPLACE ENGINE OIL AND FILTER.
13. Remove voltage regulator. See Electrical → VOLTAGE REGULATOR.
    a. Release stator harness anchor.
14. Disconnect CKP sensor. See Electrical → CRANKSHAFT POSITION SENSOR (CKP).
15. Disconnect jiffy stand sensor, if equipped. See Electrical → JIFFY STAND SENSOR (JSS).
16. Disconnect oil pressure sender. See Electrical → OIL PRESSURE SWITCH.
17. Disconnect clutch cable. See Chassis → CLUTCH CONTROL.
18. Remove starter. See Electrical → STARTER.
19. Remove primary chaincase. See Drive and Transmission → PRIMARY CHAINCASE HOUSING.
20. Remove drive belt from transmission pulley. See Drive and Transmission → DRIVE BELT.
21. Remove rear splash guard. See Chassis → REAR FORK.
22. Disconnect line from oil check valve. See Engine → OIL COOLER.
23. Release main harness and brake line from lower frame rail.
    a. Allow to hang below frame.
24. Remove right foot support bracket. See Chassis → RIGHT FOOT CONTROLS.
25. Remove brake pedal master cylinder assembly. See Chassis → REAR BRAKE MASTER CYLINDER.
    a. Place on work surface. Wrap rear master cylinder with protective padding.
26. Disconnect VSS. See Electrical → VEHICLE SPEED SENSOR (VSS).

27. Disconnect ACRs. See **Electrical → AUTOMATIC COMPRESSION RELEASE (ACR)**.
28. Disconnect ground cable from transmission case. Do this only if removing as one assembly or transmission case separately.
29. Disconnect knock sensors. See **Electrical → KNOCK SENSOR (KS)**.
30. Disconnect cylinder temperature sensor. See **Electrical → ENGINE TEMPERATURE (ET) SENSOR**.
31. Remove USB caddy. See **Electrical → USB CADDY**.
32. Disconnect spark plug cables. See **Electrical → SPARK PLUG CABLES**.
33. Remove ignition coil. See **Electrical → IGNITION COIL**.
34. Remove left side engine mount (coil bracket). See **Engine → LEFT SIDE ENGINE MOUNT**.

Remove

1. Wrap rocker covers and frame rails with protective padding or tape.
2. Support powertrain.
   a. Support engine using FAT JACK (PART NUMBER: HD-45968) or similar.
   b. Place support under crankcase.
   c. Support transmission using FAT JACK (PART NUMBER: HD-45968) or similar.
   d. Place support under frame.
3. Remove pivot shaft. See **Chassis → REAR FORK**
4. Remove front engine mount. See **Engine → FRONT ENGINE MOUNT**
5. Remove lower front engine mount bolt. See **Engine → FRONT ENGINE MOUNT**
6. Remove powertrain from chassis.
   a. Slide transmission case as far back as possible.
   b. Remove engine from right side.
7. Remove induction module assembly. See **Fuel and Exhaust → INDUCTION MODULE**

Install

1. Make sure motorcycle is secure on lift.
2. Install induction module assembly. See **Fuel and Exhaust → INDUCTION MODULE**
3. Install powertrain into chassis.
   a. Install engine from right side.
   b. Position in chassis.
4. Install lower front engine mount. See **Engine → FRONT ENGINE MOUNT**
5. Install front stabilizer link and bracket. See **Engine → FRONT ENGINE MOUNT**
6. Install pivot shaft. See **Chassis → REAR FORK**
7. Remove powertrain supports.
8. Remove protective padding/tape from rear master cylinder, rocker covers and frame rails.

Complete

1. Install left side engine mount (coil bracket). See Engine → LEFT SIDE ENGINE MOUNT.
2. Install ignition coil. See Electrical → IGNITION COIL.
3. Connect spark plug cables. See Electrical → SPARK PLUG CABLES.
4. Install USB caddy. See Electrical → USB CADDY.
5. Connect cylinder temperature sensor. See Electrical → ENGINE TEMPERATURE (ET) SENSOR.
6. Connect knock sensors. See Electrical → KNOCK SENSOR (KS).
7. Connect ground cable to transmission case.
8. Connect ACRs. See Electrical → AUTOMATIC COMPRESSION RELEASE (ACR).
9. Connect VSS. See Electrical → VEHICLE SPEED SENSOR (VSS).
10. Install brake pedal master cylinder assembly. See Chassis → REAR BRAKE MASTER CYLINDER.
11. Install right foot support bracket. See Chassis → RIGHT FOOT CONTROLS.
    a. Secure main harness and brake line to lower frame rail.
12. Connect line to oil check valve. See Engine → OIL COOLER
13. Install rear splash guard. See Chassis → REAR FORK
14. Install drive belt. See Drive and Transmission → DRIVE BELT.
15. Install primary chaincase. See Drive and Transmission → PRIMARY CHAINCASE HOUSING.
16. Install starter. See Electrical → STARTER.
17. Install and adjust clutch cable. See Chassis → CLUTCH CONTROL.
18. Connect oil pressure sender. See Electrical → OIL PRESSURE SWITCH.
19. Connect jiffy stand sensor, if equipped. See Electrical → JIFFY STAND SENSOR (JSS).
20. Connect CKP sensor. See Electrical → CRANKSHAFT POSITION SENSOR (CKP).
21. Install voltage regulator. See Electrical → VOLTAGE REGULATOR.
22. Fill engine oil and install new filter. See Maintenance → REPLACE ENGINE OIL AND FILTER.
23. Connect upper cooling lines. See Engine → OIL COOLANT LINES.
24. Install air cleaner backplate assembly. Fuel and Exhaust → AIR CLEANER BACKPLATE ASSEMBLY.
25. Install air cleaner. See Maintenance → INSPECT AIR FILTER.
26. Install exhaust system. See Fuel and Exhaust → EXHAUST SYSTEM.
27. Install battery tray. See Electrical → BATTERY TRAY.

28. Install battery. See **Maintenance → INSPECT BATTERY**.
29. Install fuel tank. See **Fuel and Exhaust → FUEL TANK**.
30. Install seat. See **Chassis → SEAT**.
31. Install saddlebags, if equipped. See **Chassis → SADDLEBAGS**.
32. Connect negative battery cable. See **Electrical → POWER DISCONNECT**.
33. Run motorcycle until engine is at normal operating temperature.
    a. Check clutch operation. Adjust if needed.
    b. Check instrument lamps.
    c. Check for leaks.
    d. Check engine oil level (hot).

1. Remove engine. See **Engine → REPLACE ENGINE**.
2.

NOTE
Abrasive particles can damage machined surfaces or plug oil passageways. Clean parts before disassembly to prevent component damage.

   Use low-pressure compressed air to clean exterior surfaces of engine.
3. Remove spark plugs. See **Maintenance → CLEAN AND INSPECT SPARK PLUGS**.
4. Remove upper rocker covers. See **Engine → UPPER ROCKER COVERS**.
5. Remove breathers. See **Engine → BREATHERS**.
6. Remove lower rocker covers. See **Engine → LOWER ROCKER COVERS**.
7. Remove rocker arms. See **Engine → ROCKER ARMS**.
8. Remove pushrods, lifters and covers. See **Engine → PUSHRODS, LIFTERS AND COVERS**.
9. Remove cylinder heads. See **Engine → CYLINDER HEADS**.
10. Remove cylinders. See **Engine → CYLINDERS**.
11. Remove pistons. See **Engine → PISTONS**.
12. Remove cam cover and cam compartment components. See **Engine → CAM COMPARTMENT AND COMPONENTS**.
13. Remove oil pump. See **Engine → Oil Pump**.

1. Remove oil pump from crankshaft.

> **CAUTION**
>
> Do not rotate crankcase half in engine stand when flywheel is installed. The flywheel assembly can fall out, resulting in parts damage or moderate injury. (00552c)

2. Position crankcase with cam compartment facing down.

> **NOTE**
>
> Never move or lift the crankcase by grasping the cylinder studs.

3.

> **NOTE**
>
> Use care to not allow the balancer gears to raise when lifting off left crankcase. The balancer gears can disengage the crankshaft gear, allowing the balancer scissor gear to unload. Rotating the scissor gear back into position is difficult.

   Separate crankcase halves.

   a. See **Figure 1**. Remove 12 crankcase screws in the sequence shown.
   b. Separate case halves.
   c. See **Figure 2**. Lift left crankcase half (2) off end of crankshaft.

4. Remove two dowel pins in split line face of right case half.

> **NOTE**
>
> HD-52065 (Balancer Gear Alignment Tool) must be installed before removing balancer.

5. Remove balancers (4).
   a. Rotate gear teeth slightly with a screwdriver to allow tool installation.
   b. Install HD-52065 (Balancer Gear Alignment Tool).
   c. Lift balancer from crankcase.
6. Remove flywheel assembly (3).

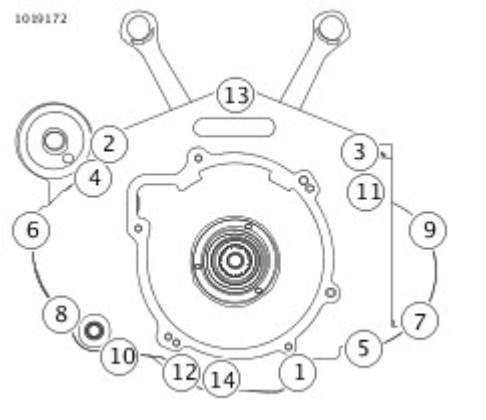

View interactive image

Figure 1. Crankcase Torque Sequence

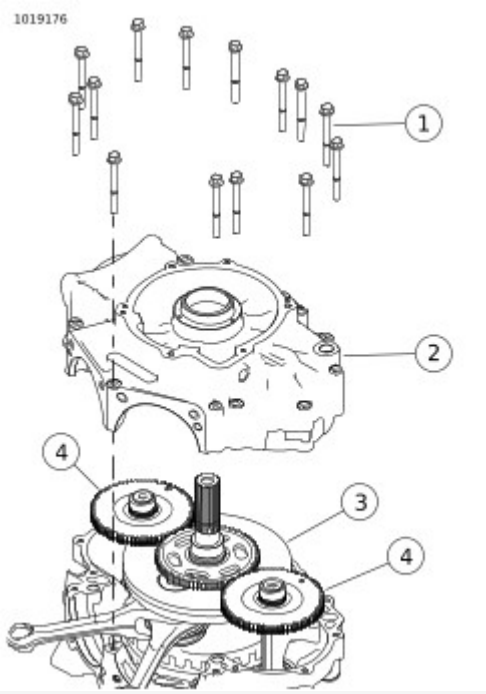

View interactive image

1	Screw (14)
2	Left crankcase
3	Flywheel assembly
4	Balancer

Figure 2. Separate Crankcase Halves

1. Remove all gasket material from the crankcase flanges.
2. Clean all parts in a non-volatile cleaning solution or solvent.

> **WARNING**
>
> Compressed air can pierce the skin and flying debris from compressed air could cause serious eye injury. Wear safety glasses when working with compressed air. Never use your hand to check for air leaks or to determine air flow rates. (00061a)

3. Dry parts with moisture-free compressed air.
4. Verify that all oil holes are clean and open.
5. Check ring dowels for looseness, wear or damage. Replace if necessary.
6. Use a file to carefully remove any nicks or burrs from machined surfaces.
7. Clean out tapped holes and clean up damaged threads.
8. Check the top of the crankcase for flatness with a straightedge and feeler gauge. Replace if warped.
9. Spray all machined surfaces with clean engine oil.
10. Inspect crankshaft/flywheel assembly. See **Engine → FLYWHEEL AND CONNECTING RODS**.

Special Tools

Description	Part Number	Qty.
CRANKSHAFT GUIDE	HD-42326-B	1
LEFT MAIN BEARING OIL SEAL INSTALLATION TOOL	HD-52064	1
SPROCKET SHAFT BEARING INSTALLER	HD-97225-55C	1

Consumables

Description	Part Number	Size
HARLEY-DAVIDSON HIGH PERFORMANCE SEALANT - GRAY	99650-02	56 ml (2 fl oz)
SCREAMIN' EAGLE ASSEMBLY LUBE	11300002	118 ml (4 fl oz)

1. Position right crankcase with cam compartment facing down.
2. Install flywheel assembly.
   a. Work a liberal amount of SCREAMIN' EAGLE ASSEMBLY LUBE into both main bearings and balancer bearings.
   b. Slide crankshaft guide onto flywheel sprocket shaft.

      Special Tool: **CRANKSHAFT GUIDE** (HD-42326-B)

   c. Slide flywheel assembly into right crankcase half.
   d. Remove crankshaft guide tool.
3. **NOTE**

   - See **Figure 1**. When aligning timing marks match dash to dash and circle to circle.
   - Timing marks may not align exactly. Align to the closest tooth.

   See **Figure 1**. Install balancers.
   a. Rotate flywheel so crankpin is at BDC.
   b. Install balancer while aligning timing marks (2).
   c. Repeat with remaining balancer.
4. Remove alignment tool.
   a. Rotate gear teeth slightly with a screwdriver to unload pressure on tool.
   b. Remove tool.
5. **NOTE**

The balancer shafts may splay away from the crankshaft. Wiggle crankcase during installation to help fully seat balancer shaft in bearing.

Mate crankcase halves.

a. Verify that both dowel pins are installed in split line face of right case half.
b. See Figure 2. Apply a bead of sealant to specification to the split line face of right crankcase half.
   Length/Dimension/Distance: 1.52 mm (0.06 in)
   HARLEY-DAVIDSON HIGH PERFORMANCE SEALANT - GRAY (99650-02)
c. Place crankshaft guide over end of crankshaft until it contacts shoulder on shaft.

   Special Tool: CRANKSHAFT GUIDE (HD-42326-B)

d. Mate case halves. Keep crankcase splitline parallel as left crankcase is lowered into place.
e. Wiggle crankcase during installation to help fully seat balancer shafts in bearing.
f. Remove crankshaft guide.

6. See Engine → CRANKCASE → Disassemble → Crankcase Torque Sequence. Install 14 crankcase screws.
   a. Finger-tighten each screw.
   b. Tighten screws in sequence shown
      Torque: 13.6 N·m (120 **in-lbs**) *Crankcase screws, first torque*
   c. Loosen, then following the same sequence, final tighten.
      Torque: 20.3–25.8 N·m (15–19 ft-lbs) *Crankcase screws, last torque*
7. Rotate crankcase assembly so sprocket shaft is pointing straight up.
8. Install thrust washer on sprocket shaft with "THIS SIDE OUT" facing out (and the chamfer inboard). If using original part without markings, position to preserve existing wear pattern.
9. See Figure 3. Install **new** sprocket shaft oil seal using components from the following tools.

   Special Tool: SPROCKET SHAFT BEARING INSTALLER (HD-97225-55C)

   Special Tool: LEFT MAIN BEARING OIL SEAL INSTALLATION TOOL (HD-52064)

   a. Verify that lip garter spring is in place on both sides of oil seal.
   b. Install sprocket shaft spacer.
   c. Install oil seal.
10. Rotate crankcase so that cam compartment is facing up.
11. Apply a liberal amount of lube to the main bearing. Rotate flywheel assembly to distribute lube.
    SCREAMIN' EAGLE ASSEMBLY LUBE (11300002)

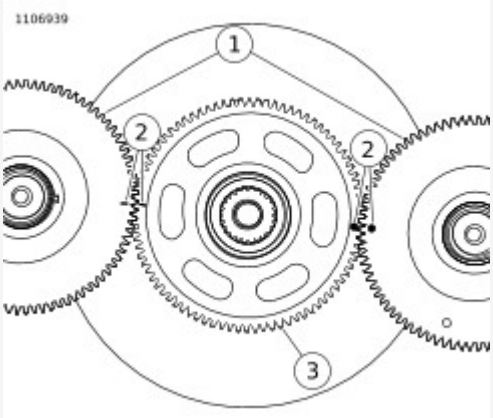

View interactive image

1	Balancer gears
2	Timing marks
3	Flywheel gear

Figure 1. Balancer Timing Marks

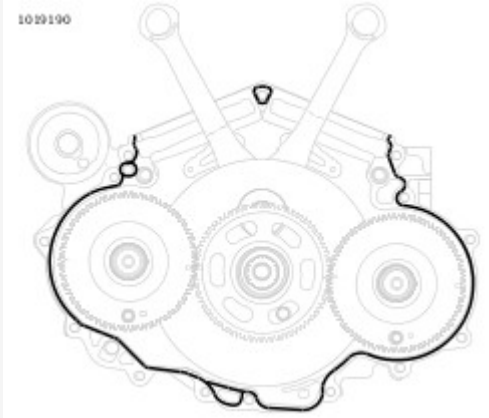

View interactive image

Figure 2. Sealant

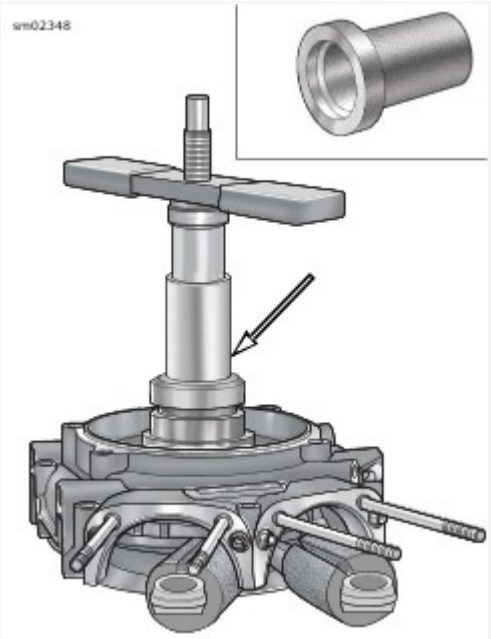

View interactive image

Figure 3. Sprocket Shaft Oil Seal Installer

Special Tools

Description	Part Number	Qty.
MAIN BEARING REMOVER AND INSTALLER	HD-52071	1

Consumables

Description	Part Number	Size
LOCTITE 222 LOW STRENGTH THREADLOCKER (PURPLE)	99811-97	6 ml (¼ fl oz)

Remove Main Bearing

1. **NOTE**

   Never move or lift crankcase by grasping cylinder studs.

   See Figure 1. Remove bearing.

   Special Tool: MAIN BEARING REMOVER AND INSTALLER (HD-52071)

   a. Press bearing from cam side into flywheel side of crankcase.
2. Discard bearing.

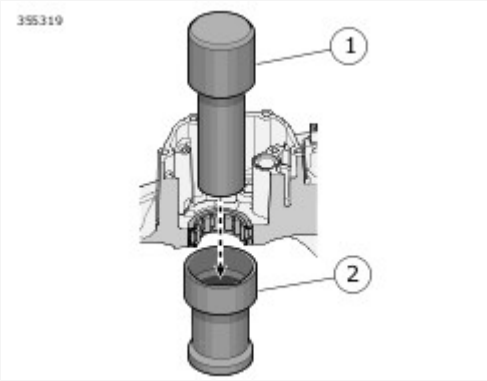

View interactive image

1	Main bearing arbor
2	Bearing support

Figure 1. Remove Right Main Bearing

Install Main Bearing

1. See Figure 2. Install bearing.

   Special Tool: MAIN BEARING REMOVER AND INSTALLER (HD-52071)

   a. Place crankcase with flywheel side facing up on main bearing support (3).
   b. Spread clean engine oil on OD of **new** bearing (5).
   c. Place bearing on bearing bore with lettering facing up.
   d. Place main bearing installer (2) with side marked RIGHT against bearing.
   e. Place main bearing arbor (1) through main bearing installer and bearing into bearing support.
   f. Press until main bearing installer contacts machined surface.
2. Check installed depth. Refer to Table 1.

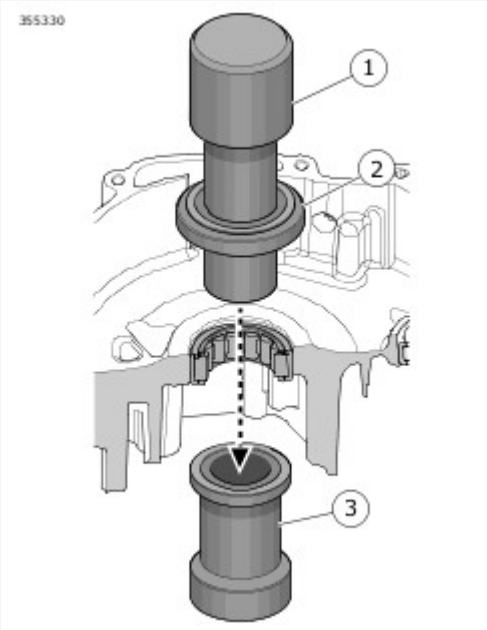

View interactive image

1	Main bearing arbor
2	Main bearing installer
3	Bearing support
4	Press ram
5	Main bearing

Figure 2. Right Main Bearing Installation

Table 1. Right Crankcase Bearing Installed Depth

BEARING LOCATION	DEPTH FROM SPLIT LINE
Right side main	54.86–55.37 mm (2.160–2.180 in)
Right side balancer	52.58–53.09 mm (2.070–2.090 in)

Remove Balancer Bearing

1. See Figure 3. Remove retaining screw (2).
2.

NOTE

Non-open flame heat may be applied to vicinity of bearing to assist in removal.

Use appropriate puller to remove bearing (1) from bore.

3. Discard bearing.

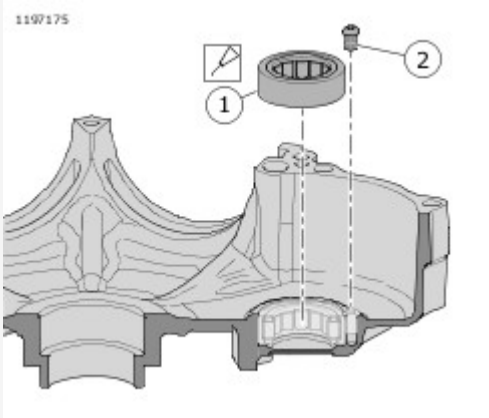

View interactive image

1	Bearing
2	Screw

Figure 3. Balancer Bearing (typical)

Install Balancer Bearing

1. Apply engine oil to OD of **new** bearing.
2.

NOTE

Install bearings with lettering facing up.

Properly support area of crankcase where bearing is being installed.

Do not use screw to draw bearing in.

Using a press, install **new** bearing until fully seated in bore.

3. Install retaining screw. Tighten.
   Torque: 9–12.4 N·m (80–110 **in-lbs**) *Balancer bearing screw*

Remove Piston Jets

1. See Figure 4. Remove screws (3) to free piston jet (2) from crankcase.
2. Discard gasket (1).

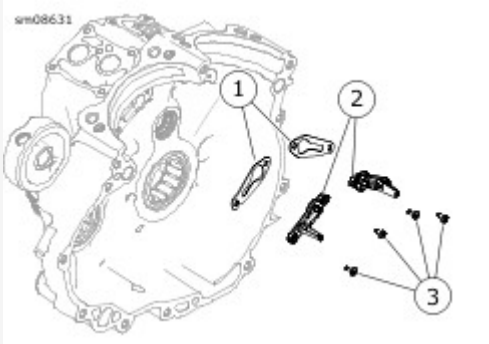

View interactive image

1	Gasket (2)
2	Piston jet (2)
3	Screw (2 each jet)

Figure 4. Piston Jets

Install Piston Jets

1. **NOTE**

   If piston jet screws are being reused, apply threadlocker to screws. LOCTITE 222 LOW STRENGTH THREADLOCKER (PURPLE) (99811-97)

   See Figure 4. Install piston jets.

   a. Install **new** gasket (1).
   b. With jet pointed up, secure piston jet (2) and gasket with screws (3).
   c. Tighten. 2.8–3.9 N·m (25–35 **in-lbs**).

Special Tools

Description	Part Number	Qty.
MAIN BEARING REMOVER AND INSTALLER	HD-52071	1

Remove Main Bearing

CAUTION

Do not rotate crankcase half in engine stand when flywheel is installed. The flywheel assembly can fall out, resulting in parts damage or moderate injury. (00552c)

1. **NOTE**

   - Never move or lift crankcase by grasping cylinder studs.
   - Always replace sprocket shaft bearing inner race whenever left main bearing is replaced. See **Engine → CRANKCASE → Sprocket Shaft Bearing Inner Race**.

   Remove thrust washer from outboard side of crankcase half by pulling it past oil seal. Set thrust washer aside for inspection or reuse.
2. Remove oil seal.
3. Remove bearing.

   Special Tool: **MAIN BEARING REMOVER AND INSTALLER** (HD-52071)

   a. See **Figure 1**. Remove bearing retaining ring.
   b. See **Figure 2**. Press bearing from stator side into flywheel side of crankcase.
4. Discard bearing.

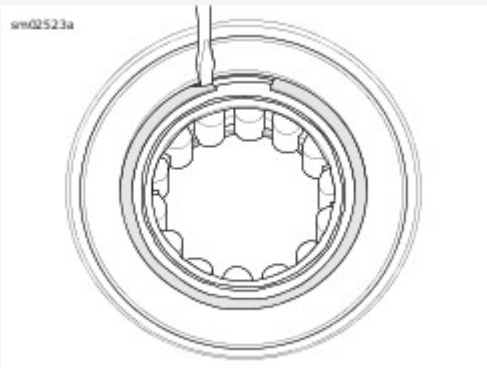

View interactive image

Figure 1. Remove Retaining Ring

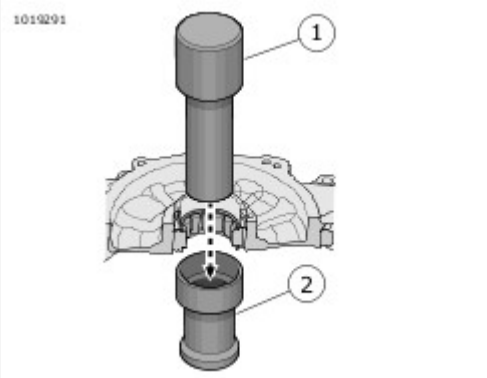

View interactive image

1	Main bearing arbor
2	Bearing support

Figure 2. Remove Left Main Bearing

Install Main Bearing

1.

NOTE

Alternator stator may be left installed when main bearing press adapter is used.

See Figure 3. Install bearing.

Special Tool: MAIN BEARING REMOVER AND INSTALLER (HD-52071)

a. Place main bearing press adapter (3) on bearing support (4).
b. Place crankcase on main bearing press adapter (3) with flywheel side facing up.
c. Spread clean engine oil on OD of **new** bearing.
d. Place bearing on bearing bore with lettering facing up.
e. Place main bearing installer (2) with side marked LEFT against bearing.
f. Place main bearing arbor (1) through main bearing installer (2) and bearing into main bearing press adapter (3) and bearing support (4).
g. Press until main bearing installer contacts machined surface.

2. Install **new** retaining ring. Make sure retaining ring is fully seated in groove.

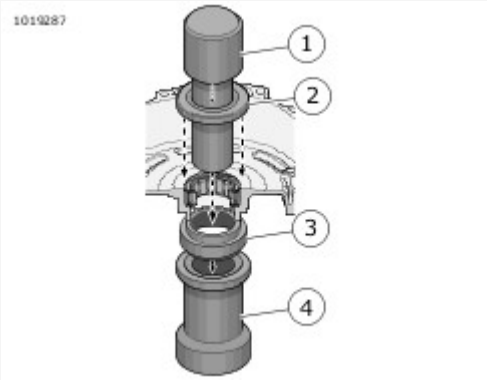

View interactive image

1	Main bearing arbor
2	Main bearing installer
3	Main bearing press adapter
4	Bearing support

Figure 3. Install Left Main Bearing

Remove Balancer Bearing

1. See Figure 4. Remove retaining screw (2).
2.

   NOTE

   Non-open flame heat may be applied to vicinity of bearing to assist in removal.

   Use appropriate puller to remove bearing (1) from bore.
3. Discard bearing.

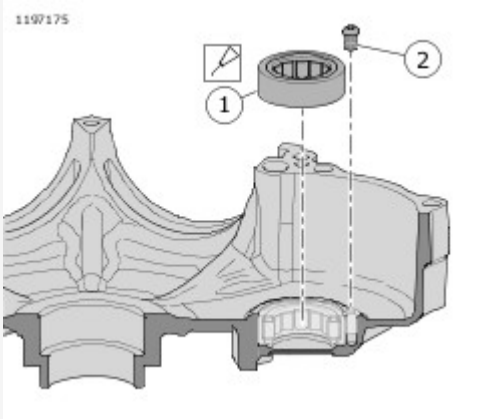

View interactive image

1	Bearing
2	Screw

Figure 4. Balancer Bearing (typical)

Install Balancer Bearing

1. Apply engine oil to OD of **new** bearing.
2.

   NOTE

   Install bearings with lettering facing up.

   Properly support area of crankcase where bearing is being installed.

   Using a press, install **new** bearing until fully seated in bore.
3. Install retaining screw. Tighten.
   Torque: 9–12.4 N·m (80–110 **in-lbs**) *Balancer bearing screw*

Special Tools

Description	Part Number	Qty.
ROBINAIR HEAT GUN	HD-25070	1
BIG-TWIN MAINSHAFT PRIMARY BEARING RACE REMOVER AND INSTALLER	HD-34902-B	1
FLYWHEEL SUPPORT FIXTURE	HD-44358	1
WEDGE ATTACHMENT	HD-95637-46B	1
SPROCKET SHAFT BEARING INSTALLER	HD-97225-55C	1

Remove

NOTE

For proper clamping force, hold-down clamp must not be tilted. Rotate hex on outboard stud until clamp is level.

1. See Figure 1. Secure flywheel assembly in FLYWHEEL SUPPORT FIXTURE (Part Number:HD-44358).
   a. Secure fixture in soft-jawed vise with the round hole topside.
   b. Insert crankshaft end through hole, resting flywheel assembly on fixture.
   c. Engage knurled locating pin in crank pin hole.
   d. Hand-tighten locating pin.
   e. Secure flywheel with hold-down clamps (2).

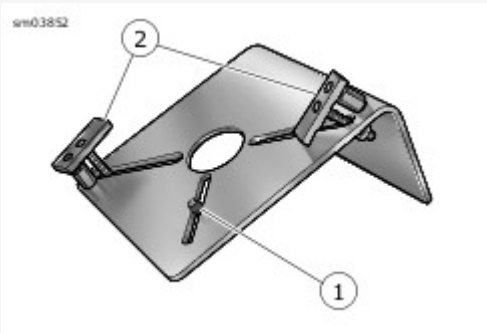

View interactive image

1	Locating pin
2	Hold-down clamp

Figure 1. Flywheel Holding Fixture

NOTICE

Install wedge attachment only so far as necessary to ensure positive contact with bearing inner race. Installing tool with more contact than necessary will result in damage to the flywheel (00500b)

1. See Figure 2. Install pulling tool.
   a. Position WEDGE ATTACHMENT (Part Number:HD-95637-46B) (5) on inboard side of thrust washer.
   b. Draw wedge halves together evenly.
   c. Secure the bridge and forcing screw from BIG-TWIN MAINSHAFT PRIMARY BEARING RACE REMOVER AND INSTALLER (Part Number:HD-34902-B) to the wedge attachment with flat washers and two 3/8-16 x 7-1/2 in bolts.
   d. Place hardened washer between end of sprocket shaft and the end of the forcing screw.
2. Uniformly heat the bearing inner race for about 30 seconds using the ROBINAIR HEAT GUN (Part Number:HD-25070).

NOTE

To assist removal without heat, apply a light penetrating oil to shaft and leading edge of bearing inner race.

WARNING

Do not use heating devices with penetrating oil. Penetrating oil is flammable which could result in death or serious injury. (00375a)

3. See Figure 2. Remove bearing race.
   a. Turn forcing screw until thrust washer and bearing inner race move approximately 3.2 mm (0.125 in).
   b. Reposition WEDGE ATTACHMENT (Part Number:HD-95637-46B) to pull on bearing inner race only.
   c. Verify that the tool assembly is square.
   d. Heat the bearing inner race for about 30 seconds.
   e. Turn forcing screw until bearing inner race is free of sprocket shaft.
   f. Remove thrust washer from sprocket shaft.

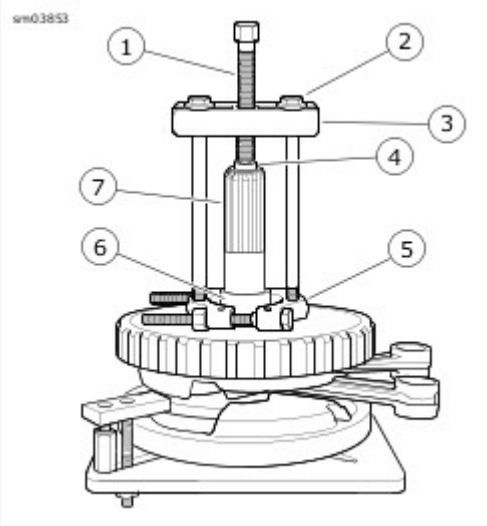

View interactive image

1	Forcing screw
2	3/8-16 bolt with flat washer
3	Bridge
4	Hardened washer
5	Wedge attachment
6	Bearing inner race
7	Sprocket shaft

Figure 2. Remove Inner Race from Sprocket Shaft

Install

1. Place **new** thrust washer over sprocket shaft.
2. Uniformly heat **new** bearing for about 60 seconds using the **ROBINAIR HEAT GUN (Part Number:HD-25070)**.
3. Drop heated bearing inner race over sprocket shaft.

NOTE

To assist installation without heat, apply a light penetrating oil to shaft and leading edge of bearing inner race.

WARNING

Do not use heating devices with penetrating oil. Penetrating oil is flammable which could result in death or serious injury. (00375a)

4. See **Figure 3**. Seat the bearing race using **SPROCKET SHAFT BEARING INSTALLER (Part Number:HD-97225-55C)**. Follow instructions supplied with tool.
5. Verify that thrust washer cannot be rotated by hand.

View interactive image

Figure 3. Press Inner Race onto Sprocket Shaft: Operation

Remove

1. Tighten two nuts together on threads of stud.
2. Place wrench on lower nut. Turn to remove stud.

Install

1. Place a steel ball inside a cylinder head screw.
2. Put the head screw on the long end of the cylinder stud.
3. Install stud using air gun until collar reaches crankcase.
4. Tighten to 13.6–27.1 N·m (120–240 **in-lbs**).

Remove

See Figure 1. Turn pipe plug or oil check valve counterclockwise to remove.

Install

1. See Figure 1. Install tapered plug (1).
   a. Apply LOCTITE 565 THREAD SEALANT to threads.
      Torque: 13.6–16.3 N·m (120–144 **in-lbs**) *Crankcase tapered plugs*
2. Install oil check valve (2) or plug with O-ring (3).
   a. Install **new** O-ring.
   b. Tighten.
      Torque: 24.4–29.8 N·m (18–22 ft-lbs) *Crankcase oil check valve or plug with O-ring*

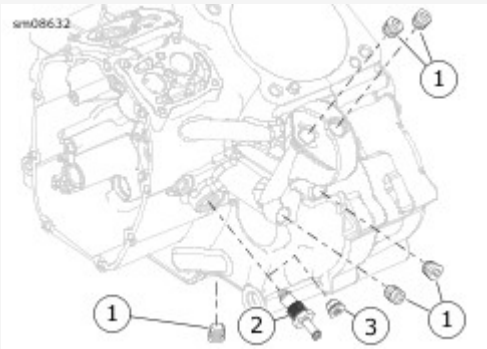

View interactive image

1	Tapered plug (5)
2	Oil check valve
3	Plug with O-ring

Figure 1. Crankcase Pipe Plugs

1. Install oil pump. See **Engine → Oil Pump**.
2. Install cam compartment components and cam cover. See **Engine → CAM COMPARTMENT AND COMPONENTS**.
3. Install pistons. See **Engine → PISTONS**.
4. Install cylinders. See **Engine → CYLINDERS**.
5. Install cylinder heads. See **Engine → CYLINDER HEADS**.
6. Install pushrods, lifters and covers. See **Engine → PUSHRODS, LIFTERS AND COVERS**.
7. Install rocker arms. See **Engine → ROCKER ARMS**.
8. Install lower rocker covers. See **Engine → LOWER ROCKER COVERS**.
9. Install breathers. See **Engine → BREATHERS**.
10. Install upper rocker covers. See **Engine → UPPER ROCKER COVERS**.
11. Install spark plugs. See **Maintenance → CLEAN AND INSPECT SPARK PLUGS**.
12. Install engine. See **Engine → REPLACE ENGINE**.

Overview

Flywheels that shift out of true at the crank pin generally exhibit one of two symptoms: no oil pressure or vibration. This condition is also known as scissored flywheels.

No Oil Pressure

When the crankshaft shifts more than 0.381 mm (0.015 in), it can break the oil pump gerotors. This causes a loss of oil pressure.

If a low or no oil pressure condition is confirmed, inspect the oil pump and cam support plate. If the oil pump gerotors are bound or damaged, the cause is likely from a contaminant running through the pump or a shifted crankshaft. If this type of damage is found, always replace the oil lines and clean all debris from the entire lubrication system. See **Maintenance → TROUBLESHOOTING** for general diagnostics of low oil pressure.

Vibration

Generally, left crankshaft runout must exceed 0.508 mm (0.020 in) to be noticeable to the rider. It is much more likely that vibration issues are resolved by following the checklist in **Maintenance → TROUBLESHOOTING**.

If correct chassis set-up has been verified and other items in **Maintenance → TROUBLESHOOTING** have been eliminated, checking left crankshaft runout is appropriate.

1. Remove engine. See **Engine → REPLACE ENGINE**.
2.

   NOTE

   Abrasive particles can damage machined surfaces or plug oil passageways. Clean parts before disassembly to prevent component damage.

   Use low-pressure compressed air to clean exterior surfaces of engine.
3. Remove spark plugs. See **Maintenance → CLEAN AND INSPECT SPARK PLUGS**.
4. Remove upper rocker covers. See **Engine → UPPER ROCKER COVERS**.
5. Remove breathers. See **Engine → BREATHERS**.
6. Remove lower rocker covers. See **Engine → LOWER ROCKER COVERS**.
7. Remove rocker arms. See **Engine → ROCKER ARMS**.
8. Remove pushrods, lifters and covers. See **Engine → PUSHRODS, LIFTERS AND COVERS**.
9. Remove cylinder heads. See **Engine → CYLINDER HEADS**.
10. Remove cylinders. See **Engine → CYLINDERS**.
11. Remove pistons. See **Engine → PISTONS**.
12. Remove cam cover and cam compartment components. See **Engine → CAM COMPARTMENT AND COMPONENTS**.
13. Remove oil pump. See **Engine → Oil Pump**.
14. Separate crankcase and remove flywheel and connecting rods. See **Engine → CRANKCASE**.

NOTE

For measure crankshaft runout procedure, see **Engine → TROUBLESHOOTING**.

NOTE

- Do not attempt to straighten connecting rods. Damage to upper bushing and lower bearing will occur.
- Zones of resistance when connecting rods are rotated through their range of motion alone is not an indication of a performance or durability concern. Connecting rod bearing failures generally exhibit noise, visible clearance, piston to valve contact, and/or secondary damage in the form of a high level of steel debris circulating throughout the engine. Verify that one or more of these symptoms is present before attempting to qualify the rod bearing condition.
- Connecting rods when placed in limit conditions, defined as positions outside the normal rod operating position (pinched together or spread to the extent of separation), may exhibit areas of resistance.
- The induction heat treat operation on Milwaukee-Eight® connecting rods will "blue" the lower end of the rod. "Blueing" on the lower rod end only is normal.

1. Inspect flywheel/connecting rod assembly if any of the following are evident.

   NOTE

   Replace assembly if any of the following conditions are noted.

   a. Rod knock noise
   b. Steel debris in oil filter
   c. Piston skirt scoring/scuffing
   d. Worn oil pump scavenge rotor and housing
   e. Piston to valve contact
   f. Damage to flywheel left or right main bearing inner races
   g. Bent or twisted connecting rods
   h. Sprocket teeth are worn in an irregular pattern or chipped
   i. Main bearing inner races are brinelled, burnt, scored, blued or damaged
   j. Flywheel, connecting rods or right side bearing inner race require replacement

2. Measure crankshaft runout if crankshaft is suspected of being out-of-true. See **Engine → TROUBLESHOOTING**.

1. Install flywheel and connecting rods and assemble crankcase. See **Engine → CRANKCASE**.
2. Install oil pump. See **Engine → Oil Pump**.
3. Install cam compartment components and cam cover. See **Engine → CAM COMPARTMENT AND COMPONENTS**.
4. Install pistons. See **Engine → PISTONS**.
5. Install cylinders. See **Engine → CYLINDERS**.
6. Install cylinder heads. See **Engine → CYLINDER HEADS**.
7. Install pushrods, lifters and covers. See **Engine → PUSHRODS, LIFTERS AND COVERS**.
8. Install rocker arms. See **Engine → ROCKER ARMS**.
9. Install lower rocker covers. See **Engine → LOWER ROCKER COVERS**.
10. Install breathers. See **Engine → BREATHERS**.
11. Install upper rocker covers. See **Engine → UPPER ROCKER COVERS**.
12. Install spark plugs. See **Maintenance → CLEAN AND INSPECT SPARK PLUGS**.
13. Install engine. See **Engine → REPLACE ENGINE**.

1. Position motorcycle on a lift.
2. Drain engine oil. See **Maintenance → REPLACE ENGINE OIL AND FILTER**.
3. Drain transmission lubricant. See **Maintenance → REPLACE TRANSMISSION LUBRICANT**.

1. Remove the engine oil fill plug/dipstick.
2. See Unresolved graphic link. Remove oil pan.
    a. Remove 10 screws (3).
    b. Remove oil pan (2).
    c. Discard oil pan gasket (1).

NOTE

Debris that remains in the pan can cause a repeat failure. Install a **new** oil pan if necessary.

3. Thoroughly inspect and clean the oil pan.

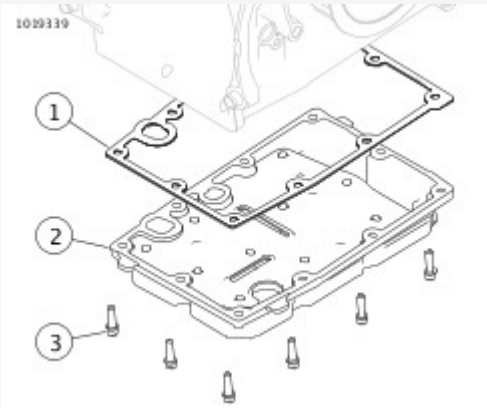

View interactive image

1	Gasket
2	Oil pan
3	Screws (14)

Figure 1. Oil Pan Assembly

Consumables

Description	Part Number	Size
LOCTITE 243 MEDIUM STRENGTH THREADLOCKER AND SEALANT (BLUE)	99642-97	6 ml (¼ fl oz)

1. Clean and examine all flange surfaces.
2. Clean engine oil and transmission lubricant drain plugs.
   a. Replace O-rings as required.
3. Install transmission drain plug and O-ring. Tighten.
   Torque: 19–28.5 N·m (14–21 ft-lbs) *Transmission drain plug*
4. Install engine oil drain plug and O-ring. Tighten.
   Torque: 19–28.5 N·m (14–21 ft-lbs) *Engine oil drain plug*
5. Install oil pan.
   a. Apply a thin coat of HYLOMAR GASKET AND THREAD SEALANT to oil pan flange.
   b. Apply threadlocker to used oil pan screws.
      LOCTITE 243 MEDIUM STRENGTH THREADLOCKER AND SEALANT (BLUE) (99642-97)
   c. Place **new** gasket (1) on oil pan flange. Allow sealer to dry until tacky.
   d. Position oil pan with gasket on bottom of transmission.
   e. Loosely install fasteners (3).
   f. Verify that the gasket is properly positioned. Tighten following sequence shown.
      Torque: 14.9–17.6 N·m (132–156 **in-lbs**) *Oil pan fasteners*

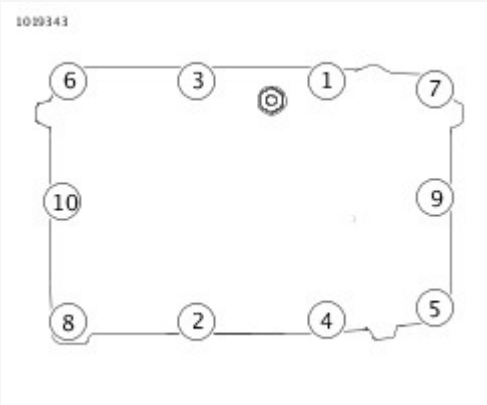

View interactive image

Figure 1. Oil Pan Tightening Sequence

1. Add fluids.
   a. Add transmission lubricant. See **Maintenance → REPLACE TRANSMISSION LUBRICANT**.
   b. Install **new** engine oil filter.
   c. Fill engine oil. See **Maintenance → REPLACE ENGINE OIL AND FILTER**.

FASTENER	TORQUE VALUE	NOTES
Battery ground cable to transmission	7.5–12.9 N·m (66–114 **in-lbs**)	5.15 TRANSMISSION CASE, Install
Clutch cable fitting	10.2–13.6 N·m (90–120 **in-lbs**)	5.6 CLUTCH RELEASE COVER, Install
Clutch hub mainshaft nut	94.9–108.5 N·m (70–80 ft-lbs)	5.8 DRIVE COMPONENTS, Install
Clutch release cover screws	14.9–17.6 N·m (132–156 **in-lbs**)	5.6 CLUTCH RELEASE COVER, Install
Compensating sprocket bolt, 1st torque	135.6 N·m (100 ft-lbs)	5.8 DRIVE COMPONENTS, Install *Loosen then final tighten*
Compensating sprocket bolt, final torque	237.3 N·m (175 ft-lbs)	5.8 DRIVE COMPONENTS, Install
Drive belt slot spacer screw, 1st torque	68–75 N·m (50–55 ft-lbs)	5.4 DRIVE BELT, Install
Drive belt slot spacer screw, final torque	88–95 N·m (65–70 ft-lbs)	5.4 DRIVE BELT, Install
Engine oil fill spout screw.	11.3–13.6 N·m (100–120 **in-lbs**)	5.11 ENGINE OIL FILL SPOUT, Install
Foot shift lever pinch screw, front-mount	12.2–16.3 N·m (9–12 ft-lbs)	5.5 SHIFTER LINKAGE, Shifter Rod Lever, Front
Front-Mount Foot shift lever pinch screw	12.2–16.3 N·m (108–144 **in-lbs**)	5.5 SHIFTER LINKAGE, Foot Shift Lever
Mid-Mount Foot shift lever pinch screw	32.5–38 N·m (24–28 ft-lbs)	5.5 SHIFTER LINKAGE, Foot Shift Lever
Oil return tube screw	11.3–13.6 N·m (100–120 **in-lbs**)	5.15 TRANSMISSION CASE, Assemble
Primary chain tensioner fasteners	28.5–32.6 N·m (21–24 ft-lbs)	5.8 DRIVE COMPONENTS, Install
Primary chaincase sealing screws	35.3–38 N·m (26–28 ft-lbs)	5.10 PRIMARY CHAINCASE HOUSING, Install
Primary cover screws	16.3–17.6 N·m (144–156 **in-lbs**)	5.7 PRIMARY CHAINCASE COVER, Install *See sequence in the procedure*
Rear fork pivot shaft nut, 1st torque	34–41 N·m (25–30 ft-lbs)	5.4 DRIVE BELT, Install
Rear fork pivot shaft nut, 2nd torque	0.1–5.4 N·m (1–48 **in-lbs**)	5.4 DRIVE BELT, Install
Rear fork pivot shaft nut, 3rd torque	209–230 N·m	5.4 DRIVE BELT, Install

	(154–170 ft-lbs)	
Rear fork pivot shaft nut, final torque	209–230 N·m (154–170 ft-lbs)	5.4 DRIVE BELT, Install
Rear fork pivot shaft pinch bolt	24–27 N·m (18–20 ft-lbs)	5.4 DRIVE BELT, Install
Shift drum detent screw	13.6–17 N·m (120–150 **in-lbs**)	5.13 TRANSMISSION, Assemble
Shift drum detent screw	13.6–17 N·m (120–150 **in-lbs**)	5.13 TRANSMISSION, Assemble
Shift drum lock plate screws	6.4–7.1 N·m (57–63 **in-lbs**)	5.13 TRANSMISSION, Assemble
Shift drum lock plate screws	6.4–7.1 N·m (57–63 **in-lbs**)	5.13 TRANSMISSION, Assemble
Shifter pawl centering screw	24.4–31.2 N·m (18–23 ft-lbs)	5.15 TRANSMISSION CASE, Assemble
Shifter peg screw	10.9–16.3 N·m (96–144 **in-lbs**)	5.5 SHIFTER LINKAGE, Foot Shift Lever
Shifter rod jamnut	9.5–14.9 N·m (84–132 **in-lbs**)	5.5 SHIFTER LINKAGE, Shifter Rod
Shifter rod lever pinch screw, mid-mount	24.4–29.8 N·m (18–22 ft-lbs)	5.5 SHIFTER LINKAGE, Shifter Rod Lever, Front
Shifter rod lever pinch screw, transmission lever	24.4–29.8 N·m (18–22 ft-lbs)	5.15 TRANSMISSION CASE, Assemble
Shifter rod to front shifter rod lever, front foot control	13.6–19 N·m (120–168 **in-lbs**)	5.5 SHIFTER LINKAGE, Shifter Rod
Shifter rod to rear shifter rod lever, front foot control	13.6–19 N·m (120–168 **in-lbs**)	5.5 SHIFTER LINKAGE, Shifter Rod
Shifter rod to shifter rod lever	13.6–19 N·m (120–168 **in-lbs**)	5.5 SHIFTER LINKAGE, Shifter Rod
Shifter rod to shifter rod lever, front-mount	13.6–19 N·m (120–168 **in-lbs**)	5.5 SHIFTER LINKAGE, Shifter Rod Lever, Front
Shifter rod to shifter rod lever, mid-mount	13.6–19 N·m (120–168 **in-lbs**)	5.5 SHIFTER LINKAGE, Shifter Rod Lever, Front
Shifter rod to shifter rod lever, mid-mount control	13.6–19 N·m (120–168 **in-lbs**)	5.5 SHIFTER LINKAGE, Shifter Rod
Transmission bearing housing screws	29.8–33.9 N·m (22–25 ft-lbs)	5.13 TRANSMISSION, Install
Transmission mainshaft/countershaft locknuts	115.3–128.8 N·m (85–95 ft-lbs)	5.13 TRANSMISSION, Assemble

Transmission mounting bolts, 1st torque	20.3 N·m (15 ft-lbs)	**5.15 TRANSMISSION CASE, Install**
Transmission mounting bolts, final torque	46.1–52.9 N·m (34–39 ft-lbs)	**5.15 TRANSMISSION CASE, Install**
Transmission sprocket lockplate screws	10.2–13.6 N·m (90–120 **in-lbs**)	**5.12 TRANSMISSION SPROCKET, Install** *Lock patch, use 3-5 times*
Transmission sprocket nut, 1st torque	135.6 N·m (100 ft-lbs)	**5.12 TRANSMISSION SPROCKET, Install** *Apply LOCTITE 271 HIGH STRENGTH THREADLOCKER (red) to last few threads. Loosen one full turn after first torque.*
Transmission sprocket nut, 2nd torque	47.5 N·m (35 ft-lbs)	**5.12 TRANSMISSION SPROCKET, Install**
Transmission sprocket nut, final torque	35–40° (35–40°)	**5.12 TRANSMISSION SPROCKET, Install** *Do not loosen to align lockplate screws.*
Transmission top cover	14.9–17.6 N·m (132–156 **in-lbs**)	**5.13 TRANSMISSION, Install**

FORMULA+ TRANSMISSION AND PRIMARY CHAINCASE LUBRICANT and SCREAMIN' EAGLE SYN3 FULL SYNTHETIC MOTORCYCLE LUBRICANT 20W50 are both acceptable lubricants.

Table 1. Primary Chaincase Lubricant

AMOUNT*	DRY FILL**		WET FILL***	
	OZ	L	OZ	L
Primary	40	1.27	36	1.06

* Amount is approximate. Fill to bottom of pressure plate OD with vehicle upright.
** Cover was removed and installed.
*** Lubricant was drained through the drain plug only.

Table 2. Sprocket Teeth

DRIVE	ITEM	NUMBER OF TEETH
Primary	Engine	34
	Clutch	46
Final	Transmission	32
	Rear wheel	66

Table 3. Overall Drive Ratios

GEAR	RATIO
First	9.311
Second	6.454
Third	4.793
Fourth	3.882
Fifth	3.307
Sixth	2.790

NOTE

Overall gear ratios indicate number of engine revolutions required to drive rear wheel one revolution.

Table 1. Transmission Specifications

TRANSMISSION	DATA
Type	6-speed forward constant mesh
FORMULA+ TRANSMISSION AND PRIMARY CHAINCASE LUBRICANT	Part No. 99851-05 (qt)
SYN3 20W50 Oil	Part No. 99824-03/00QT (qt)
Capacity * (approximate)	0.83 L (28 fl oz)
* Add additional fluid as necessary to bring level within specification.	

Table 2. Transmission Gear Ratios

GEAR	GEAR RATIO
First (low)	3.34
Second	2.31
Third	1.72
Fourth	1.39
Fifth	1.19
Sixth (high)	1.00

NOTE

Final gear ratios indicate the number of mainshaft revolutions required to drive the output sprocket one revolution.

Table 1. Main Drive Gear Specifications

MAIN DRIVE GEAR (SIXTH)	IN	MM
Bearing fit in transmission case (loose)	0.0003-0.0017	0.0076-0.043
Fit in bearing (press-fit)	0.001-0.003	0.025-0.076
End play: Two row bearing	none	none
End play: Single row bearing	0.000-0.012	0.000-0.305

Table 2. Mainshaft Tolerance Specifications

MAINSHAFT TOLERANCE	IN	MM
Mainshaft runout	0.000-0.003	0.00-0.08
Mainshaft end play	none	none
Fifth gear end play (axial)	0.002-0.026	0.05-0.66
Fifth gear clearance (radial)	0.0004-0.0020	0.009-0.052
Main drive gear (sixth) fit	0.0009-0.0022	0.023-0.056

Table 3. Countershaft Tolerance Specifications

COUNTERSHAFT TOLERANCE	IN	MM
Countershaft runout	0.000-0.003	0.00-0.08
Countershaft end play	0.001-0.003	0.025-0.08
First gear end play (axial)	0.001-0.023	0.03-0.58
First gear clearance (radial)	0.0004-0.0020	0.010-0.052
Second gear end play (axial)	0.001-0.40	0.03-1.02
Second gear clearance (radial)	0.0004-0.0020	0.010-0.052
Third gear end play (axial)	0.001-0.042	0.03-1.07
Third gear clearance (radial)	0.0004-0.0020	0.010-0.052
Fourth gear end play (axial)	0.001-0.028	0.03-0.71
Fourth gear clearance (radial)	0.0004-0.0020	0.010-0.052

Table 4. Shifter Dog Clearance Specifications

SHIFTER DOG	IN	MM
First	0.013-0.121	0.33-3.07
Second	0.016-0.138	0.41-3.51
Third	0.010-0.125	0.25-3.17
Fourth	0.018-0.129	0.46-3.28
Fifth	0.007-0.117	0.18-2.97
Sixth	0.022-0.131	0.56-3.33

Table 5. Bearing Housing Bearing Specifications

BEARING HOUSING BEARING	IN	MM
Fit in bearing housing (tight)	0.0001-0.0014	0.0025-0.0356
Fit on countershaft (tight)	-0.0004	-0.010
Fit on countershaft (loose)	+0.0012	+0.030
Fit on mainshaft (tight)	-0.0004	-0.010
Fit on mainshaft (loose)	+0.0012	+0.030

Table 6. Shifter Fork Specifications

SHIFTER FORKS	IN	MM
Shifter fork to cam groove end play	0.004-0.012	0.102-0.305
Shifter fork to dog ring end play	0.004-0.016	0.102-0.4060
First and second gear shift fork pad thickness wear limit	0.258	6.55
Third and fourth gear shift fork pad thickness wear limit	0.198	5.03
Fifth and sixth gear shift fork pad thickness wear limit	0.258	6.55

See Figure 1. The 6-speed transmission consists of two parallel shafts supporting six gears each. The longer, or mainshaft (7), also supports the clutch and serves as the input shaft. The shorter shaft is called the countershaft (8).

Each gear on the mainshaft is in constant mesh with a corresponding gear on the countershaft. Each of these six pairs of gears makes up a different speed in the transmission.

The transmission gears are divided into two types, gears that rotate with the shaft, and gears that spin freely on the shaft. A gear that rotates with the shaft always meshes with a freewheeling gear. Also, three dog rings are able to slide sideways on the shaft. These dog rings are used to change transmission speeds. The dogs on the sides of dog rings engage dogs on adjacent freewheeling gears, transmitting power through the transmission.

Gear shifting is accomplished by three forks which fit into grooves machined into the dog rings that slide on the guide hubs. The position of the shifter forks is controlled by a drum-shaped shifter cam located in the transmission bearing housing.

Neutral

Power is introduced to the transmission through the clutch. In neutral, with the clutch engaged, the mainshaft first, second, third and fourth gears are rotating. No power is transferred to the countershaft since countershaft first, second, third and fourth gears are freewheeling gears.

First Gear

When the transmission is shifted into first gear, the dog ring between countershaft first and second, which rotates with the countershaft, engages countershaft first, which has been spinning freely on the countershaft driven by mainshaft first.

Now countershaft first is no longer freewheeling, but locked to the countershaft causing the countershaft and countershaft sixth to turn. Countershaft sixth transmits the power to the main drive gear and the sprocket as shown (1).

Second Gear

Second gear is engaged when the dog ring between countershaft first and second is shifted out of countershaft first and engages countershaft second. This locks countershaft second to the countershaft to complete the power flow as shown (2).

Third Gear

Two shifter forks are used to make the shift from second to third. One fork moves the dog ring between countershaft first and second to its neutral position. At the same time another fork engages the dog ring between countershaft third and fourth with countershaft third. This locks countershaft third to the countershaft to complete the power flow as shown (3).

Fourth Gear

Fourth gear is engaged when the dog ring between countershaft third and fourth is shifted out of countershaft third and engages countershaft fourth. This locks countershaft fourth to the countershaft to complete the power flow as shown (4).

Fifth Gear

Two shifter forks are used to make the shift from fourth to fifth. One fork moves the dog ring between countershaft third and fourth to its neutral position. At the same time another fork engages the dog ring between mainshaft fifth and sixth with mainshaft fifth. This locks mainshaft fifth to the mainshaft to complete the power flow as shown (5).

Sixth Gear

The shift from fifth to sixth gear occurs when the dog ring between mainshaft fifth and sixth is shifted out of mainshaft fifth. It is shifted directly into the main drive gear (sixth gear). The main drive gear is locked to the mainshaft. this results in a direct one-to-

one drive ratio from the clutch to the sprocket as shown (6).

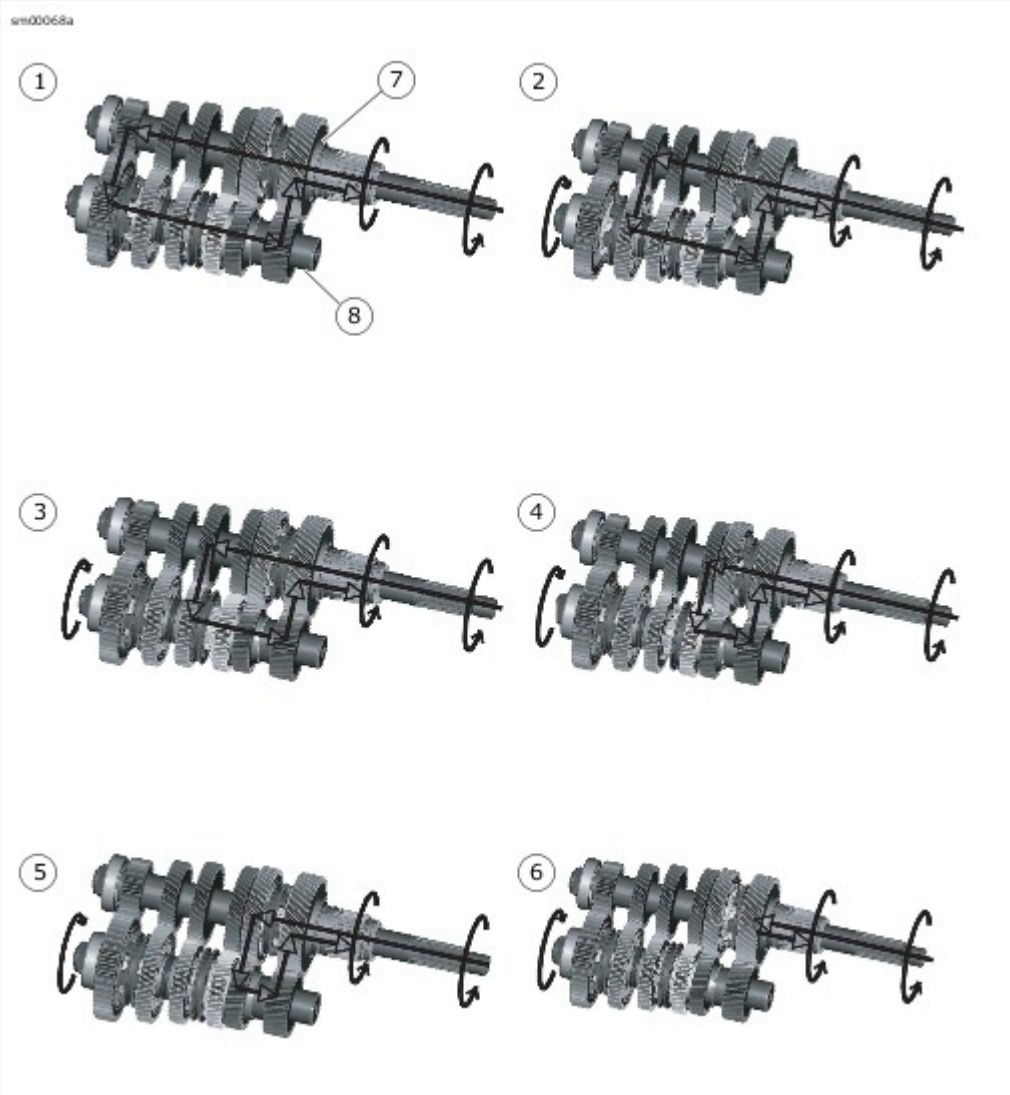

View interactive image

1	First gear
2	Second gear
3	Third gear
4	Fourth gear
5	Fifth gear
6	Sixth gear
7	Mainshaft
8	Countershaft

Figure 1. Transmission Power Flow

WARNING

To prevent accidental vehicle start-up, which could cause death or serious injury, disconnect negative (-) battery cable before proceeding. (00048a)

1. Disconnect negative battery cable. See **Electrical → POWER DISCONNECT**.
2. Remove saddlebags if equipped. See **Chassis → SADDLEBAGS**
3. Remove mufflers and exhaust bracket. See **Fuel and Exhaust → EXHAUST SYSTEM**
4. Remove rear wheel. See **Chassis → REAR WHEEL**.
5. Remove rider footboard and bracket, if needed. See **Chassis → LEFT FOOT CONTROLS**.
6. **Mid-mount controls:** Remove foot shift lever. See **Drive and Transmission → SHIFTER LINKAGE**.
7. Drain primary chaincase oil. See **Maintenance → REPLACE PRIMARY CHAINCASE LUBRICANT**.
8. Remove primary chaincase cover. See **Drive and Transmission → PRIMARY CHAINCASE COVER**.
9. Remove starter. See **Electrical → STARTER**.
10. Remove primary chain, clutch and compensating sprocket. See **Drive and Transmission → DRIVE COMPONENTS**.
11. Remove primary chaincase housing. See **Drive and Transmission → PRIMARY CHAINCASE HOUSING**.

1. See Drive and Transmission → DRIVE BELT → Install → Drive Belt. Loosen pivot shaft.
   a. Remove nut (1).

NOTE
Hold pivot shaft while loosening nut.

   b. See Chassis → REAR FORK → Remove and Install → Rear Fork Assembly: All except FXDRS or Chassis → REAR FORK → Remove and Install → Rear Fork Assembly: FXDRS. Loosen pivot shaft pinch bolt.
   c. See Drive and Transmission → DRIVE BELT → Install → Drive Belt. Slide pivot shaft out enough to remove round spacer (2).
2. **All But FXDRS:** Remove slot spacer.
   a. Remove screws (5).
   b. Remove slot spacer (4).
3. Remove belt (3).

WARNING

Never bend belt forward into a loop smaller than the drive sprocket diameter. Never bend belt into a reverse loop. Over bending can damage belt resulting in premature failure, which could cause loss of control and death or serious injury. (00339a)

1. See **Figure 1**. Install drive belt (3) on final drive sprocket.
2. Install pivot shaft.
   a. Position round spacer (2) between drive belt (3), frame and rear fork.
   b. Slide pivot shaft through round spacer and left side of frame.
   c. Install pivot shaft nut (1). Tighten.
      Torque: 34–41 N·m (25–30 ft-lbs) *Rear fork pivot shaft nut, 1st torque*
   d. Back off pivot shaft nut.
      Angle: 90°
   e. Tighten pivot shaft nut.
      Torque: 0.1–5.4 N·m (1–48 **in-lbs**) *Rear fork pivot shaft nut, 2nd torque*
3.

   NOTE

   All But FXDRS: Verify round spacer (2) does not have lateral play.

   All But FXDRS: Install slot spacer.
   a. Place slot spacer (4) in the center of the drive belt and between frame and rear fork.
   b. Install slot spacer screws (5). Tighten.
      Torque: 68–75 N·m (50–55 ft-lbs) *Drive belt slot spacer screw, 1st torque*
   c. Loosen slot spacer screws.
      Angle: 90°
   d. Tighten slot spacer screws.
      Torque: 88–95 N·m (65–70 ft-lbs) *Drive belt slot spacer screw, final torque*
4. Place drive belt on sprocket and install rear wheel. See **Chassis → REAR WHEEL**.

   NOTE

   Adjust the belt tension after the drive belt slot spacer screws (All But FXDRS) have been torqued to final specifications and before the pivot shaft nut has been torqued to final specifications.

5. Tighten pivot shaft nut (1).
   a. Tighten pivot shaft nut.
      Torque: 209–230 N·m (154–170 ft-lbs) *Rear fork pivot shaft nut, 3rd torque*
   b. Loosen pivot shaft nut.
      Angle: 90°

c. Tighten pivot shaft nut.
Torque: 209–230 N·m (154–170 ft-lbs) *Rear fork pivot shaft nut, final torque*

NOTE

After final torque of pivot shaft nut there will be a slight gap between the right side bearing and rear fork.

6.

NOTE

Verify round spacer (2) does not have lateral play.

See **Chassis → REAR FORK → Remove and Install → Rear Fork Assembly: All except FXDRS** or **Chassis → REAR FORK → Remove and Install → Rear Fork Assembly: FXDRS**. Tighten pivot shaft pinch bolt.
Torque: 24–27 N·m (18–20 ft-lbs) *Rear fork pivot shaft pinch bolt*

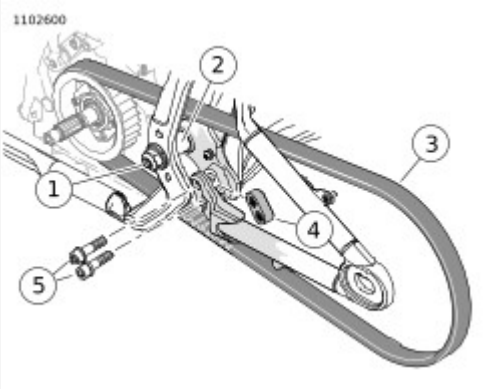

View interactive image

1	Pivot shaft nut
2	Round spacer
3	Drive belt
4	Slot spacer
5	Slot spacer screw (2)

Figure 1. Drive Belt

1. Install primary chaincase housing. See **Drive and Transmission → PRIMARY CHAINCASE HOUSING**.
2. Install the primary chain, clutch, compensating sprocket and chain tensioner. See **Drive and Transmission → DRIVE COMPONENTS**.
3. Install starter. See **Electrical → STARTER**.
4. Install primary chaincase cover and **new** gasket. See **Drive and Transmission → PRIMARY CHAINCASE COVER**.
5. Fill primary chaincase oil. See **Maintenance → REPLACE PRIMARY CHAINCASE LUBRICANT**.
6. **Mid-mount controls:** Install foot shift lever. See **Drive and Transmission → SHIFTER LINKAGE**.
7. Install rider left footboard and bracket, if removed. See **Chassis → LEFT FOOT CONTROLS**.
8. Install mufflers and exhaust bracket. See **Fuel and Exhaust → EXHAUST SYSTEM**.
9. Install saddlebags if equipped. See **Chassis → SADDLEBAGS**.
10. Connect negative battery cable. See **Electrical → POWER DISCONNECT**.

Replace

Front Foot Control Models

1. See Figure 1. Discard nut (2) and remove screw (6) from front shifter rod lever (1).
2. Remove screw (5) from rear shifter rod lever (4).
3. Remove shifter rod (3)
4. Install shifter rod.
   a. Install shifter rod to each shifter rod lever.
   b. Install screw (5). Tighten.
      Torque: 13.6–19 N·m (120–168 **in-lbs**) *Shifter rod to rear shifter rod lever, front foot control*
   c. Install screw (6) and **new** nut. Tighten.
      Torque: 13.6–19 N·m (120–168 **in-lbs**) *Shifter rod to front shifter rod lever, front foot control*

Mid-Mount Foot Control Models

1. See Figure 2. Remove screws (4).
2. Remove shifter rod (3).
3. Install shifter rod.
   a. Install shifter rod to each shifter rod lever.
   b. Install screws. Tighten.
      Torque: 13.6–19 N·m (120–168 **in-lbs**) *Shifter rod to shifter rod lever, mid-mount control*

Adjust

NOTE

- The shifter rod should not require adjustment under normal circumstances. However, if full gear engagement or full lever travel is not achieved, adjust the shifter rod.
- Do not allow shift lever to contact footboard or support bracket when shifting. This prevents proper gear engagement. Contact may also damage the transmission.

1. See Figure 1 or Figure 2. Disconnect forward end of shifter rod from forward shifter rod lever.
2. Loosen jamnuts. Adjust rod (3) as necessary.
3. Secure shifter rod to front shifter rod lever. Tighten..
   Torque: 13.6–19 N·m (120–168 **in-lbs**) *Shifter rod to shifter rod lever*
4. Tighten jamnuts.
   Torque: 9.5–14.9 N·m (84–132 **in-lbs**) *Shifter rod jamnut*

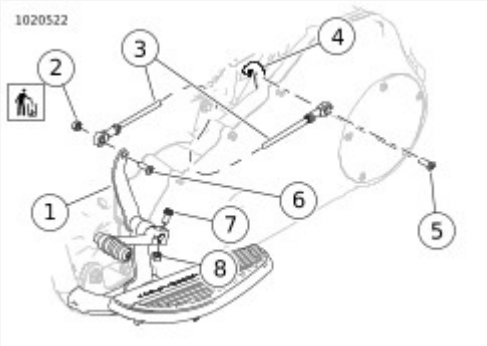

View interactive image

1	Shifter rod lever, front
2	Nut
3	Shifter rod
4	Shifter rod lever, rear
5	Screw
6	Screw
7	Pinch screw
8	Nut

Figure 1. Shift Linkage: Forward Foot Control Models

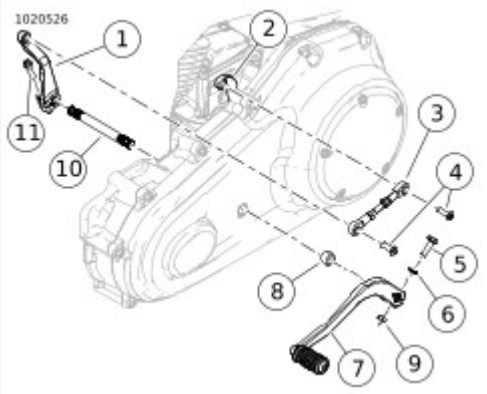

View interactive image

1	Shifter rod lever, front
2	Shifter rod lever, rear
3	Shifter rod
4	Screw (2)
5	Pinch screw

6	Washer
7	Foot shift lever
8	Spacer
9	Nut
10	Shaft
11	Pinch screw

Figure 2. Shift Linkage: Mid-Mount Foot Control Models

Removal

1. See Drive and Transmission → SHIFTER LINKAGE → Shifter Rod → Shift Linkage: Forward Foot Control Models or Drive and Transmission → SHIFTER LINKAGE → Shifter Rod → Shift Linkage: Mid-Mount Foot Control Models. Mark position of lever in relation to shaft.
2. **Mid-Mount Foot Control Models:** Remove nut (9). **Front-Mount Foot Control Models:** Remove nut (8).
3. Remove pinch screw securing foot shift lever.
4. Remove lever from shaft.
5. **Mid-Mount Foot Control Models:** Remove spacer (8).

Repair

1. Remove screw securing rubber peg to lever. Separate screw from peg.
2. Assemble peg to lever with screw. Tighten.
   Torque: 10.9–16.3 N·m (96–144 **in-lbs**) *Shifter peg screw*

Installation

1. **Mid-Mount Foot Control Models:** Install spacer (8).

   NOTE

   Foot shift lever peg height is a customer preference. During installation, check operation of shift lever. To achieve proper gear engagement and to avoid damage to transmission, the peg must not contact the footboard or supports when shifting.

2. Install foot shift lever.
   a. Align to marks made during removal.
   b. Press foot shift lever onto shaft.
   c. Install pinch screw and nut.
   d. Tighten.
      Torque: 32.5–38 N·m (24–28 ft-lbs) *Mid-Mount Foot shift lever pinch screw*
      Torque: 12.2–16.3 N·m (108–144 **in-lbs**) *Front-Mount Foot shift lever pinch screw*
3. Verify shift lever operation.

Removal

1. See Drive and Transmission → SHIFTER LINKAGE → Shifter Rod → Shift Linkage: Forward Foot Control Models or Drive and Transmission → SHIFTER LINKAGE → Shifter Rod → Shift Linkage: Mid-Mount Foot Control Models. Remove screw to free linkage from front shifter rod lever (1).
2. Mark position of foot shift lever in relation to shaft.
3. **Front-Mount Foot Control Models:**
   a. See Drive and Transmission → SHIFTER LINKAGE → Shifter Rod → Shift Linkage: Forward Foot Control Models. Remove pinch screw (7) and nut (8).
   b. Remove foot shift lever assembly.
   c. Remove shifter rod lever and shaft.
4. **Mid-Mount Foot Control Models:**
   a. See Drive and Transmission → SHIFTER LINKAGE → Shifter Rod → Shift Linkage: Mid-Mount Foot Control Models. Remove pinch screw from front shifter rod lever (1).
   b. Pull foot shifter rod lever (1) and shaft outward until shifter rod lever is free.
   c. Remove shifter rod lever (7).

Installation

1. **Front-Mount Foot Control Models:**
   a. See Drive and Transmission → SHIFTER LINKAGE → Shifter Rod → Shift Linkage: Forward Foot Control Models. Install shifter rod lever (1) and shaft.
   b. Install foot shift lever, aligning to marks made during removal.
   c. Install pinch screw (7). Tighten.
   Torque: 12.2–16.3 N·m (9–12 ft-lbs) *Foot shift lever pinch screw, front-mount*
   d. Connect shifter rod. Tighten.
   Torque: 13.6–19 N·m (120–168 **in-lbs**) *Shifter rod to shifter rod lever, front-mount*
2. **Mid-Mount Foot Control Models:**
   a. See Drive and Transmission → SHIFTER LINKAGE → Shifter Rod → Shift Linkage: Mid-Mount Foot Control Models. Hold shifter rod lever (1) in place.
   b. Push foot shift lever and rod into shifter rod lever aligning splines as they mate.
   c. Install pinch screw. Tighten.
   Torque: 24.4–29.8 N·m (18–22 ft-lbs) *Shifter rod lever pinch screw, mid-mount*
3. Secure linkage to shifter rod lever (1). Tighten.
   Torque: 13.6–19 N·m (120–168 **in-lbs**) *Shifter rod to shifter rod lever, mid-mount*
4. Verify shifter rod operation.

1. Remove main fuse. See **Electrical → POWER DISCONNECT**
2. Remove exhaust system if needed. See **Fuel and Exhaust → EXHAUST SYSTEM**.
3. Drain transmission. See **Maintenance → REPLACE TRANSMISSION LUBRICANT**.

1.

NOTE

Actuating the clutch hand lever after removing the six screws will help break the cover free.

See **Figure 1**. Remove screws.

2. Remove clutch release cover.
3. Discard gasket.

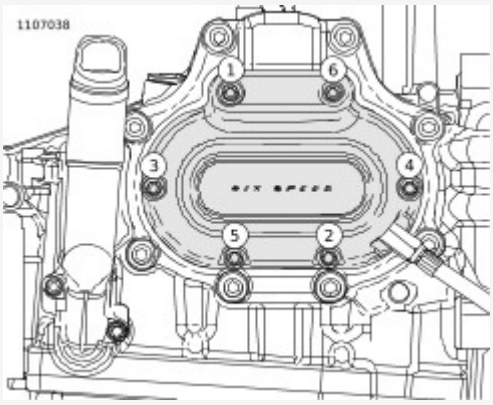

View interactive image

Figure 1. Clutch Release Cover Torque Sequence (Short Screws at Locations 1 and 6)

1. Verify that two dowel pins are in place on transmission bearing housing flange.
2. Install **new** gasket.
3. Install clutch release cover.
4.

NOTE

See **Drive and Transmission → CLUTCH RELEASE COVER → Remove → Clutch Release Cover Torque Sequence (Short Screws at Locations 1 and 6)**. Clutch release cover screws in positions (1) and (6) are shorter than the others.

Install screws. Tighten in sequence shown.
Torque: 14.9–17.6 N·m (132–156 **in-lbs**) *Clutch release cover screws*

5. Tighten clutch cable fitting, if removed.
Torque: 10.2–13.6 N·m (90–120 **in-lbs**) *Clutch cable fitting*

1.

NOTE

Do not separate clutch cable halves.

Add free play to clutch cable. See **Maintenance → CHECK AND ADJUST CLUTCH**.

WARNING

Wear safety glasses or goggles when removing or installing retaining rings. Retaining rings can slip from the pliers and could be propelled with enough force to cause serious eye injury. (00312a)

2. See **Figure 1**. Disconnect clutch cable.
   a. Remove retaining ring (4).
   b. Lift inner ramp (5) and ramp coupling (3) out of clutch release cover.
   c. Disconnect clutch cable end (2) from the ramp coupling (3).
3. Remove coupling (3) from inner ramp.
4. See **Figure 2**. Remove balls (4) and outer ramp (2).
5. Remove clutch cable fitting from clutch release cover.

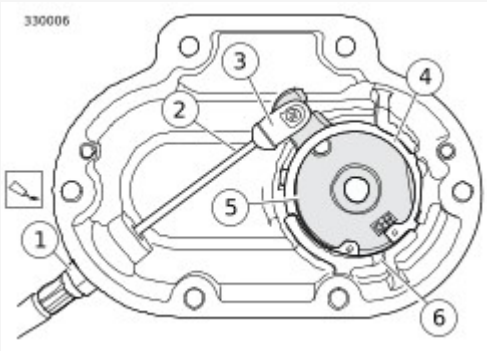

View interactive image

1	Cable fitting
2	Clutch cable end
3	Ramp coupling
4	Retaining ring
5	Inner ramp
6	Retaining ring opening

Figure 1. Clutch Cable Connection

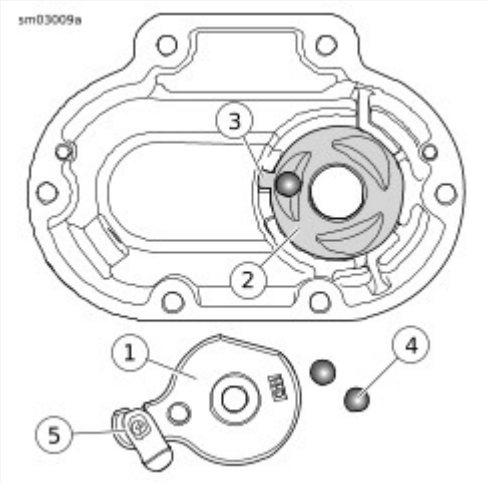

View interactive image

1	Inner ramp
2	Outer ramp
3	Outer ramp tab
4	Balls (3)
5	Ramp coupling

Figure 2. Coupling and Ramp Assembly

1. See Figure 1. Wash the ball and ramp mechanism components in cleaning solvent.
2. Inspect the three balls (2) and ball socket surfaces on ramps (1, 3) for wear, pitting, surface breakdown and other damage. Replace as necessary.
3. Check fit of the ramp coupling (4) on inner ramp (1). Replace both parts if there is excessive wear.
4. Inspect the retaining ring (6) for damage or distortion.
5. Check clutch cable end for frayed or worn ends. Replace cable if damaged or worn. Check cable fitting O-ring for damage.
6. Check the bore in the clutch release cover (5) where the ramps (1, 3) are retained. There should be no wear that would cause the ramps to tilt, causing improper clutch adjustment.

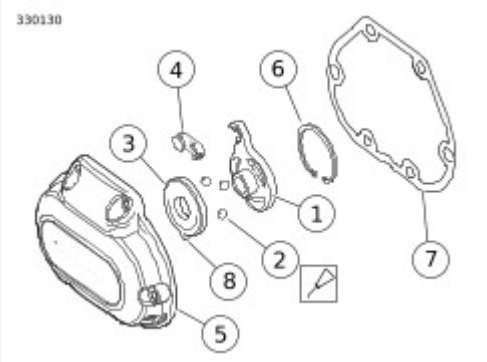

View interactive image

1	Inner ramp
2	Ball (3)
3	Outer ramp
4	Ramp coupling
5	Clutch release cover
6	Retaining ring
7	Gasket
8	Tab

Figure 1. Release Mechanism Assembly

NOTE

Replace cable fitting O-ring if damaged.

1. See Drive and Transmission → CLUTCH RELEASE COVER → Disassemble → Clutch Cable Connection. Apply a drop of LOCTITE 243 MEDIUM STRENGTH THREADLOCKER AND SEALANT (blue) to the clutch cable fitting (1).
2. Install clutch cable fitting in clutch release cover. Leave fasteners loose.
3. See Drive and Transmission → CLUTCH RELEASE COVER → Clean and Inspect → Release Mechanism Assembly. Place outer ramp (3) with ball socket side up in clutch release cover. Confirm tab (8) is in clutch release cover slot.
4. Apply a multi-purpose grease to the balls and outer ramp sockets. Place a ball in each of the outer ramp sockets.
5. See Drive and Transmission → CLUTCH RELEASE COVER → Disassemble → Clutch Cable Connection. Connect clutch cable.
   a. Connect cable end to ramp coupling (3).
   b. Install coupling on inner ramp (5).
   c. Place inner ramp and coupling in position in clutch release cover.

WARNING

Wear safety glasses or goggles when removing or installing retaining rings. Retaining rings can slip from the pliers and could be propelled with enough force to cause serious eye injury. (00312a)

6. Install retaining ring.
   a. Center opening of retaining ring above break in ribbing at bottom of clutch release cover.
   b. Install retaining ring (4).

1. Fill transmission. See **Maintenance → REPLACE TRANSMISSION LUBRICANT**.
2. Adjust clutch. See **Maintenance → CHECK AND ADJUST CLUTCH**.
3. Install exhaust system. See **Fuel and Exhaust → EXHAUST SYSTEM**.
4. Install main fuse. See **Electrical → POWER DISCONNECT**

WARNING

To prevent accidental vehicle start-up, which could cause death or serious injury, disconnect negative (-) battery cable before proceeding. (00048a)

1. Disconnect negative battery cable. See **Electrical → POWER DISCONNECT**.
2. Remove rider left footboard and bracket, if necessary. See **Chassis → LEFT FOOT CONTROLS**.
3. **Mid-mount controls:** Remove foot shift lever. See **Drive and Transmission → SHIFTER LINKAGE**.
4. Drain primary chaincase oil. See **Maintenance → REPLACE PRIMARY CHAINCASE LUBRICANT**.

1. See **Drive and Transmission → PRIMARY CHAINCASE COVER → Install → Primary Chaincase Cover**. Remove primary chaincase cover.
   a. Remove cover screws (4, 5).
   b. Remove cover.

Consumables

Description	Part Number	Size
LOCTITE 243 MEDIUM STRENGTH THREADLOCKER AND SEALANT (BLUE)	99642-97	6 ml (¼ fl oz)

1. See **Figure 1**. Verify that all debris is washed from the inside ribs of the cover.
2. Verify hollow dowels (2) are installed properly.
3. Install **new** cover gasket (1).
4. Install cover.
   a. Apply a drop of threadlocker to the threads of each screw. **LOCTITE 243 MEDIUM STRENGTH THREADLOCKER AND SEALANT (BLUE) (99642-97)**
   b. Install cover with screws (4, 5) in positions shown.
   c. See **Figure 2**. Tighten in sequence shown.
   Torque: 16.3–17.6 N·m (144–156 **in-lbs**) *Primary cover screws*

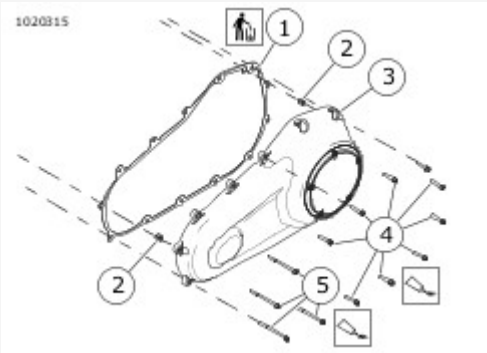

View interactive image

1	Gasket
2	Hollow dowel
3	Cover
4	Screws, short (9)
5	Screws, long (4)

Figure 1. Primary Chaincase Cover

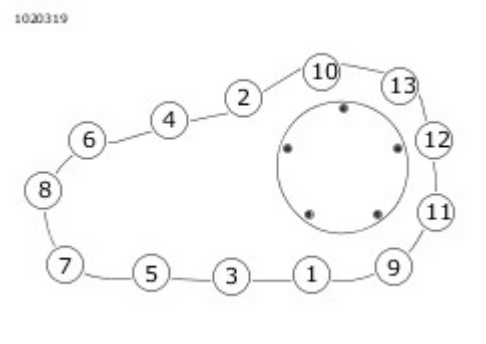

View interactive image

Figure 2. Primary Chaincase Cover Torque Sequence

1. Fill primary chaincase with oil. See **Maintenance → REPLACE PRIMARY CHAINCASE LUBRICANT**.
2. **Mid-mount controls:** Install foot shift lever. See **Drive and Transmission → SHIFTER LINKAGE**.
3. Install rider footboard and bracket, if removed. See **Chassis → LEFT FOOT CONTROLS**.
4. Install negative battery cable. See **Electrical → POWER DISCONNECT**.

WARNING

To prevent accidental vehicle start-up, which could cause death or serious injury, disconnect negative (-) battery cable before proceeding. (00048a)

1. Disconnect negative battery cable. See **Electrical → POWER DISCONNECT**.
2. Remove rider left footboard and bracket, if necessary. See **Chassis → LEFT FOOT CONTROLS**.
3. **Mid-mount controls:** Remove foot shift lever. See **Drive and Transmission → SHIFTER LINKAGE**.
4. Drain primary chaincase oil. See **Maintenance → REPLACE PRIMARY CHAINCASE LUBRICANT**.
5. Remove primary chaincase cover. See **Drive and Transmission → PRIMARY CHAINCASE COVER**.

Special Tools

Description	Part Number	Qty.
PRIMARY DRIVE LOCKING TOOL	HD-47977	1

1. See Drive and Transmission → DRIVE COMPONENTS → Install → Securing Chain Tensioner. Remove chain tensioner.
   a. Install cable strap (2) as shown. Exposed portion of cable strap below cover indicates need for removal before cover installation.
   b. See Drive and Transmission → DRIVE COMPONENTS → Install → Chain Tensioner. Remove chain tensioner fasteners (2).
   c. Remove chain tensioner (1).

NOTE

Clutch hub does not need to be removed when removing compensating sprocket.

2. Mark one of the links of the primary chain for reference during installation.
3. Remove retaining ring and release plate from center of clutch assembly.

NOTE

The mainshaft nut has left-hand threads.

4. See Drive and Transmission → DRIVE COMPONENTS → Install → Removing Clutch Hub Mainshaft Nut. Remove mainshaft nut.
   a. Place special tool between the sprockets as shown.PRIMARY DRIVE LOCKING TOOL (Part Number:HD-47977)
   b. **Wide frame only:** See Drive and Transmission → DRIVE COMPONENTS → Install → Engine Compensating Sprocket Assembly. Discard oil spinner (10).
   c. Drive and Transmission → DRIVE COMPONENTS → Install → Removing Clutch Hub Mainshaft Nut. Rotate clutch hub mainshaft nut (4) clockwise to remove.
5. See Drive and Transmission → DRIVE COMPONENTS → Install → Removing Clutch Hub Mainshaft Nut. Remove compensating sprocket bolt.
   a. Place the primary drive locking tool between the sprockets as shown.
   b. Rotate compensating sprocket bolt (1) counterclockwise to loosen.
   c. See Drive and Transmission → DRIVE COMPONENTS → Install → Engine Compensating Sprocket Assembly. Remove bolt (9), retainer (8) and thrust washer (7).
6. Inspect thrust washers (7) for damage.
7. Clean sprocket retainer (8). Verify that oil holes are clear.

Special Tools

Description	Part Number	Qty.
PRIMARY DRIVE LOCKING TOOL	HD-47977	1

NOTE

The O-ring inside the shaft extension is for manufacturing assembly only and has no replacement part number.

1. See **Drive and Transmission → DRIVE COMPONENTS → Install → Engine Compensating Sprocket Assembly** and **Drive and Transmission → DRIVE COMPONENTS → Install → Spring Washer Orientation**. Install spring washers.
   a. Apply a thin layer of primary chaincase oil to the inner diameter of the compensating sprocket (6) and the splines of shaft extension (1).
   b. Install shaft extension.
   c. Install large spring washers (2) and medium spring washers (3). Outer diameter of spring washers must contact each other.
   d. Install small spring washer (4) so outer diameter contacts sliding cam (5).
2. Install primary chain, compensating sprocket and clutch.
3. Lightly lubricate thrust washer (7). Install components (7, 8) and **new** bolt (9). Hand tighten.

   NOTE

   Clutch hub mainshaft nut has left-hand threads.

4. See **Drive and Transmission → DRIVE COMPONENTS → Install → Installing Clutch Hub Mainshaft Nut**. Install mainshaft nut.
   a. Clean and prime threads of clutch hub mainshaft nut (2).
   b. Apply two drops of LOCTITE 262 HIGH STRENGTH THREADLOCKER AND SEALANT (red) to the threads.
   c. Install nut onto mainshaft. Hand-tighten.
5. See **Drive and Transmission → DRIVE COMPONENTS → Install → Installing Engine Compensating Sprocket Bolt**. Tighten compensating sprocket bolt.
   a. Place special tool between the sprockets as shown.

      Special Tool: **PRIMARY DRIVE LOCKING TOOL** (HD-47977)

   b. Tighten compensating sprocket bolt (1).
      Torque: 135.6 N·m (100 ft-lbs) *Compensating sprocket bolt, 1st torque*
   c. Loosen one-half turn.
   d. Final torque.

Torque: 237.3 N·m (175 ft-lbs) *Compensating sprocket bolt, final torque*

6. **Wide frame only:** See Drive and Transmission → DRIVE COMPONENTS → Install → Engine Compensating Sprocket Assembly. Install **new** oil spinner (10).
7. See Drive and Transmission → DRIVE COMPONENTS → Install → Installing Clutch Hub Mainshaft Nut. Tighten clutch hub mainshaft nut.
   a. Place special tool between the sprockets as shown.

      Special Tool: PRIMARY DRIVE LOCKING TOOL (HD-47977)

   b. Tighten clutch hub mainshaft nut (2).
      Torque: 94.9–108.5 N·m (70–80 ft-lbs) *Clutch hub mainshaft nut*
8. Install release plate and retaining ring into center of clutch assembly.
9. If primary chain tensioner becomes disassembled, assemble in order shown.

   NOTE

   - Primary chain tensioner is non-repairable. If tensioner is worn or damaged, replace assembly.
   - Chain tensioner is not interchangable with previous model year parts. Shoe color is black.

   a. See Figure 9. Locate end of spring rod (2) on roll pin (3).
   b. See Figure 10. Slide wedge (2) of primary chain tensioner in direction of arrow until all travel is removed.
   c. See Figure 1. Push shoe (1) down until it contacts wedge. Keep tension on shoe so wedge stays in place.
   d. Insert cable strap (2) as shown to hold wedge in place. Verify that end of cable strap hangs below primary chain tensioner. Cable strap serves as a reminder to remove before installing primary cover.
10. See Figure 2. Install primary chain tensioner.
    a. Install primary chain tensioner (1) with fasteners (2). Tighten.
       Torque: 28.5–32.6 N·m (21–24 ft-lbs) *Primary chain tensioner fasteners*
    b. Remove cable strap.
11. Set preliminary chain tension.
    a. Check tension at the top span while pulling down on chain midway between sprockets. Correct tension is
       Length: 12.7–15.88 mm (0.500–0.625 in)
    b. If chain is loose, move chain adjuster one notch. Check tension.
    c. Repeat steps until tension is within specification.

       NOTE

       Primary chain tensioner will not complete chain adjustment until vehicle is ridden.

12. Test ride vehicle after tensioner removal/installation to provide proper adjustment.

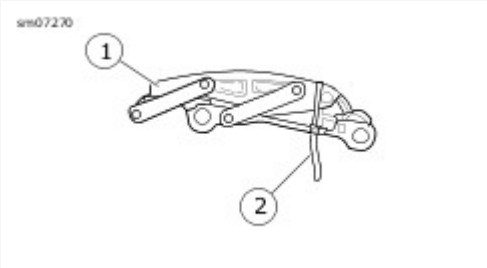

View interactive image

1	Chain tensioner shoe
2	Cable strap

Figure 1. Securing Chain Tensioner

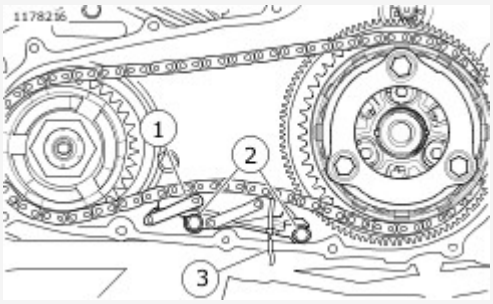

View interactive image

1	Chain tensioner
2	Chain tensioner fasteners
3	Cable strap

Figure 2. Chain Tensioner

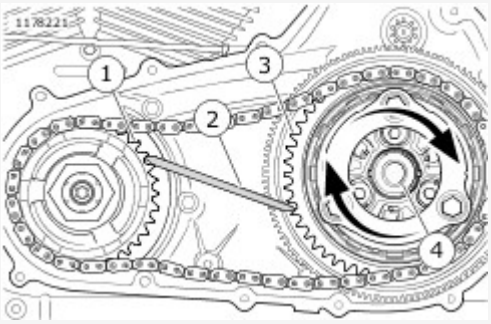

View interactive image

1	Engine compensating sprocket
2	Primary drive locking tool
3	Clutch sprocket
4	Clutch hub mainshaft nut

Figure 3. Removing Clutch Hub Mainshaft Nut

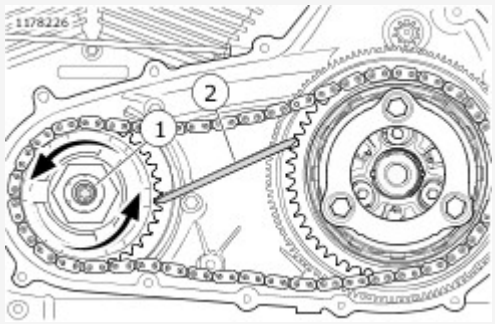

View interactive image

1	Engine compensating sprocket bolt
2	Primary drive locking tool

Figure 4. Removing Clutch Hub Mainshaft Nut

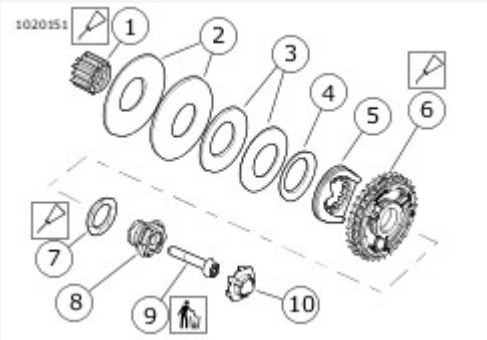

View interactive image

1	Shaft extension
2	Large spring washer (2)
3	Medium spring washer (2)
4	Small spring washer
5	Sliding cam
6	Compensating sprocket

7	Thrust washer
8	Sprocket retainer
9	Bolt
10	Oil spinner (wide frame only)

Figure 5. Engine Compensating Sprocket Assembly

View interactive image

1	Large spring washer (2)
2	Medium spring washer (2)

Figure 6. Spring Washer Orientation

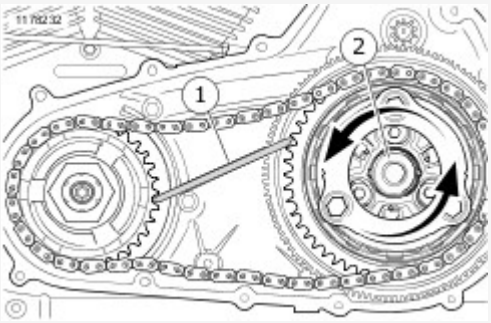

View interactive image

1	Primary drive locking tool
2	Nut

Figure 7. Installing Clutch Hub Mainshaft Nut

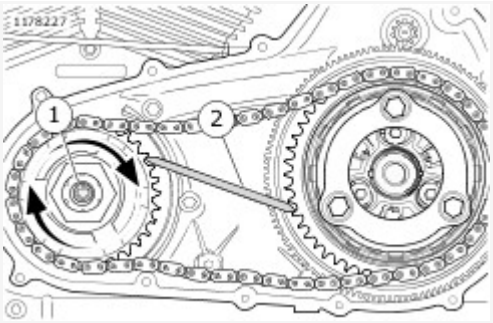

View interactive image

1	Bolt
2	Primary drive locking tool

Figure 8. Installing Engine Compensating Sprocket Bolt

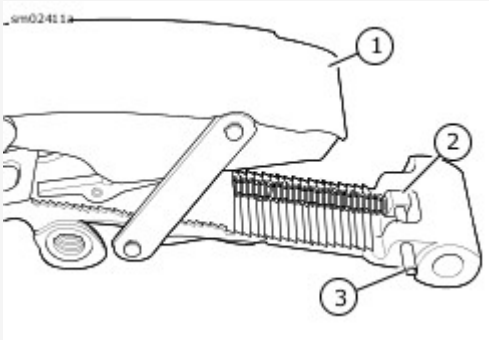

View interactive image

1	Shoe
2	Spring rod
3	Roll pin

Figure 9. Spring Rod Location

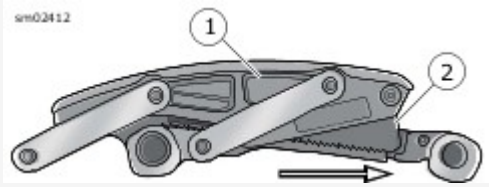

View interactive image

1	Shoe
2	Wedge

Figure 10. Primary Chain Tensioner

1. Install primary chaincase cover. See **Drive and Transmission → PRIMARY CHAINCASE COVER**.
2. Fill primary chaincase with oil. See **Maintenance → REPLACE PRIMARY CHAINCASE LUBRICANT**.
3. **Mid-mount controls:** Install foot shift lever. See **Drive and Transmission → SHIFTER LINKAGE**.
4. Install rider footboard and bracket, if removed. See **Chassis → LEFT FOOT CONTROLS**.
5. Install negative battery cable. See **Electrical → POWER DISCONNECT**.

WARNING

To prevent accidental vehicle start-up, which could cause death or serious injury, disconnect negative (-) battery cable before proceeding. (00048a)

1. Disconnect negative battery cable. See **Electrical → POWER DISCONNECT**.
2. Remove rider left footboard and bracket, if necessary. See **Chassis → LEFT FOOT CONTROLS**.
3. **Mid-mount controls:** Remove foot shift lever. See **Drive and Transmission → SHIFTER LINKAGE**.
4. Drain primary chaincase oil. See **Maintenance → REPLACE PRIMARY CHAINCASE LUBRICANT**.
5. Remove primary chaincase cover. See **Drive and Transmission → PRIMARY CHAINCASE COVER**.

To replace the entire clutch assembly, see [Drive and Transmission → DRIVE COMPONENTS](#).

Disassemble

1. See [Drive and Transmission → CLUTCH → Disassemble and Assemble: Clutch Pack → Clutch Shell Assembly](#).
   Remove pressure plate (5).
   a. Remove bolts (1).
   b. Remove spring stopper plate (14).
   c. Remove springs (3).
   d. Remove spring seats (4).
2. Remove friction and steel plates.
   a. Remove narrow friction plates (6) and narrow steel plate (7).
   b. Remove wide friction plates (9) and wide steel plates (8).
   c. Remove narrow friction plate (6).
3. Remove damper spring.
   a. Remove damper spring (10).
   b. Remove damper spring seat (11).

Clean and Inspect

WARNING

Compressed air can pierce the skin and flying debris from compressed air could cause serious eye injury. Wear safety glasses when working with compressed air. Never use your hand to check for air leaks or to determine air flow rates. (00061a)

NOTE

Friction and steel plates are only sold as a set.

1. **NOTE**

   Do not wash friction plates or hub bearing with cleaning solvent.

   Wash parts in cleaning solvent. Dry with low-pressure compressed air.
2. Check friction plates.

   NOTE

   Do not use a rag to clean friction plates.

   a. Remove lubricant using compressed air.
   b. Measure thickness of each plate.
   c. If the thickness of any plate is less than the specification,

replace entire clutch disc set.
Length/Dimension/Distance: 3.62 mm (0.143 in)

d. Look for worn or damaged fiber surface material (both sides).

3. Check steel plates for distortion.
   a. Replace entire clutch disc set if any steel plates are grooved.
   b. Lay plate on a precision flat surface.
   c. Using a feeler gauge, check for distortion in several places.
   d. If any steel plate is warped beyond specification, replace entire clutch disc set.
   Length/Dimension/Distance: 0.15 mm (0.006 in)
4. Check clutch hub bearing for smooth operation. Replace if necessary. See **Drive and Transmission → CLUTCH → Disassemble and Assemble: Hub**.
5. Check clutch shell chain sprocket and starter ring gear. Replace if worn or damaged.
6. Check clutch hub and shell steel plate slots for wear or damage. Replace if necessary.
7. Check coil springs for wear or damage. Replace if necessary.

Assemble

1. Submerge and soak all friction plates in primary chaincase lubricant for at least five minutes.
2. See **Drive and Transmission → CLUTCH → Disassemble and Assemble: Clutch Pack → Clutch Shell Assembly**.
   Install Damper spring.
   a. Install damper spring seat (11) into clutch hub (12).
   b. Install damper spring (10) onto damper spring seat.
3. Install friction and steel plates.
   a. Install one narrow friction plate (6) into clutch hub.
   b. Install one wide steel plate (8) onto narrow friction plate and damper spring (10).
   c. Beginning with a wide friction plate (9), alternate remaining wide friction plates (9) with wide steel plates (8).
   d. Install narrow friction plate (6), narrow steel plate (7) and remaining friction plate (6).
4. Install pressure plate (5).
   a. Install spring seats (4).
   b. Align and install pressure plate (5) onto clutch hub (12).
   c. Install springs (3).
   d. Install spring stopper plate (14).
   e. Install bolts (1).
   Torque: 8–12 N·m (71–106 **in-lbs**)

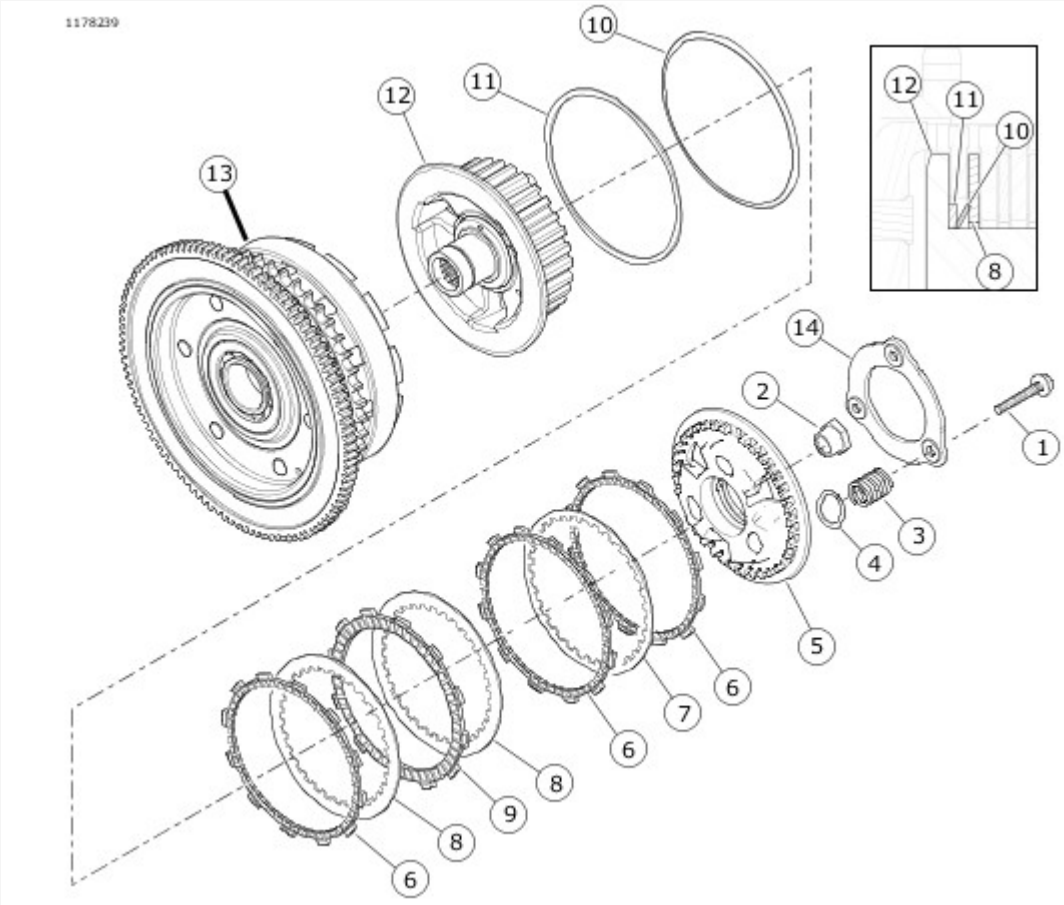

View interactive image

1	Bolt (3)
2	Mainshaft nut
3	Coil spring (3)
4	Seat (3)
5	Pressure plate
6	Narrow friction plate (3)
7	Narrow steel plate (1)
8	Wide steel plate (8)
9	Wide friction plate (7)
10	Damper spring
11	Damper spring seat
12	Clutch hub
13	Clutch shell
14	Spring stopper plate

Figure 1. Clutch Shell Assembly

Disassemble

WARNING

Wear safety glasses or goggles when removing or installing retaining rings. Retaining rings can slip from the pliers and could be propelled with enough force to cause serious eye injury. (00312a)

NOTE

Do not disassemble the clutch shell and hub assembly unless the bearing, hub or shell require replacement. Replace the bearing if disassembled.

1. Press out clutch hub.
   a. See Figure 1. Remove clutch hub retaining ring (2).
   b. See Figure 2. Support clutch shell in press with ring gear side up.
   c. Press hub from bearing in clutch shell.
2. Remove bearing.
   a. See Figure 1. Remove bearing retaining ring (1) from groove in clutch shell bore.
   b. See Figure 2. Support clutch shell in press with ring gear side is down.
   c. Use a suitable press plug to remove bearing.
3. Clean and inspect components. See Drive and Transmission → CLUTCH → Disassemble and Assemble: Clutch Pack.

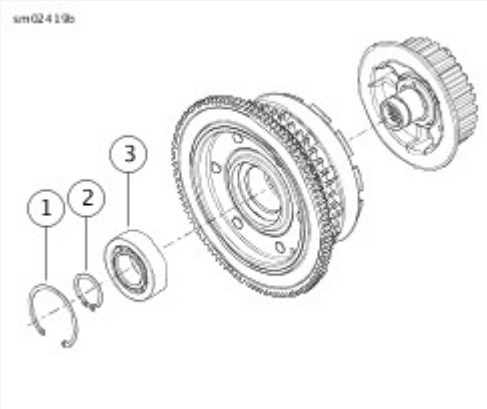

View interactive image

1	Clutch hub retaining ring
2	Bearing retaining ring
3	Bearing

Figure 1. Clutch Retaining Rings

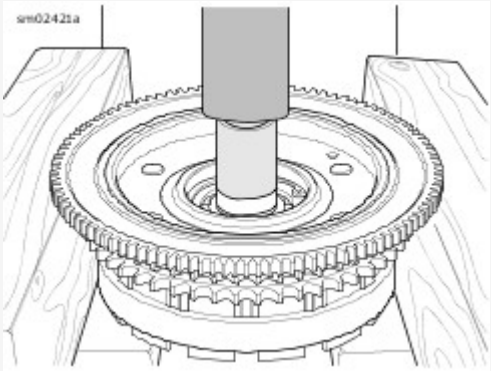

View interactive image

Figure 2. Pressing Clutch Hub From Bearing

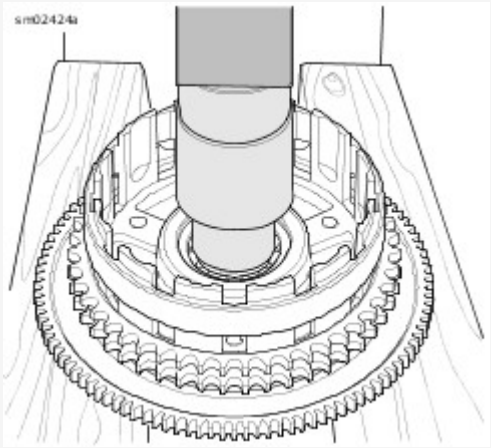

View interactive image

Figure 3. Pressing Bearing From Clutch Shell

Assemble

1. Install **new** bearing.
   a. Place clutch shell in press with ring gear side up.
   b. Support clutch shell bore on sprocket side to avoid damage to ears on clutch basket.
   c. Using a suitable press plug, press against outer race until bearing contacts shoulder in clutch shell bore.
   d.

WARNING

Wear safety glasses or goggles when removing or installing retaining rings. Retaining rings can slip from the pliers and could be propelled with enough force to cause serious eye injury. (00312a)

See Figure 1. Install bearing retaining ring (1) with flat side toward bearing.

2. Install clutch hub.
   a. Place clutch shell in press with sprocket side up.
   b. Center the hub in bearing.
   c. Support bearing inner race with a sleeve on transmission side.
   d. Press hub into bearing until shoulder contacts bearing inner race.
   e. See **Figure 1**. Install clutch hub retaining ring (2) in groove of clutch hub.

1. Install primary chaincase cover. See **Drive and Transmission → PRIMARY CHAINCASE COVER**.
2. Fill primary chaincase with oil. See **Maintenance → REPLACE PRIMARY CHAINCASE LUBRICANT**.
3. **Mid-mount controls:** Install foot shift lever. See **Drive and Transmission → SHIFTER LINKAGE**.
4. Install rider footboard and bracket, if removed. See **Chassis → LEFT FOOT CONTROLS**.
5. Install negative battery cable. See **Electrical → POWER DISCONNECT**.

WARNING

To prevent accidental vehicle start-up, which could cause death or serious injury, disconnect negative (-) battery cable before proceeding. (00048a)

1. Disconnect negative battery cable. See **Electrical → POWER DISCONNECT**.
2. Remove rider footboard and bracket, if needed. See **Chassis → LEFT FOOT CONTROLS**.
3. **Mid-mount controls:** Remove foot shift lever. See **Drive and Transmission → SHIFTER LINKAGE**.
4. Drain primary chaincase oil. See **Maintenance → REPLACE PRIMARY CHAINCASE LUBRICANT**.
5. Remove primary chaincase cover. See **Drive and Transmission → PRIMARY CHAINCASE COVER**.
6. Remove starter. See **Electrical → STARTER**.
7. Remove primary chain, clutch and compensating sprocket. See **Drive and Transmission → DRIVE COMPONENTS**.

1. See **Figure 1**. Remove five sealing screws (5).
2. Remove primary chaincase housing (6).
3. Discard the crankcase gasket (7) and sealing screws.

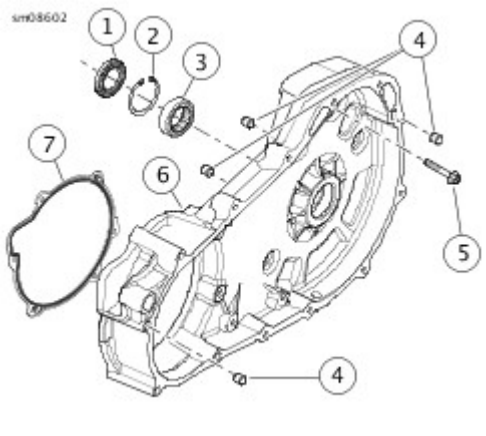

View interactive image

1	Seal
2	Retaining ring
3	Bearing
4	Hollow dowel (4)
5	Sealing screw (5)
6	Primary chaincase housing
7	Crankcase gasket

Figure 1. Primary Chaincase Housing

1. Inspect primary chaincase for cracks or damaged gasket surface.
2. Check the mainshaft bearing. Replace if bearing does not rotate freely. See **Drive and Transmission → PRIMARY CHAINCASE HOUSING → Mainshaft Bearing and Seal**.
3. Replace the oil seal. See **Drive and Transmission → PRIMARY CHAINCASE HOUSING → Mainshaft Bearing and Seal**.
4. Inspect shifter shaft bushing. Replace if necessary. See **Drive and Transmission → PRIMARY CHAINCASE HOUSING → Shifter Shaft Bushing**.

NOTE

Cover mainshaft clutch hub splines with tape to prevent the splines from damaging the primary housing inner oil seal.

1. See **Figure 2**. Install gasket on surface (2). Verify dowels in gasket engage dowel holes (3).
2. Spread a film of oil on mainshaft oil seal lip and rubber portion of crankcase gasket.
3. Install primary chaincase housing.
   a. See **Figure 3**. Install **new** sealing screws.
   b. See **Figure 4**. Tighten in sequence shown.
   Torque: 35.3–38 N·m (26–28 ft-lbs) *Primary chaincase sealing screws*

View interactive image

1	Dowel
2	Crankcase gasket

Figure 1. Crankcase Gasket

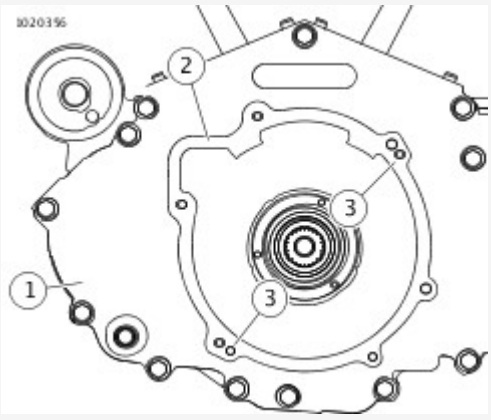

View interactive image

1	Crankcase

2	Gasket surface
3	Dowel holes

Figure 2. Crankcase

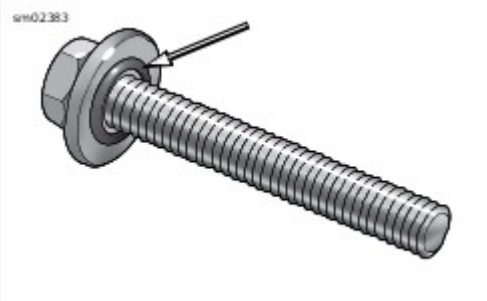

View interactive image

Figure 3. Primary Chaincase Sealing Screw

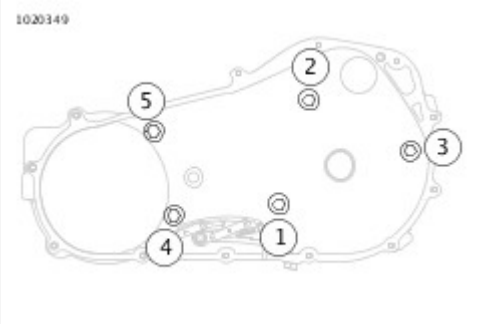

View interactive image

Figure 4. Sealing Screw Tightening Sequence

Remove

1. Remove seal with a seal remover or rolling head pry bar for best results.

> **WARNING**
>
> Wear safety glasses or goggles when removing or installing retaining rings. Retaining rings can slip from the pliers and could be propelled with enough force to cause serious eye injury. (00312a)

2. See Figure 1. Remove retaining ring (1).

> **NOTE**
>
> Support the bearing support area on the transmission side of the primary chaincase while pressing out bearing.

3. Place inner primary chaincase in a press with clutch side up.
4. Press out bearing from clutch side.

Install

1. Verify that the bearing bore is clean and smooth.

> **NOTE**
>
> Support the bearing support area on the clutch side of the primary chaincase while pressing bearing.

2. Place primary chaincase in a press with the transmission side up.
3. Install **new** bearing with letter side up.
   a. Apply a thin film of oil to outer diameter of bearing.
   b. Press outer race until it makes solid contact with the bearing support area.
4. See Figure 1. Install retaining ring.
   a. Retaining ring (1) must not block oil passage (2).
   b. Verify that the ring is fully seated in the groove.
5. Install mainshaft oil seal.
   a. Lubricate the OD of the **new** seal with SCREAMIN' EAGLE ASSEMBLY LUBE.
   b. Place over bore with the lip garter spring side (stamped "OIL SIDE") facing toward the bearing.
   c. Press against the outer rim of oil seal the seal until seal is flush with machined surface of inner primary housing.
6. Lubricate the bearing and seal lip with multi-purpose grease or SCREAMIN' EAGLE ASSEMBLY LUBE.

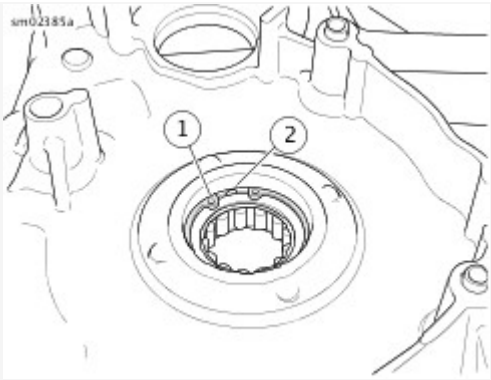

View interactive image

1	Retaining ring
2	Oil passage

Figure 1. Retaining Ring Orientation

Special Tools

Description	Part Number	Qty.
BEARING RACE REMOVER AND INSTALLER KIT	HD-34902-C	1

Remove

NOTE

Use only **BEARING RACE REMOVER AND INSTALLER KIT (Part Number:HD-34902-C)**.

1. See **Figure 1**. Remove bearing inner race using **BEARING RACE REMOVER AND INSTALLER KIT (Part Number:HD-34902-C)**.

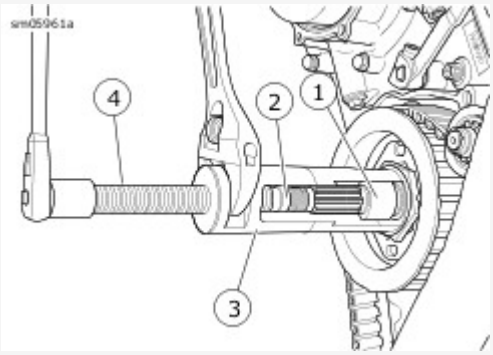

View interactive image

1	Bearing inner race
2	End cap
3	Puller
4	Forcing screw

Figure 1. Pulling Mainshaft Inner Bearing Race

Install

1. See **Figure 2**. Install bearing inner race (1) onto mainshaft using **BEARING RACE REMOVER AND INSTALLER KIT (Part Number:HD-34902-C)**.
2. Lubricate race with SCREAMIN' EAGLE ASSEMBLY LUBE.

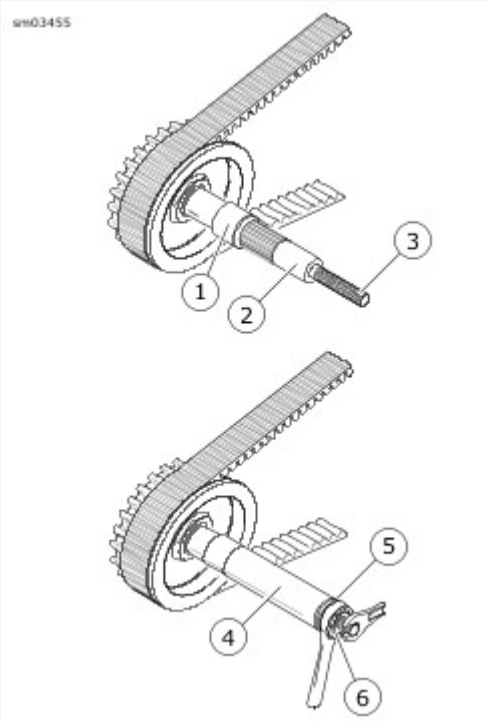

View interactive image

1	Bearing inner race
2	Extension shaft
3	Wrench flat
4	Installer sleeve
5	Washer (2)
6	Nut

Figure 2. Installing Bearing Race

1. See **Figure 1**. Press out old bushing (1) from front to back.
2. Inspect the bushing bore to verify that it is clean and smooth.
3. Press **new** bushing from back of chaincase until it is flush to 0.51 mm (0.020 in) below edge of bore.

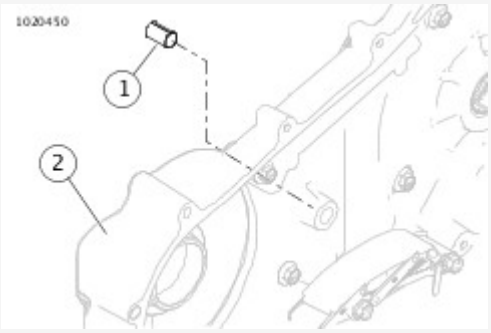

View interactive image

1	Shifter shaft bushing
2	Primary chaincase

Figure 1. Shifter Shaft Bushing

1. Install the primary chain, clutch, compensating sprocket and chain tensioner. See **Drive and Transmission → DRIVE COMPONENTS**.
2. Install starter. See **Electrical → STARTER**.
3. Install primary chaincase cover and **new** gasket. See **Drive and Transmission → PRIMARY CHAINCASE COVER**.
4. Fill primary chaincase oil. See **Maintenance → REPLACE PRIMARY CHAINCASE LUBRICANT**.
5. **Mid-mount controls:** Install foot shift lever. See **Drive and Transmission → SHIFTER LINKAGE**.
6. Install rider left footboard and bracket, if removed. See **Chassis → LEFT FOOT CONTROLS**.
7. Connect negative battery cable. See **Electrical → POWER DISCONNECT**.

1. Drain engine oil. See **Maintenance → REPLACE ENGINE OIL AND FILTER**.

1. See **Drive and Transmission → ENGINE OIL FILL SPOUT → Install → Engine Oil Fill Spout**. Remove screws (4).
2. Remove fill spout (3).
3. Discard O-ring (1).

1. See **Figure 1**. Install **new** O-ring (1).
2. Install fill spout.
   a. Install fill spout (3).
   b. Install screws (4). Tighten.
      Torque: 11.3–13.6 N·m (100–120 **in-lbs**) *Engine oil fill spout screw.*

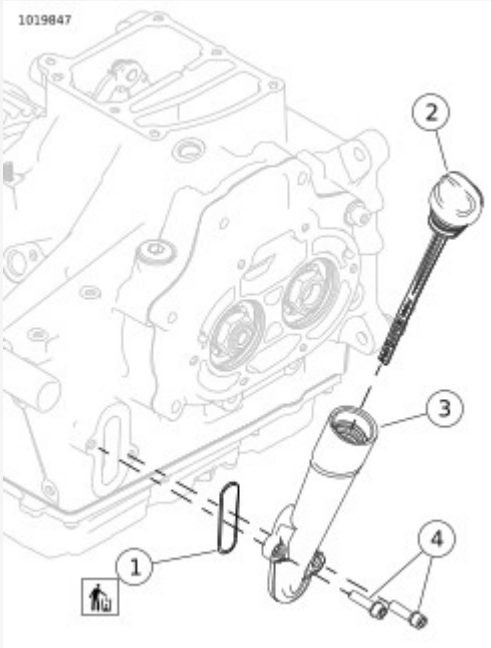

View interactive image

1	O-ring
2	Dipstick
3	Fill spout
4	Screw (2)

Figure 1. Engine Oil Fill Spout

1. Fill engine oil. See **Maintenance → REPLACE ENGINE OIL AND FILTER**.

WARNING

To prevent accidental vehicle start-up, which could cause death or serious injury, disconnect negative (-) battery cable before proceeding. (00048a)

1. Disconnect negative battery cable. See **Electrical → POWER DISCONNECT**.
2. Remove rider footboard and bracket, if needed. See **Chassis → LEFT FOOT CONTROLS**.
3. **Mid-mount controls:** Remove foot shift lever. See **Drive and Transmission → SHIFTER LINKAGE**.
4. Drain primary chaincase oil. See **Maintenance → REPLACE PRIMARY CHAINCASE LUBRICANT**.
5. Remove primary chaincase cover. See **Drive and Transmission → PRIMARY CHAINCASE COVER**.
6. Remove starter. See **Electrical → STARTER**.
7. Remove primary chain, clutch and compensating sprocket. See **Drive and Transmission → DRIVE COMPONENTS**.
8. Remove primary chaincase housing. See **Drive and Transmission → PRIMARY CHAINCASE HOUSING**.
9. Loosen drive belt. See **Maintenance → INSPECT AND ADJUST DRIVE BELT AND SPROCKETS**.

Special Tools

Description	Part Number	Qty.
FINAL DRIVE SPROCKET LOCKING TOOL	HD-46282A	1
MAINSHAFT LOCKNUT WRENCH	HD-47910	1
PILOT	HD-94660-2	1

NOTE

- Loosen sprocket nut only while transmission is installed in frame. Otherwise damage to transmission or transmission stand results.
- Sprocket nut has a right-hand thread.

1. See Figure 1. Remove sprocket nut.
   a. Remove two screws (1) and lockplate (2).
   b. See Figure 2. Install FINAL DRIVE SPROCKET LOCKING TOOL (Part Number:HD-46282A) (2) with arm of tool against bottom of rear fork pivot (1).
   c. Install PILOT (Part Number:HD-94660-2) on mainshaft.
   d. Remove the sprocket nut (3) using MAINSHAFT LOCKNUT WRENCH (Part Number:HD-47910) (1).
2. Remove sprocket, allowing belt to slip from sprocket as sprocket is removed.

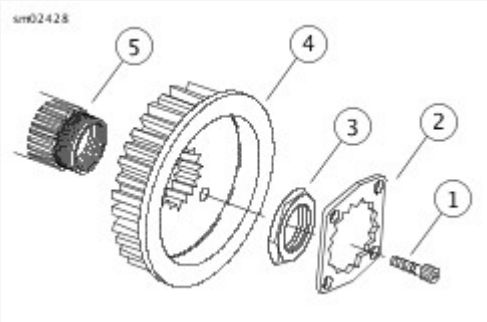

View interactive image

1	Screw (2)
2	Lockplate
3	Sprocket nut
4	Sprocket
5	Main drive gear

Figure 1. Transmission Sprocket

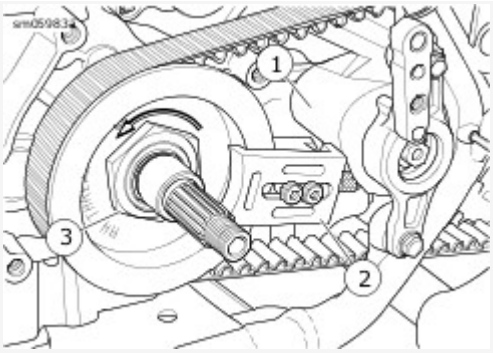

View interactive image

1	Rear fork pivot
2	Final drive sprocket locking tool
3	Sprocket nut

Figure 2. Sprocket Nut Removal

1. Using a non-volatile cleaning solvent, clean sprocket of all grease and dirt.
2. Inspect belt and sprocket. See **Maintenance → INSPECT AND ADJUST DRIVE BELT AND SPROCKETS**.
3. Inspect main drive gear and mainshaft seals. Replace if damaged.

Special Tools

Description	Part Number	Qty.
FINAL DRIVE SPROCKET LOCKING TOOL	HD-46282A	1
MAINSHAFT LOCKNUT WRENCH	HD-47910	1
PILOT	HD-94660-2	1
TORQUE ANGLE GAUGE	TA360	1

Consumables

Description	Part Number	Size
LOCTITE 271 HIGH STRENGTH THREADLOCKER AND SEALANT (RED)	Loctite 271	-

NOTE

- Tighten sprocket nut only while transmission is installed in frame. Otherwise damage to transmission or transmission stand results.
- Never get oil on the threads of the sprocket nut.
- The transmission sprocket nut has **right-hand** threads.

1. Place transmission sprocket in position. Install the belt as the sprocket is installed.
2. Install sprocket nut.
   a. See **Drive and Transmission → TRANSMISSION SPROCKET → Remove → Transmission Sprocket**. Apply a film of clean engine oil to the mating surfaces of the sprocket nut (3) and the sprocket (4).
   b. Apply threadlocker to the threads of the sprocket nut. **LOCTITE 271 HIGH STRENGTH THREADLOCKER AND SEALANT (RED) (Loctite 271)**
   c. Install the sprocket nut finger-tight.
   d. See **Figure 1**. Install special tool (2) resting against the rear fork pivot (3).

      Special Tool: **FINAL DRIVE SPROCKET LOCKING TOOL** (HD-46282A)

   e. Install special tool on mainshaft.

      Special Tool: **PILOT** (HD-94660-2)

   f. Using special tool, tighten sprocket nut to initial torque.
      Torque: 135.6 N·m (100 ft-lbs) *Transmission sprocket nut, 1st torque*

Special Tool: **MAINSHAFT LOCKNUT WRENCH** (HD-47910)

3. Loosen sprocket nut one full turn.
4. Tighten to second torque.
   Torque: 47.5 N·m (35 ft-lbs) *Transmission sprocket nut, 2nd torque*

NOTE

5. See **Figure 2**. Scribe lines (3) or use special tool for final torque.

   Special Tool: **TORQUE ANGLE GAUGE** (TA360)

6. Turn sprocket nut to specification.
   Torque: 35–40° (35–40°) *Transmission sprocket nut, final torque*

NOTE
■ The lockplate can be installed either side out. ■ Never LOOSEN nut to align screw holes. ■ If necessary, tighten the nut slightly to align lockplate. ■ Do not exceed a final torque of 45 degrees.

7. Install lockplate.
   a. Align lockplate holes with tapped holes in sprocket.
   b. See **Drive and Transmission → TRANSMISSION SPROCKET → Remove → Transmission Sprocket**.
      Install two **new** screws (1). Tighten.
      Torque: 10.2–13.6 N·m (90–120 **in-lbs**) *Transmission sprocket lockplate screws*

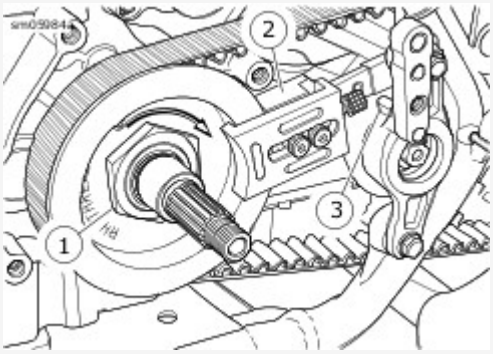

View interactive image

1	Sprocket nut
2	Final drive sprocket locking tool
3	Rear fork pivot

Figure 1. Sprocket Nut Installation

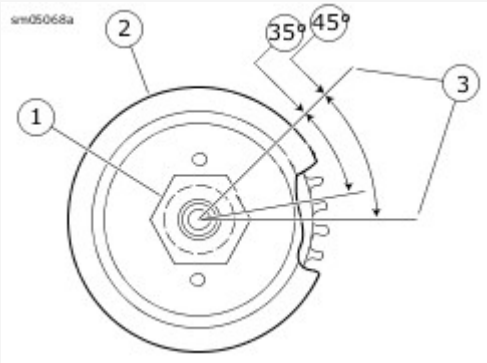

View interactive image

1	Transmission sprocket nut
2	Transmission sprocket
3	Scribed lines

Figure 2. Transmission Sprocket Nut Final Tightening

1. Install primary chaincase housing. See **Drive and Transmission → PRIMARY CHAINCASE HOUSING**.
2. Install the primary chain, clutch, compensating sprocket and chain tensioner. See **Drive and Transmission → DRIVE COMPONENTS**.
3. Install starter. See **Electrical → STARTER**.
4. Install primary chaincase cover and **new** gasket. See **Drive and Transmission → PRIMARY CHAINCASE COVER**.
5. Fill primary chaincase oil. See **Maintenance → REPLACE PRIMARY CHAINCASE LUBRICANT**.
6. **Mid-mount controls:** Install foot shift lever. See **Drive and Transmission → SHIFTER LINKAGE**.
7. Install rider left footboard and bracket, if removed. See **Chassis → LEFT FOOT CONTROLS**.
8. Adjust drive belt deflection. See **Maintenance → INSPECT AND ADJUST DRIVE BELT AND SPROCKETS**.
9. Verify rear fork pivot shaft torque. See **Chassis → REAR FORK**.
10. Connect negative battery cable. See **Electrical → POWER DISCONNECT**.

WARNING

To prevent accidental vehicle start-up, which could cause death or serious injury, disconnect negative (-) battery cable before proceeding. (00048a)

1. Disconnect negative battery cable. See **Electrical → POWER DISCONNECT**.
2. Drain transmission oil. See **Maintenance → REPLACE TRANSMISSION LUBRICANT**.
3. Drain engine oil. See **Maintenance → REPLACE ENGINE OIL AND FILTER**.
4. Remove exhaust system. See **Fuel and Exhaust → EXHAUST SYSTEM**.
5. Remove engine oil fill spout. See **Drive and Transmission → ENGINE OIL FILL SPOUT**.
6. Remove clutch release cover. See **Drive and Transmission → CLUTCH RELEASE COVER**.
7. Remove rider footboard and bracket, if needed. See **Chassis → LEFT FOOT CONTROLS**.
8. **Mid-mount controls:** Remove foot shift lever. See **Drive and Transmission → SHIFTER LINKAGE**.
9. Drain primary chaincase oil. See **Maintenance → REPLACE PRIMARY CHAINCASE LUBRICANT**.
10. Remove primary chaincase cover. See **Drive and Transmission → PRIMARY CHAINCASE COVER**.
11. Remove starter. See **Electrical → STARTER**.
12. Remove primary chain, clutch and compensating sprocket. See **Drive and Transmission → DRIVE COMPONENTS**.
13. Remove primary chaincase housing. See **Drive and Transmission → PRIMARY CHAINCASE HOUSING**.
14. Loosen drive belt. See **Maintenance → INSPECT AND ADJUST DRIVE BELT AND SPROCKETS**.
15. Remove transmission mainshaft bearing inner race. See **Drive and Transmission → PRIMARY CHAINCASE HOUSING → Mainshaft Bearing Inner Race**.

NOTE

Do not remove the transmission case unless the case requires replacement. See **Drive and Transmission → TRANSMISSION CASE**.

1. See **Figure 1**. Remove oil slinger assembly and pushrod from main shaft.
2. Remove transmission top cover.
3. See **Figure 2**. Set a rag over the transmission case.
4. Set shifter cam pawl on rag.
5. Cover mainshaft clutch hub splines with tape to prevent damaging the main drive gear bearings and oil seal.

NOTE

See **Figure 3**. Always pry bearing housing loose. Never tap on shafts to remove transmission assembly. The bearing housing bearings will be damaged.

6. See **Figure 4**. Remove the transmission and bearing housing assembly:
   a. Remove the transmission bearing housing screws (1).
   b. See **Figure 3**. Pry the bearing housing loose.
   c. Remove bearing housing and transmission components from transmission case as an assembly.

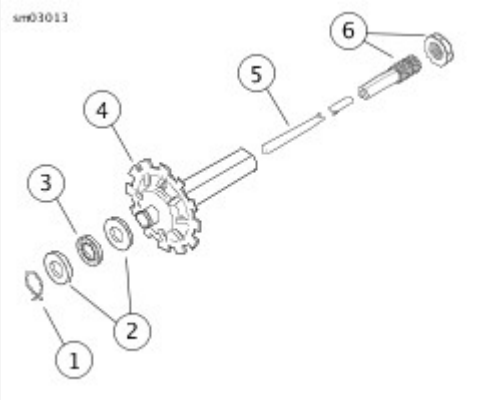

View interactive image

1	Retaining ring
2	Thrust washer (2)
3	Throw out bearing
4	Oil slinger
5	Push rod
6	Push rod end, left side

Figure 1. Push Rod Assembly

View interactive image

1	Shifter pawl
2	Rag

Figure 2. Transmission Shifter Pawl

View interactive image

Figure 3. Bearing Housing Pry Point

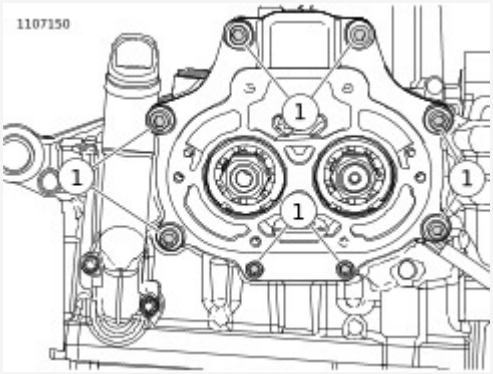

View interactive image

1	Screw (8)

Figure 4. Bearing Housing Screws

1. Cover mainshaft clutch hub splines with tape to prevent damaging the main drive gear bearings and oil seal.
2. Install a **new** gasket on the ring dowels.
3. Apply clean transmission lubricant to the main drive gear bearings.

NOTE
Verify that transmission filler plug/dipstick is removed.

4. Install the transmission assembly in the transmission case.
5. See **Drive and Transmission → TRANSMISSION → Remove → Bearing Housing Screws**. Install transmission bearing housing.
   a. Install screws (1).
   b. See **Figure 1**. Tighten in sequence to 29.8–33.9 N·m (22–25 ft-lbs).

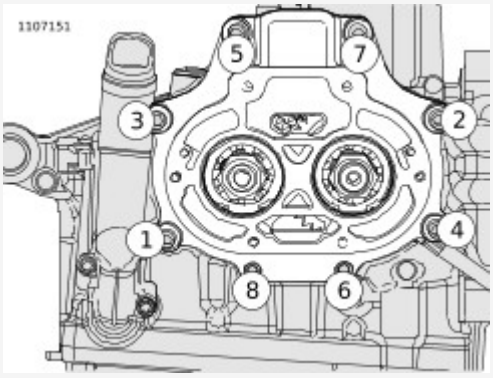

View interactive image

Figure 1. Transmission Bearing Housing Tightening Sequence

6. Install top cover.
   a. Set shifter cam pawl on shift cam.
   b. Inspect transmission top cover gasket. Replace as necessary.
   c. Install transmission top cover and screws. Tighten. Torque: 14.9–17.6 N·m (132–156 **in-lbs**) *Transmission top cover*
7. Install vent hose to top cover fitting, if removed.
8. See **Drive and Transmission → TRANSMISSION → Remove → Push Rod Assembly**. Install pushrod assembly (2-5) in mainshaft hole.
   a. Install **new** retaining ring (1) if removed.

Remove Shift Cam and Shifter Forks

1. See Figure 1. Remove shift fork shafts:
   a. Set bearing housing on bench with shafts pointing up.

NOTE

Shafts have slight interference fit.

   b. Remove shift fork shafts using spiral-flute screw extractor (14) or vise grips.
   c. Mark end of shaft to aid assembly.
2. Remove shift forks from dog rings.
3. See Figure 2. Remove lock plate (2). Discard screws (3).
4. Hold detent arm back and remove shift cam (4).
5. See Figure 3. If needed, remove detent assembly.
   a. Remove detent screw (1), detent arm (2), sleeve (3) and detent spring (4).
   b. Discard detent screw.

NOTE

Mark parts so they can be installed in same direction as removed.

6. See Figure 4. Remove mainshaft and countershaft locknuts.
   a. Lock two gears in place using dog rings.
   b. Temporarily put transmission assembly into transmission case.
   c. Remove locknuts.
   d. Remove transmission assembly from transmission case.

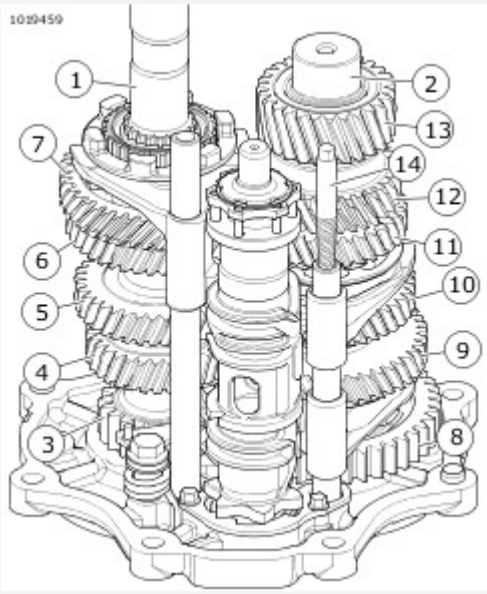

View interactive image

1	Mainshaft
2	Countershaft
3	Mainshaft first gear

4	Mainshaft second gear
5	Mainshaft third gear
6	Mainshaft fourth gear
7	Mainshaft fifth gear
8	Countershaft first gear
9	Countershaft second gear
10	Countershaft third gear
11	Countershaft fourth gear
12	Countershaft fifth gear
13	Countershaft sixth gear
14	Screw extractor

Figure 1. Gear Set

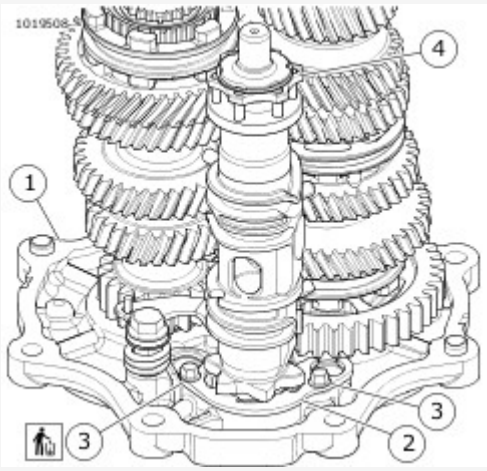

View interactive image

1	Bearing housing
2	Lock plate
3	Lock plate screw (2)
4	Shift cam

Figure 2. Shift Drum

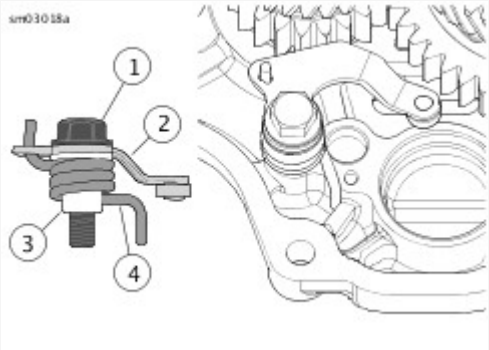

View interactive image

1	Detent screw
2	Detent arm
3	Sleeve
4	Detent spring

Figure 3. Detent Assembly

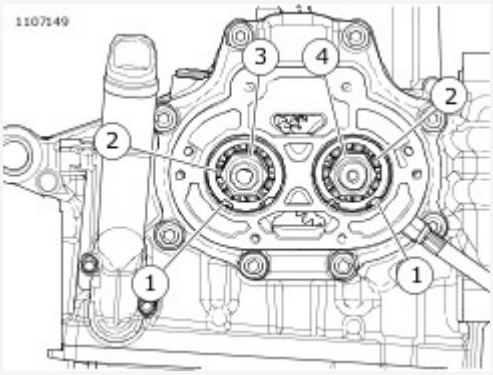

View interactive image

1	Retaining ring (2)
2	Bearing (2)
3	Mainshaft locknut
4	Countershaft locknut

Figure 4. Bearing Housing Locknuts

Remove Mainshaft

NOTE

- The mainshaft fourth gear, third gear, second gear and first gear are integral parts of the shaft. Damage to any gear requires mainshaft replacement.
- Always replace bearing housing bearings.

1. See Figure 5. Using 714 (OTC HORSESHOE LOCK RING PLIERS,), remove retaining ring.
2. Remove dog ring (3), guiding hub (2), mainshaft fifth gear (4) and bearing.

NOTE

Do not press directly on the end of the mainshaft. Use a spacer between the end of the mainshaft and the press ram.

3. Press mainshaft out of bearing housing bearing.
4. Replace bearing housing bearing. See procedure later in this section.

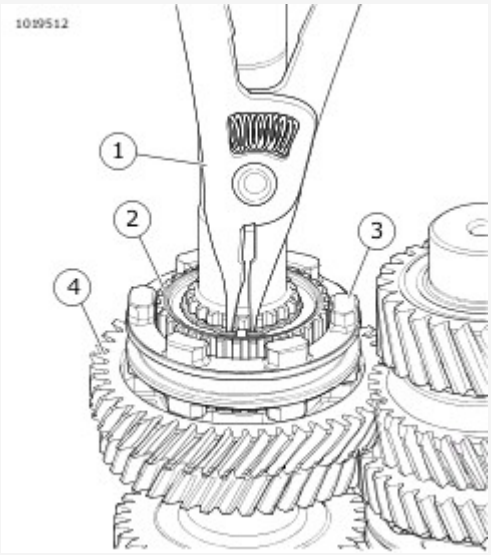

View interactive image

1	Retaining ring pliers
2	Guiding hub
3	Dog ring
4	Mainshaft fifth gear

Figure 5. Mainshaft Fifth Gear

Remove Countershaft

NOTE

Do not press directly on the end of the countershaft. Place a spacer between the end of the countershaft and the press ram.

1. If mainshaft is not removed, hold countershaft third and fourth gear shift dog up while removing countershaft.
2. Press countershaft out of bearing housing bearing.
3. See Figure 6. Remove washer (1), countershaft first gear (2) and bearing.

4. Remove countershaft second, third and forth gears.
    a. See Figure 7. Remove dog ring (5).
    b. Remove lock ring (1).
    c. Remove securing segments (2).
    d. Remove guiding hub (3), countershaft second gear (4) and bearing.
    e. See Figure 8 and Figure 9. Repeat steps with third and fourth gears.

NOTE

The countershaft fifth gear and sixth gear are integral parts of the shaft. Damage to either gear requires countershaft replacement.

5. Replace bearing housing bearing. See procedure later in this section.

View interactive image

1	Washer
2	Countershaft scissor first gear

Figure 6. Countershaft First Gear

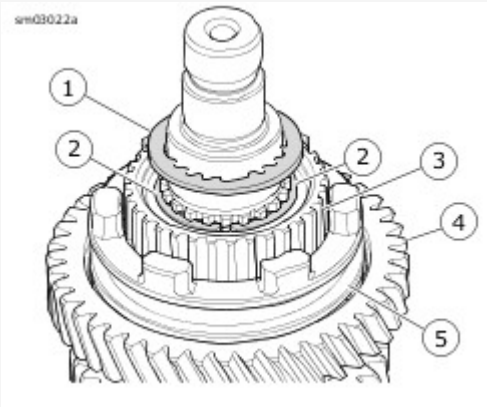

View interactive image

1	Lock ring

2	Securing segment (2)
3	Guiding hub
4	Countershaft second gear
5	Dog ring

Figure 7. Countershaft Second Gear

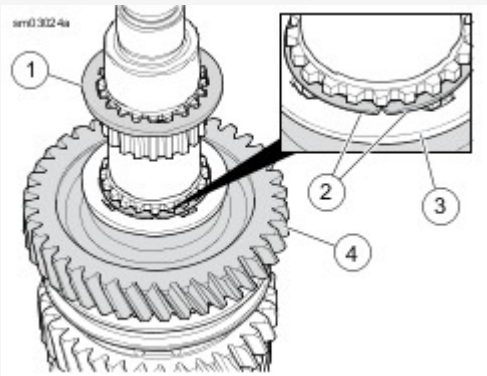

View interactive image

1	Lock ring
2	Securing segment (2)
3	Internal spline washer
4	Countershaft third gear

Figure 8. Countershaft Third Gear

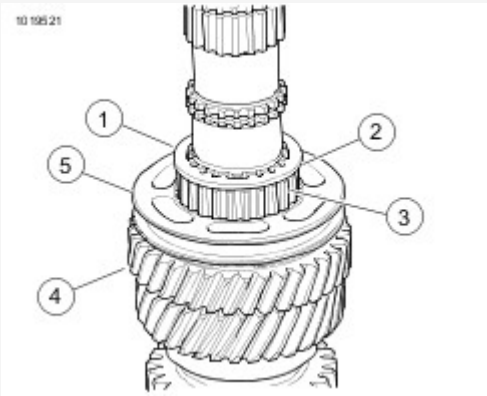

View interactive image

1	Lock ring
2	Securing segment (2) (not visible)
3	Guiding hub

4	Countershaft fourth gear
5	Dog ring

Figure 9. Countershaft Fourth Gear

Remove Bearing Housing Bearings

NOTE

Always replace bearing housing bearing if the shaft is pressed out.

1. See Figure 10. Remove the retaining rings (2). Discard retaining rings.
2. Press the bearings out of the bearing housing.

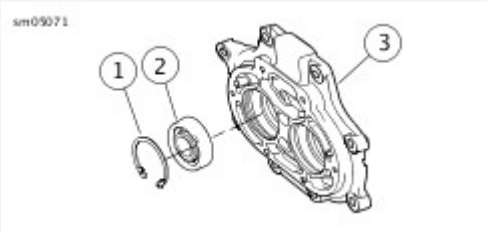

View interactive image

1	Retaining ring (2)
2	Bearing (2)
3	Bearing housing

Figure 10. Bearing Housing Bearings

WARNING

Compressed air can pierce the skin and flying debris from compressed air could cause serious eye injury. Wear safety glasses when working with compressed air. Never use your hand to check for air leaks or to determine air flow rates. (00061a)

1. Clean parts in a non-volatile cleaning solution. Dry parts with low-pressure, compressed air.
2. Replace gears that are worn or damaged.
3. Replace the dog rings if dogs and/or pockets are rounded, battered or chipped.
4. Replace guiding hubs if splines are rounded, battered or chipped.
5. Replace shift fork shafts if bent or damaged.
6. Replace a shift fork if it is excessively worn or shows signs of overheating.
7. See Figure 1. Using a small square, verify that the shift forks are square. Replace shift fork if not square.
8. Replace shift drum assembly if drum or bearing are damaged.
9. Clean shift cam lock plate mounting holes in transmission bearing housing.

View interactive image

Figure 1. Checking Fork

Install Bearing Housing Bearings

NOTE

- Always replace bearing housing bearing if the shaft was removed.
- Always support the bearing housing with a plate when pressing bearings.
- Press on the bearing outer race.

1. Install bearings.
   a. Support the bearing housing at the bearing bores with a flat plate.
   b. Position **new** bearing over bore with number side up.
   c. Press the bearing until seated in the bore.

WARNING

Wear safety glasses or goggles when removing or installing retaining rings. Retaining rings can slip from the pliers and could be propelled with enough force to cause serious eye injury. (00312a)

2. See Drive and Transmission → TRANSMISSION → Disassemble → Bearing Housing Bearings. Install **new** beveled retaining ring (1) with the flat side against the bearing.

Install Countershaft

1. Install fourth, third and second gears on countershaft.
   a. See Drive and Transmission → TRANSMISSION → Disassemble → Countershaft Fourth Gear. Install countershaft fourth gear (4).
   b. Lubricate needle bearings and races with SCREAMIN' EAGLE ASSEMBLY LUBE.
   c. Install **new** needle bearing.
   d. Install guiding hub (3).
   e. Install dog ring (5).
   f. Install securing segments (2) with the rounded edge facing up. Verify that segments fully engage grooves in countershaft.
   g. Install lock ring (1) with waved, stepped face toward the securing segments.
   h. See Drive and Transmission → TRANSMISSION → Disassemble → Countershaft Third Gear. Install countershaft third gear (4).

NOTE

Install the second gear guiding hub with the deeper counterbore facing countershaft second gear.

   i. See Drive and Transmission → TRANSMISSION → Disassemble → Countershaft Second Gear. Install countershaft second gear (4).
2. See Figure 1. Preload scissor first gear.
   a. While holding thick gear, rotate thin gear until holes align.

b. Install HD-52235 (SCISSOR FIRST GEAR TOOL).

3. See Drive and Transmission → TRANSMISSION → Disassemble → Countershaft First Gear. Install **new** needle bearing, countershaft first gear (2) and washer (1).

NOTE

- If installing countershaft with mainshaft installed, raise and hold countershaft third and fourth gear shift dog up while pressing bearing housing bearing on to countershaft.
- Failure to press on bearing inner race damages the bearing.

4. See Figure 3. If mainshaft is not removed, raise and hold countershaft third and fourth gear shift dog while installing countershaft.
5. See Figure 2. Install countershaft to bearing housing.
   a. Support countershaft sixth gear in press.
   b. Using a suitable sleeve, press on bearing inner race until bearing contacts countershaft first gear washer.

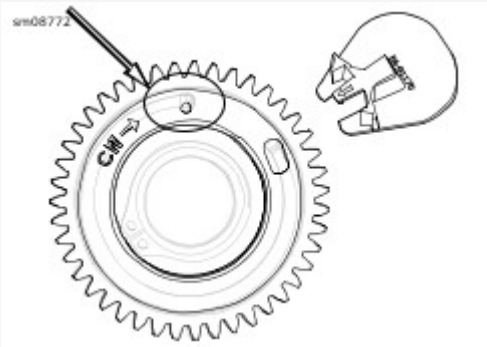

View interactive image

Figure 1. Preload Scissor First Gear

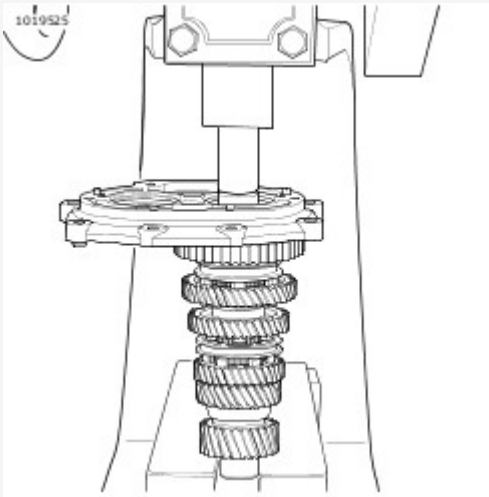

View interactive image

Figure 2. Installing Countershaft

Install Mainshaft

NOTE

Failure to press on bearing inner race damages the bearing.

1. Support mainshaft fourth gear in press.
2. See Figure 3. Raise and hold dog ring engaged with countershaft third gear during the press procedure.
3. Using a suitable sleeve, press on bearing inner race until bearing contacts mainshaft first gear.
4. See Drive and Transmission → TRANSMISSION → Disassemble → Mainshaft Fifth Gear. With bearing housing on end (shafts pointing up), install **new** bearing and mainshaft fifth gear (4).
5. With guiding hub counterbore facing mainshaft fifth gear, install guiding hub (2) and dog ring (3).
6. Install **new** retaining ring using 714 (OTC HORSESHOE LOCK RING PLIERS,) (1).
7. Remove holding tool from scissor first gear.
8. Install **new** mainshaft and countershaft locknuts.
   a. Using dog rings, lock two gears in place.
   b. Temporarily install transmission assembly in transmission case.
   c. Install locknuts. Tighten to 115.3–128.8 N·m (85–95 ft-lbs).
   d. Remove transmission assembly from transmission case.

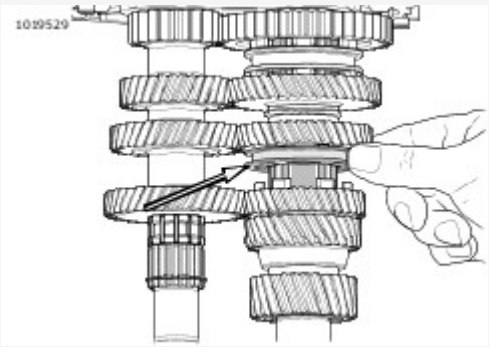

View interactive image

Figure 3. Raise and Hold Dog Ring

Install Shifter Cam/Shifter Forks

1. Set bearing housing on bench with shafts pointing up.
2. Install detent arm assembly, if removed.
   a. See Figure 4. Clean detent screw mounting hole in transmission bearing housing.
   b. Assemble **new** detent screw (1), detent arm (2), sleeve (3) and detent spring (4).
   c. Align spring and detent arm as shown.
   d. Install detent assembly in bearing housing with screw (1).

e. Tighten.
Torque: 13.6–17 N·m (120–150 **in-lbs**) *Shift drum detent screw*
Torque: 13.6–17 N·m (120–150 **in-lbs**) *Shift drum detent screw*

3. See **Figure 5**. Hold detent arm back and install shift cam assembly (4).
4. Install lock plate (2) and **new** lock plate screws (3). Tighten..
Torque: 6.4–7.1 N·m (57–63 **in-lbs**) *Shift drum lock plate screws*
Torque: 6.4–7.1 N·m (57–63 **in-lbs**) *Shift drum lock plate screws*
5. Remove any burrs created on shift shafts (1, 3) during removal.

NOTE

See **Figure 6**. The shifter forks are unique and identified as shown.

6. See **Figure 7**. Install long shift shaft (1):
   a. Insert shifter fork (2) into the dog ring between mainshaft fifth and sixth gear.
   b. Slide shift shaft through shifter fork.
   c. Install shaft in hole in bearing housing.
7. Install short shift shaft (4):
   a. Insert shifter fork (6) into the dog ring between countershaft third and fourth gear.
   b. Insert shifter fork (9) into the dog ring between countershaft first and second gear.
   c. Slide shift shaft through shifter forks.
   d. Install shaft in bearing housing.

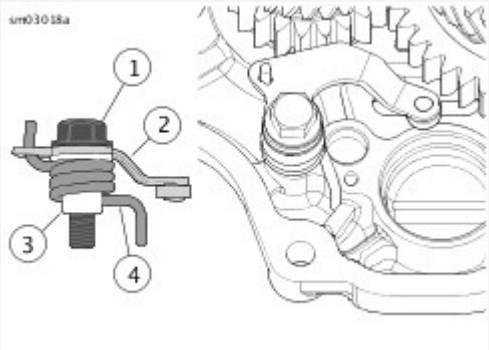

View interactive image

1	Detent screw
2	Detent arm
3	Sleeve
4	Detent spring

Figure 4. Detent Assembly

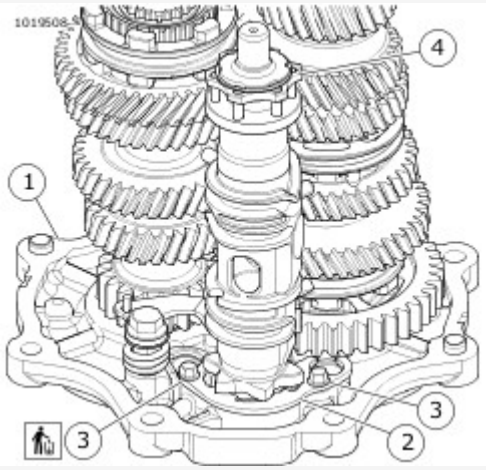

View interactive image

1	Bearing housing
2	Lock plate
3	Lock plate screw (2)
4	Shift cam

Figure 5. Shift Drum

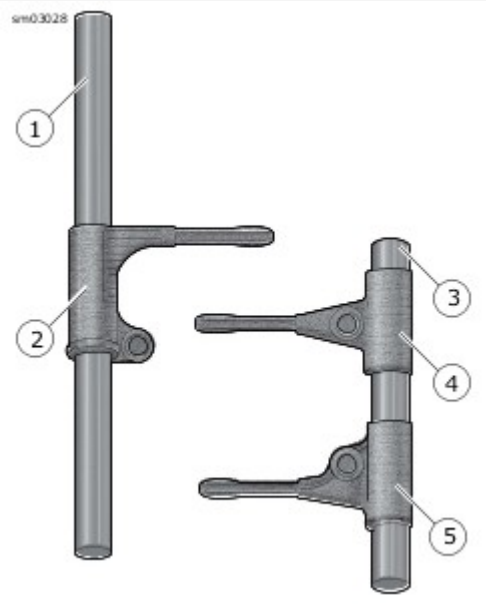

View interactive image

1	Long shift shaft
2	Fifth and sixth gear shifter fork

3	Short shift shaft
4	Third and fourth gear shifter fork
5	First and second gear shifter fork

Figure 6. Shifter Forks and Shafts

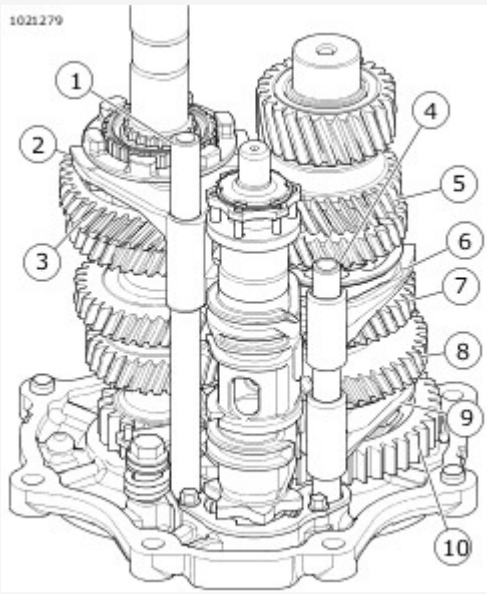

View interactive image

1	Long shift shaft
2	Fifth and sixth gear shifter fork
3	Mainshaft fifth gear
4	Short shift shaft
5	Countershaft fifth gear
6	Third and fourth gear shifter fork
7	Third gear
8	Second gear
9	First and second gear shifter fork
10	First gear

Figure 7. Transmission Gears and Shifter Forks

1. Install transmission mainshaft bearing inner race. See **Drive and Transmission → PRIMARY CHAINCASE HOUSING → Mainshaft Bearing Inner Race**.
2. Install clutch release cover. See **Drive and Transmission → CLUTCH RELEASE COVER**.
3. Fill transmission oil. See **Maintenance → REPLACE TRANSMISSION LUBRICANT**.
4. Install engine oil fill spout. See **Drive and Transmission → ENGINE OIL FILL SPOUT**.
5. Fill engine oil. See **Maintenance → REPLACE ENGINE OIL AND FILTER**.
6. Install exhaust system. See **Fuel and Exhaust → EXHAUST SYSTEM**.
7. Install primary chaincase housing. See **Drive and Transmission → PRIMARY CHAINCASE HOUSING**.
8. Install the primary chain, clutch, compensating sprocket and chain tensioner. See **Drive and Transmission → DRIVE COMPONENTS**.
9. Install starter. See **Electrical → STARTER**.
10. Install primary chaincase cover. See **Drive and Transmission → PRIMARY CHAINCASE COVER**.
11. Fill primary chaincase oil. See **Maintenance → REPLACE PRIMARY CHAINCASE LUBRICANT**.
12. **Mid-mount controls:** Install foot shift lever. See **Drive and Transmission → SHIFTER LINKAGE**.
13. Install rider left footboard and bracket, if removed. See **Chassis → LEFT FOOT CONTROLS**.
14. Adjust drive belt deflection. See **Maintenance → INSPECT AND ADJUST DRIVE BELT AND SPROCKETS**.
15. Verify rear fork pivot shaft torque. See **Chassis → REAR FORK**.
16. Connect negative battery cable. See **Electrical → POWER DISCONNECT**.

WARNING

To prevent accidental vehicle start-up, which could cause death or serious injury, disconnect negative (-) battery cable before proceeding. (00048a)

1. Disconnect negative battery cable. See **Electrical → POWER DISCONNECT**.
2. Remove rider footboard and bracket, if needed. See **Chassis → LEFT FOOT CONTROLS**.
3. **Mid-mount controls:** Remove foot shift lever. See **Drive and Transmission → SHIFTER LINKAGE**.
4. Drain primary chaincase oil. See **Maintenance → REPLACE PRIMARY CHAINCASE LUBRICANT**.
5. Remove primary chaincase cover. See **Drive and Transmission → PRIMARY CHAINCASE COVER**.
6. Remove starter. See **Electrical → STARTER**.
7. Remove primary chain, clutch and compensating sprocket. See **Drive and Transmission → DRIVE COMPONENTS**.
8. Remove primary chaincase housing. See **Drive and Transmission → PRIMARY CHAINCASE HOUSING**.
9. Remove bearing inner race from transmission mainshaft. See **Drive and Transmission → PRIMARY CHAINCASE HOUSING → Mainshaft Bearing Inner Race**.
10. Remove transmission sprocket. See **Drive and Transmission → TRANSMISSION SPROCKET**.
11. Remove transmission bearing housing and gear assembly. See **Drive and Transmission → TRANSMISSION**.

Special Tools

Description	Part Number	Qty.
MAIN DRIVE GEAR REMOVER AND INSTALLER SET	HD-35316-D	1

NOTICE

Failure to use Main Drive Gear Remover and Installer can cause premature failure of bearing and related parts. (00540b)

NOTE

Main drive gear and bearing can be removed with the transmission case in the frame after removing bearing housing.

1. See Figure 1. Remove gear using MAIN DRIVE GEAR REMOVER AND INSTALLER SET (Part Number:HD-35316-D).
2. Remove tool.
3. Remove large main drive gear oil seal.
4. Remove retaining ring from bearing bore.
5. See Figure 2. Remove main drive gear bearing from transmission case using MAIN DRIVE GEAR REMOVER AND INSTALLER SET (Part Number:HD-35316-D).
6. Discard main drive gear bearing.

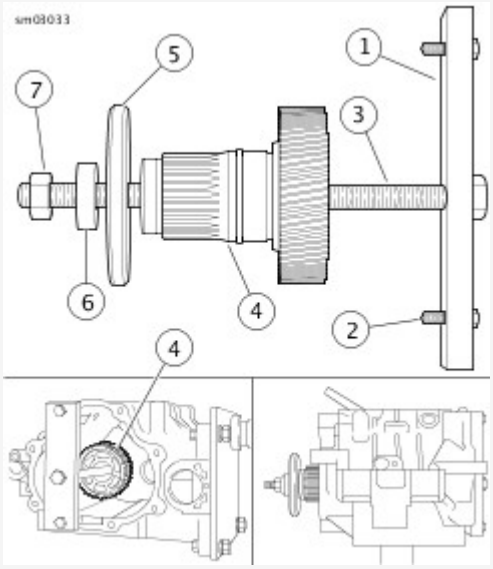

View interactive image

1	Cross plate
2	Screw (2)
3	12-in bolt
4	Main drive gear
5	Washer

6	Bearing
7	Nut

Figure 1. Removing Main Drive Gear

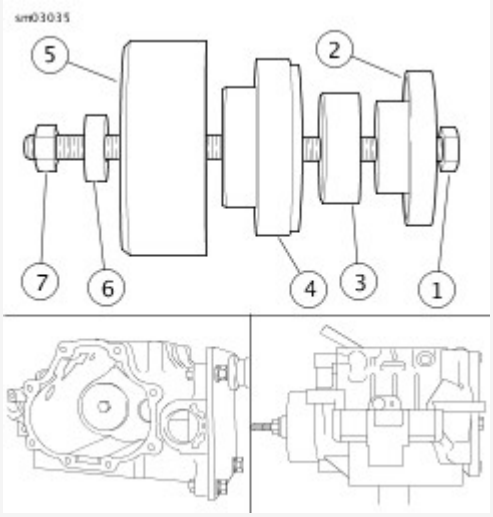

View interactive image

1	8-in bolt
2	Bearing driver
3	Pilot
4	Main drive gear bearing
5	Receiver cup
6	Bearing
7	Nut

Figure 2. Removing Main Drive Gear Bearing

NOTE

Never wash the transmission case and needle bearings with solvent unless replacing the needle bearings. Normal cleaning methods wash dirt or other contaminants into the bearing case (behind the needles) and leads to bearing failure.

1. Clean all parts in solvent except the transmission case and needle bearings. Dry parts with low-pressure, compressed air.
2. Inspect the main drive gear for pitting and wear.
3. Inspect the needle bearings inside the main drive gear.
4. Inspect mainshaft race. Replace the needle bearings if the mainshaft race is damaged.

Special Tools

Description	Part Number	Qty.
MAIN DRIVE GEAR REMOVER AND INSTALLER SET	HD-35316-D	1
MAIN DRIVE GEAR SEAL INSTALLER KIT	HD-47856	1

NOTICE

Improper tightening of sprocket nut can cause drive component damage. (00541b)

1. See Figure 1. Install main drive gear bearing using MAIN DRIVE GEAR REMOVER AND INSTALLER SET (Part Number:HD-35316-D).

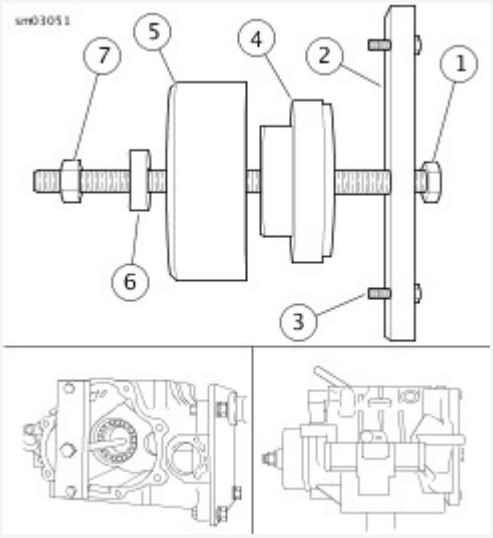

View interactive image

1	12-in bolt
2	Cross plate
3	Screw (2)
4	Main drive gear bearing
5	Bearing driver
6	Bearing
7	Nut

Figure 1. Installing Main Drive Gear Bearing (Typical)

2. See Figure 2. Install **new** O-ring (4) onto main drive gear (3). Lubricate O-ring with clean engine oil.
3. Install main drive gear using MAIN DRIVE GEAR REMOVER AND INSTALLER SET (Part Number:HD-35316-D).

NOTE

See Figure 3. Install retaining ring with the flat side facing the bearing and the opening within the range shown.

4. Install **new** retaining ring.

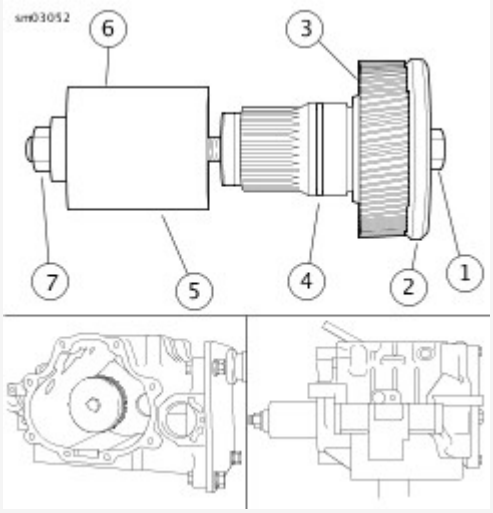

View interactive image

1	8-in bolt
2	Washer
3	Main drive gear
4	O-ring
5	Installer cup
6	Bearing
7	Nut

Figure 2. Installing Main Drive Gear (Typical)

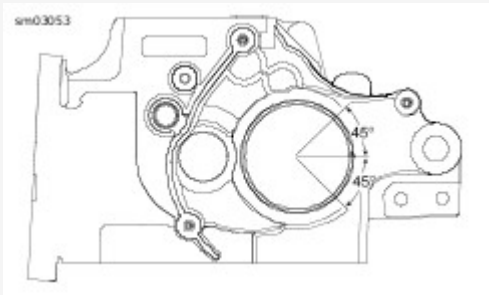

View interactive image

Figure 3. Retaining Ring Opening

5. See Figure 4. Install **new** main drive gear large seal using MAIN DRIVE GEAR SEAL INSTALLER KIT (Part Number:HD-47856).

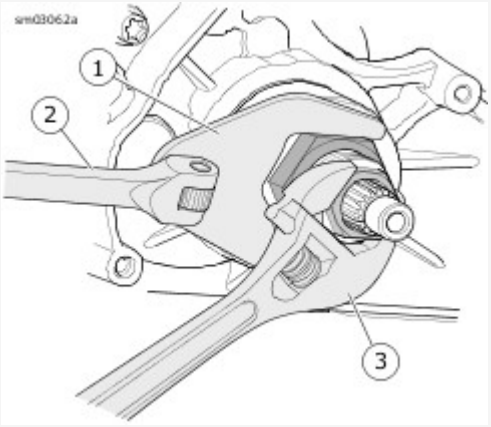

View interactive image

1	Crow's foot wrench
2	Breaker bar
3	Adjustable wrench

Figure 4. Press Seal into Crankcase

Special Tools

Description	Part Number	Qty.
MAIN DRIVE GEAR BEARING AND SEAL INSTALLATION TOOL	HD-47932	1

NOTE

See Figure 2. When replacing needle bearings, replace retaining rings (1) with **new** retaining rings (2).

1. See Figure 1. Remove mainshaft seal (7).
2. Remove retaining rings (1), needle bearings (2, 6) and spacer (5) from main drive gear (3). Discard retaining rings.
3. Discard O-ring (4).

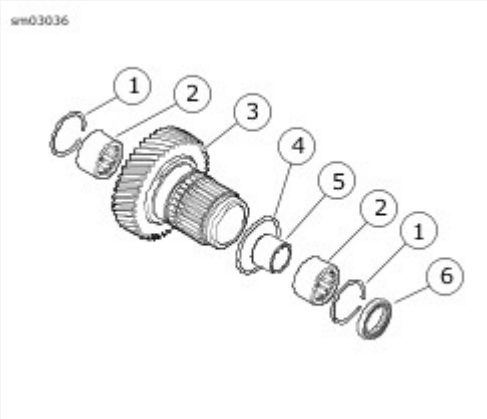

View interactive image

1	Retaining ring (2)
2	Inner needle bearing
3	Main drive gear
4	O-ring
5	Spacer
6	Outer needle bearing
7	Mainshaft seal

Figure 1. Main Drive Gear Assembly

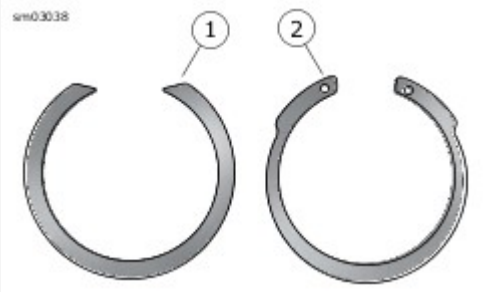

View interactive image

1	Original retaining ring
2	Replacement retaining ring

Figure 2. Main Drive Gear Retaining Rings

4. See Figure 3. Use MAIN DRIVE GEAR BEARING AND SEAL INSTALLATION TOOL (Part Number:HD-47932) to install outer needle bearing. Press until tool contacts gear.

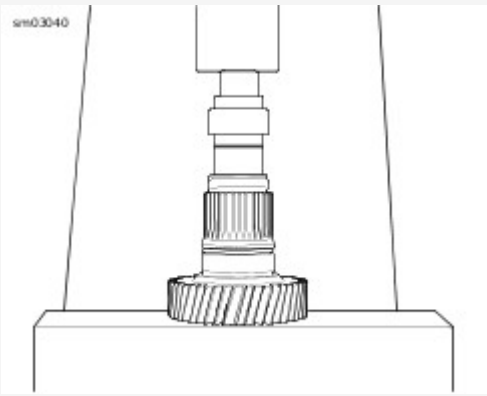

View interactive image

Figure 3. Installing Outer Needle Bearing in Main Drive Gear

NOTE

The mainshaft seal can also be installed after the main drive gear is installed. See Drive and Transmission → MAIN DRIVE GEAR AND BEARING → Replace Mainshaft Seal.

5. See Figure 4. Install mainshaft seal with garter spring side down.
   a. Use the 0.090-in step of MAIN DRIVE GEAR BEARING AND SEAL INSTALLATION TOOL (Part Number:HD-47932).
   b. Press until tool contacts gear.
6. See Figure 1. Turn over the main drive gear. Install spacer (5).
7. See Figure 5. Use MAIN DRIVE GEAR BEARING AND SEAL INSTALLATION TOOL (Part Number:HD-47932) to press inner needle bearing until tool contacts gear.
8. See Figure 1. Install **new** retaining rings (1).
9. Install **new** O-ring (4).

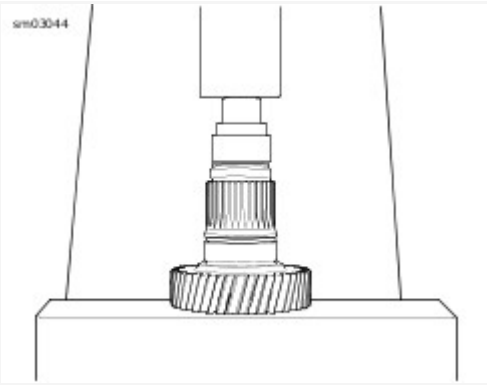

View interactive image

Figure 4. Pressing in Seal

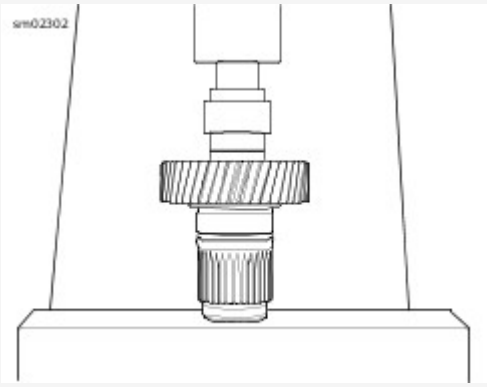

View interactive image

Figure 5. Installing Inner Needle Bearing in Main Drive Gear

Special Tools

Description	Part Number	Qty.
MAIN DRIVE GEAR SEAL INSTALLER	HD-47933	1

See Figure 1. Use the MAIN DRIVE GEAR SEAL INSTALLER (Part Number:HD-47933) to replace the mainshaft seal while the main drive gear is installed.

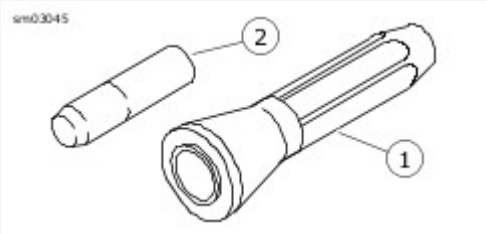

View interactive image

1	Driver
2	Seal protector sleeve

Figure 1. Main Drive Gear Seal Installer

1. Remove the seal using a seal remover or rolling head pry bar.
2. Verify that bore is clean and smooth.
3. See Figure 2. Place the seal protector sleeve (1) of MAIN DRIVE GEAR SEAL INSTALLER (Part Number:HD-47933) over the end of the mainshaft.
4. Lightly lubricate the protector sleeve and seal ID with clean transmission oil.
5. Slide the seal (2) on the seal protector sleeve with the garter spring facing the bearing.
6. See Figure 3. Hand press seal onto place until seal driver contacts end of main drive gear using MAIN DRIVE GEAR SEAL INSTALLER (Part Number:HD-47933). Lightly tap with a rubber mallet if necessary.

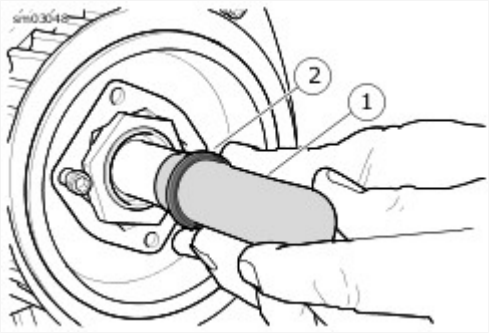

View interactive image

1	Seal protector sleeve
2	Seal

Figure 2. Seal Protector Sleeve

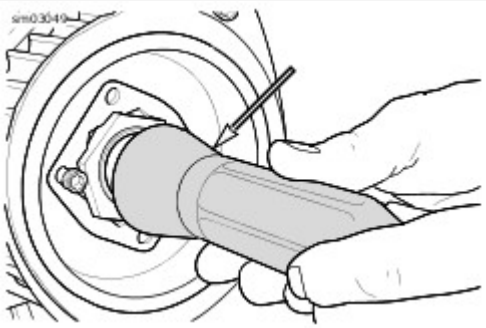

View interactive image

Figure 3. Seal Driver

1. Install bearing housing and gear assembly. See **Drive and Transmission → TRANSMISSION**.
2. Install transmission sprocket. See **Drive and Transmission → TRANSMISSION SPROCKET**.
3. Install bearing inner race to transmission mainshaft. See **Drive and Transmission → PRIMARY CHAINCASE HOUSING → Mainshaft Bearing Inner Race**.
4. Install primary chaincase housing. See **Drive and Transmission → PRIMARY CHAINCASE HOUSING**.
5. Install the primary chain, clutch, compensating sprocket and chain tensioner. See **Drive and Transmission → DRIVE COMPONENTS**.
6. Install starter. See **Electrical → STARTER**.
7. Install primary chaincase cover and **new** gasket. See **Drive and Transmission → PRIMARY CHAINCASE COVER**.
8. Fill primary chaincase oil. See **Maintenance → REPLACE PRIMARY CHAINCASE LUBRICANT**.
9. **Mid-mount controls:** Install foot shift lever. See **Drive and Transmission → SHIFTER LINKAGE**.
10. Install rider left footboard and bracket, if removed. See **Chassis → LEFT FOOT CONTROLS**.
11. Adjust drive belt deflection. See **Maintenance → INSPECT AND ADJUST DRIVE BELT AND SPROCKETS**.
12. Verify rear fork pivot shaft torque. See **Chassis → REAR FORK**.
13. Connect negative battery cable. See **Electrical → POWER DISCONNECT**.

WARNING

Disconnect negative (-) battery cable first. If positive (+) cable should contact ground with negative (-) cable connected, the resulting sparks can cause a battery explosion, which could result in death or serious injury. (00049a)

1. Remove battery. See Maintenance → INSPECT BATTERY.
2. Remove battery tray. See Electrical → BATTERY TRAY.
3. Drain engine oil. See Maintenance → REPLACE ENGINE OIL AND FILTER.
4. Drain transmission oil. See Maintenance → REPLACE TRANSMISSION LUBRICANT.
5. Drain primary chaincase oil. See Maintenance → REPLACE PRIMARY CHAINCASE LUBRICANT.
6. See Drive and Transmission → TRANSMISSION CASE → Remove → Oil Return Line. Disconnect oil return line (1).
7. Remove exhaust system. See Fuel and Exhaust → EXHAUST SYSTEM.
8. Remove clutch release cover. See Drive and Transmission → CLUTCH RELEASE COVER.
9. Remove screw securing jiffy stand sensor, if equipped. See Electrical → JIFFY STAND SENSOR (JSS).
10. Remove rider footboard and bracket, if needed. See Chassis → LEFT FOOT CONTROLS.
11. **Mid-mount controls:** Remove foot shift lever. See Drive and Transmission → SHIFTER LINKAGE.
12. Remove primary chaincase cover. See Drive and Transmission → PRIMARY CHAINCASE COVER.
13. Remove starter. See Electrical → STARTER.
14. Remove primary chain, clutch and compensating sprocket. See Drive and Transmission → DRIVE COMPONENTS.
15. Remove primary chaincase housing. See Drive and Transmission → PRIMARY CHAINCASE HOUSING.
16. Loosen drive belt. See Maintenance → INSPECT AND ADJUST DRIVE BELT AND SPROCKETS.
17. Remove transmission assembly. See Drive and Transmission → TRANSMISSION.
18. Remove oil pan. See Engine → OIL PAN.

NOTICE

When lifting a motorcycle using a jack, be sure jack contacts both lower frame tubes where down tubes and lower frame tubes converge. Never lift by jacking on cross-members, oil pan, mounting brackets, components or housings. Failure to comply can cause serious damage resulting in the need to perform major repair work. (00586d)

19. Position jack across lower frame to support rear of motorcycle.

Slide wooden blocks beneath the crankcase to support the weight of the engine and transmission assembly.

20. Remove rear fork. See **Chassis → REAR FORK**.
21. Disconnect vehicle speed sensor (VSS). See **Electrical → VEHICLE SPEED SENSOR (VSS)**.
22. Disconnect neutral switch. See **Electrical → NEUTRAL INDICATOR SWITCH**.

1. Remove battery negative cable from ground post at top of transmission case.
2. Move aside the harness that terminates at the O2 sensor, starter solenoid, neutral switch and VSS.
3. Remove transmission shift lever.
    a. Mark splines on transmission shift lever and shift shaft to help with assembly.
    b. Remove pinch screw.
    c. Pull lever from shaft.
4. In a cross-wise pattern, remove four bolts securing transmission to engine.

NOTE

See Figure 2. Do not use a hammer to remove transmission. If the transmission sticks or binds on the ring dowels, gently pry away from crankcase using the pry point.

5. Move transmission rearward until two ring dowels in lower flange are free of crankcase.
6. Remove transmission case from rear of the motorcycle.

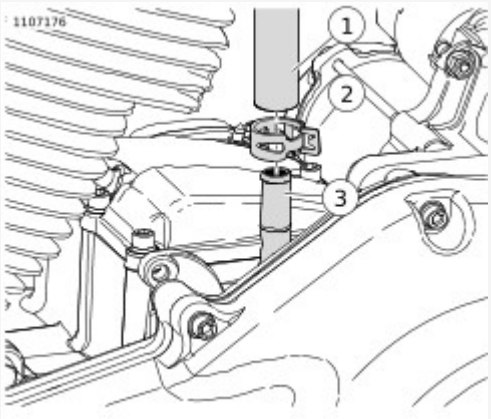

View interactive image

1	Oil return line
2	Clamp
3	Oil return tube

Figure 1. Oil Return Line

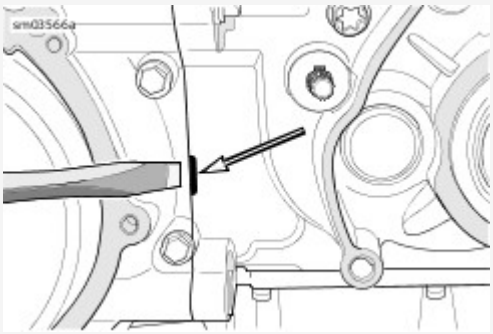

View interactive image

Figure 2. Transmission Case Pry Point

1. Install **new** ground post at top of transmission case. Tighten ground post until snug.

> **NOTE**
>
> A **new** transmission case has the shifter shaft sleeve and seal, centering screw, countershaft needle bearing and main drive gear bearing and seal installed.

2. Wipe all engine oil from pockets in crankcase flange.
3. Install **new** engine-to-transmission gasket.
4. Verify that transmission dowels are seated. Place transmission case into position.
5. Secure transmission.
   a. Install shorter bolts at the top, longer bolts at the bottom. Hand-tighten bolts.
   b. See **Figure 1**. Tighten bolts in the sequence shown to. Torque: 20.3 N·m (15 ft-lbs) *Transmission mounting bolts, 1st torque*
   c. Tighten to the final torque in the same sequence. Torque: 46.1–52.9 N·m (34–39 ft-lbs) *Transmission mounting bolts, final torque*
6. Secure battery ground cable to ground post at top of transmission case. Tighten to.
   Torque: 7.5–12.9 N·m (66–114 **in-lbs**) *Battery ground cable to transmission*

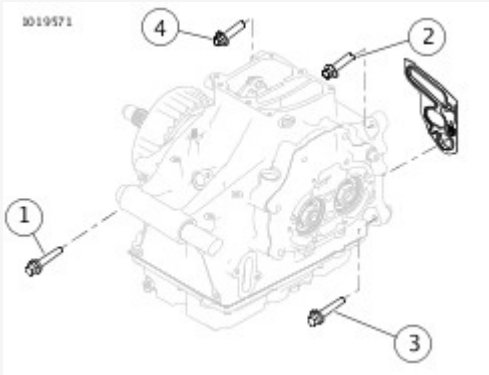

View interactive image

Figure 1. Transmission Housing to Crankcase Tightening Sequence

Remove Shifter Pawl Lever

1. See Drive and Transmission → TRANSMISSION CASE → Clean and Inspect → Shifter Arm and Pawl Assembly (Typical). Remove shifter rod lever.
    a. Remove pinch screw (8).
    b. Remove shifter rod lever (9) from the shifter pawl lever assembly (1).
2. Remove shifter pawl assembly.
    a. Remove retaining ring (7), washer (6) and seal (5).
    b. Discard retaining ring and seal.
    c. Remove shifter pawl lever assembly.
3. Inspect sleeve (2) in transmission case.

Remove Oil Return Tube

1. If transmission case is installed in vehicle:
    a. Disconnect battery.
    b. See Drive and Transmission → TRANSMISSION CASE → Remove → Oil Return Line. Disconnect oil return hose (1) from return tube (3).
2. See Figure 1.. Remove screws (2, 4).
3. Remove oil return tube (1).

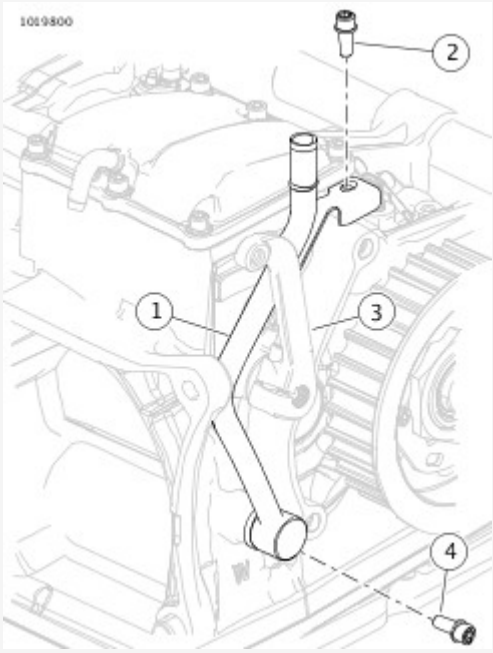

View interactive image

1	Oil return tube
2	Screw
3	Shift lever
4	Screw

Figure 1. Oil Return Tube/Cover

WARNING

Compressed air can pierce the skin and flying debris from compressed air could cause serious eye injury. Wear safety glasses when working with compressed air. Never use your hand to check for air leaks or to determine air flow rates. (00061a)

NOTE

Never wash the transmission case and needle bearings with solvent. Normal cleaning methods wash dirt or other contaminants into the bearing case (behind the needles) leading to bearing failure.

1. Clean all parts in solvent except the case and main drive gear needle bearings. Dry parts with low-pressure, compressed air.
2. See Figure 1. Inspect the shifter pawl lever assembly (1) for wear. Replace assembly if pawl ends are damaged. Replace centering spring (3) if elongated.
3. Inspect the shifter shaft lever spring (4). Replace if the spring fails to hold the pawl on the cam pins.
4. Thoroughly clean the oil pan.
5. Inspect transmission top cover vent hose for damage. Verify that hose and fitting are unobstructed.

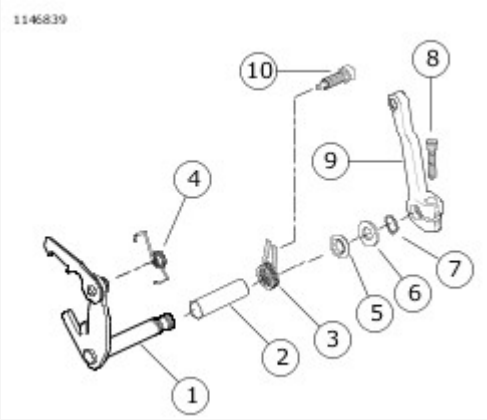

View interactive image

1	Shifter pawl lever assembly
2	Sleeve (inside transmission case)
3	Shift lever centering spring
4	Shifter shaft lever spring
5	Seal
6	Washer
7	Retaining ring
8	Screw
9	Shifter rod lever
10	Screw

Figure 1. Shifter Arm and Pawl Assembly (Typical)

Special Tools

Description	Part Number	Qty.
SHIFTER SHAFT SEAL INSTALLATION TOOL	HD-51337	1

Install Oil Return Tube

1. See Drive and Transmission → TRANSMISSION CASE → Disassemble → Oil Return Tube/Cover. Install **new** O-ring on lower oil tube adapter.
2. Install oil return tube (1).
   a. Locate oil return tube between shift lever (3) and transmission housing.
3. Install screws (2, 4).
   a. Tighten.
   Torque: 11.3–13.6 N·m (100–120 **in-lbs**) *Oil return tube screw*
4. If transmission case is installed in vehicle:
   a. See Drive and Transmission → TRANSMISSION CASE → Remove → Oil Return Line. Connect oil return hose (1) to return tube (3). Secure with clamp (2).
   b. Connect battery.
5. Check engine oil level after running engine.

Replace Countershaft Needle Bearing

1. Press or drive out bearing using a bearing driver 31.75 mm (1.25 in) in diameter.
2. Install **new** bearing.
   a. From the outside of the transmission case, place the bearing on the bearing bore.
   b. Install the bearing flush or to a maximum depth of 0.76 mm (0.030 in) with the outside surface of the case.
3. Lubricate the bearing with SCREAMIN' EAGLE ASSEMBLY LUBE.

Install Shifter Pawl Lever

1. See Drive and Transmission → TRANSMISSION CASE → Clean and Inspect → Shifter Arm and Pawl Assembly (Typical). Verify that sleeve (3) is in transmission case bore.
2. Install screw (10) into side of transmission case. Tighten.
   Torque: 24.4–31.2 N·m (18–23 ft-lbs) *Shifter pawl centering screw*
3. See Figure 1. Assemble shifter arm.
   a. Slide shifter lever centering spring (2) over shaft of shifter pawl lever assembly (3).
   b. Align opening on spring with tab on lever.
   c. Place shifter shaft lever spring (4) on shifter pawl lever

assembly. Flex spring only enough to assemble.

4. See Figure 2. Insert the shifter arm assembly into the transmission case.
5. See Figure 3. Verify that pin of screw sits inside shifter shaft lever spring.
6. Install **new** seal with garter spring facing the transmission.
   a. Drive the seal until the tool bottoms on the transmission case.

      Special Tool: SHIFTER SHAFT SEAL INSTALLATION TOOL (HD-51337)

7. See Figure 2. Install washer (1) and **new** retaining ring (2).

NOTE
Install shifter rod lever one spline from vertical toward front of vehicle.

8. See Drive and Transmission → TRANSMISSION CASE → Clean and Inspect → Shifter Arm and Pawl Assembly (Typical). Install shifter rod lever (9).
   a. Install pinch screw (8).
   b. Tighten to 24.4–29.8 N·m (18–22 ft-lbs).

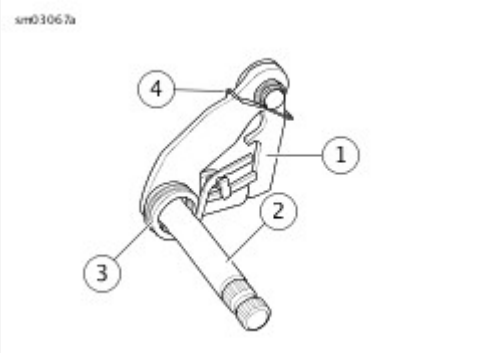

View interactive image

1	Pawl (part of shifter pawl lever assembly)
2	Shifter pawl lever assembly
3	Shifter lever centering spring
4	Shifter shaft lever spring

Figure 1. Shifter Pawl Lever Assembly

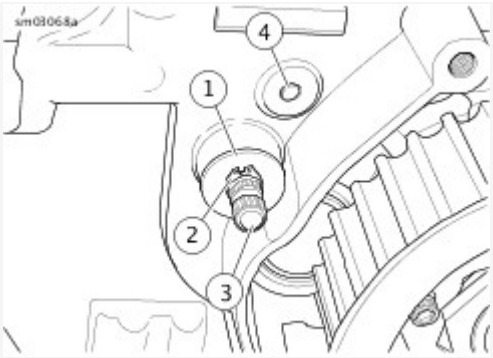

View interactive image

1	Washer (with seal behind)
2	Retaining ring
3	Shifter shaft lever
4	Pin

Figure 2. Shifter Shaft Lever, Exterior View

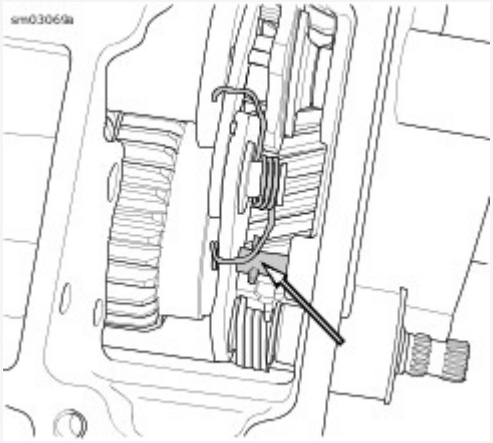

View interactive image

Figure 3. Shifter Shaft Lever Spring

1. Install neutral switch. See Electrical → NEUTRAL INDICATOR SWITCH.
2. Install VSS. See Electrical → VEHICLE SPEED SENSOR (VSS).
3. Install rear fork. See Chassis → REAR FORK.
4. Install oil pan. See Engine → OIL PAN.
5. Install transmission. See Drive and Transmission → TRANSMISSION.
6. Install primary chaincase housing. See Drive and Transmission → PRIMARY CHAINCASE HOUSING.
7. Install primary chain, clutch and compensating sprocket. See Drive and Transmission → DRIVE COMPONENTS.
8. See Drive and Transmission → TRANSMISSION CASE → Remove → Oil Return Line. Connect oil return line (1).
9. Install starter. See Electrical → STARTER.
10. Install primary chaincase cover and **new** gasket. See Drive and Transmission → PRIMARY CHAINCASE COVER.
11. **Mid-mount controls:** Install foot shift lever. See Drive and Transmission → SHIFTER LINKAGE.
12. Install rider footboard and bracket, if removed. See Chassis → LEFT FOOT CONTROLS.
13. Install transmission shift linkage. See Drive and Transmission → SHIFTER LINKAGE.
14. Install jiffy stand sensor, if removed. See Electrical → JIFFY STAND SENSOR (JSS).
15. Install clutch release cover. See Drive and Transmission → CLUTCH RELEASE COVER.
16. Install exhaust system. See Fuel and Exhaust → EXHAUST SYSTEM.
17. Fill primary chaincase. See Maintenance → REPLACE PRIMARY CHAINCASE LUBRICANT.
18. Fill transmission. See Maintenance → REPLACE TRANSMISSION LUBRICANT.
19. Fill engine oil. See Maintenance → REPLACE ENGINE OIL AND FILTER.
20. Adjust drive belt deflection. See Maintenance → INSPECT AND ADJUST DRIVE BELT AND SPROCKETS.
21. Install battery tray. See Electrical → BATTERY TRAY.
22. Install battery. See Maintenance → INSPECT BATTERY.

FASTENER	TORQUE VALUE	NOTES
Air filter element screws	5.4–8.1 N·m (48–72 **in-lbs**)	6.3 AIR CLEANER BACKPLATE ASSEMBLY, Remove and Install: Round
Backplate screw, square filter	4.1–6.8 N·m (36–60 **in-lbs**)	6.3 AIR CLEANER BACKPLATE ASSEMBLY, Remove and Install: Square
Backplate screws	5.6–6.8 N·m (50–60 **in-lbs**)	6.3 AIR CLEANER BACKPLATE ASSEMBLY, Remove and Install: Oval
Breather bolt, square filter	29.8–32.5 N·m (22–24 ft-lbs)	6.3 AIR CLEANER BACKPLATE ASSEMBLY, Remove and Install: Square
Breather bolts	29.8–32.5 N·m (22–24 ft-lbs)	6.3 AIR CLEANER BACKPLATE ASSEMBLY, Remove and Install: Round
Breather bolts	29.8–32.5 N·m (22–24 ft-lbs)	6.3 AIR CLEANER BACKPLATE ASSEMBLY, Remove and Install: Oval *metric*
Charcoal canister bracket to engine case screws	8.1–10.8 N·m (72–96 **in-lbs**)	6.23 CHARCOAL CANISTER: CALIFORNIA EMISSIONS, Install
Charcoal canister to bracket screws	3.4–4.1 N·m (30–36 **in-lbs**)	6.23 CHARCOAL CANISTER: CALIFORNIA EMISSIONS, Install
Console screw (Front)	3.4–5.6 N·m (30–50 **in-lbs**)	6.4 CONSOLE, Remove and Install: Single Instrument with Panel
Console screw (Rear)	2.8–3.4 N·m (25–30 **in-lbs**)	6.4 CONSOLE, Remove and Install: Dual Instrument
Console screw (Rear)	2.8–3.4 N·m (25–30 **in-lbs**)	6.4 CONSOLE, Remove and Install: Single Instrument with Panel
Console screws	4.5–5.6 N·m (40–50 **in-lbs**)	6.4 CONSOLE, Remove and Install: Single Instrument without Panel
Console screws (Front)	3.4–5.6 N·m (30–50 **in-lbs**)	6.4 CONSOLE, Remove and Install: Dual Instrument
Exhaust bracket screws	54.2–67.8 N·m (40–50 ft-lbs)	6.21 EXHAUST SYSTEM, Install
Exhaust shield clamps	2.3–4.5 N·m (20–40 **in-lbs**)	6.21 EXHAUST SYSTEM, Disassemble and Assemble: Standard
Exhaust shield clamps	2.3–4.5 N·m (20–40 **in-lbs**)	6.21 EXHAUST SYSTEM, Disassemble and Assemble: Upswept
Exhaust shield clamps	8.8–10.8 N·m (78–96 **in-lbs**)	6.21 EXHAUST SYSTEM, Disassemble and Assemble: Two Into One

Exhaust shield screws	12.2–14.9 N·m (108–132 **in-lbs**)	6.21 EXHAUST SYSTEM, Disassemble and Assemble: Upswept
Exhaust support clamp screw	54.2–67.8 N·m (40–50 ft-lbs)	6.21 EXHAUST SYSTEM, Install
Exhaust to engine flange nuts	11.3–13.6 N·m (100–120 **in-lbs**)	6.21 EXHAUST SYSTEM, Install
Fuel fill port screw (FXDRS)	2.3–2.7 N·m (20–24 **in-lbs**)	6.9 FUEL INLET TRIM, Install
Fuel line to fuel rail screw	2.5–4.5 N·m (22–40 **in-lbs**)	6.7 FUEL LINE, Install
Fuel line to fuel rail screw	2.5–4.5 N·m (22–40 **in-lbs**)	6.17 INDUCTION MODULE, Install
Fuel pump assembly screws	4.5–5 N·m (40–45 **in-lbs**)	6.11 FUEL PUMP, Install
Fuel rail screws	3.5–5.5 N·m (31–49 **in-lbs**)	6.16 FUEL INJECTORS, Install
Fuel tank mounting screw	38–43.4 N·m (28–32 ft-lbs)	6.6 PURGE FUEL LINE, Secure Fuel Tank
Fuel tank mounting screw	38–43.4 N·m (28–32 ft-lbs)	6.6 PURGE FUEL LINE, Secure Fuel Tank
Fuel tank vent screws	9.5–12.2 N·m (84–108 **in-lbs**)	6.10 FUEL TANK, Install
HO2S (Heated oxygen sensor)	16.3–19 N·m (12–14 ft-lbs)	6.19 HEATED OXYGEN SENSORS (HO2S), Install
Induction module bracket	7.5–9.5 N·m (66–84 **in-lbs**)	6.17 INDUCTION MODULE, Assemble
Induction module flange adapter screws	10.9–17.6 N·m (96–156 **in-lbs**)	6.17 INDUCTION MODULE, Install *metric*
Induction module flange adapter screws	10.9–17.6 N·m (96–156 **in-lbs**)	6.17 INDUCTION MODULE, Install *metric*
Muffler clamp	51.5–58.3 N·m (38–43 ft-lbs)	6.20 MUFFLERS, Install
Muffler end cap screws	8.8–10.8 N·m (78–96 **in-lbs**)	6.20 MUFFLERS, Install
Muffler intermediate exhaust shield screw	12.2–14.9 N·m (108–132 **in-lbs**)	6.21 EXHAUST SYSTEM, Disassemble and Assemble: Two Into One
Muffler screws	13.5–16.3 N·m (119–144 **in-lbs**)	6.20 MUFFLERS, Install
Muffler screws	13.6–16.3 N·m (120–144 **in-lbs**)	6.21 EXHAUST SYSTEM, Install

Muffler shield clamps	2.3–4.5 N·m (20–40 **in-lbs**)	**6.21 EXHAUST SYSTEM, Disassemble and Assemble: Standard**
Temperature manifold absolute pressure sensor (TMAP) screw	2.5–4.5 N·m (23–39 **in-lbs**)	**6.14 TEMPERATURE MANIFOLD ABSOLUTE PRESSURE (TMAP) SENSOR, Install**
Throttle body to manifold screws	4–6 N·m (35–53 **in-lbs**)	**6.17 INDUCTION MODULE, Assemble**

Table 1. Capacities

ITEM	MODEL	GALLONS	LITERS
Fuel tank	FLDE, FLFB, FLHC, FLSB, FLSL, FXLR	5	18.9
	FXBB, FXBR, FXFB	3.5	13.25
	FXDRS	4.4	16.7
Low fuel warning light on (approximate)	All but FXDRS	1.0	3.8
	FXDRS	1.4	5.3

Table 2. Fuel Pump Specifications

MEASUREMENT	VALUE
Pressure	375–425 kPa (54–62 psi)
Current draw	7.5A or less

Round and Oval

1. Remove air cleaner cover and filter. See **Maintenance → INSPECT AIR FILTER**.

Square

1. Remove air cleaner cover. **Maintenance → INSPECT AIR FILTER**

Consumables

Description	Part Number	Size
LOCTITE 565 THREAD SEALANT	99818-97	6 ml (¼ fl oz)

Remove

1. See Figure 1. Remove breather tube assembly (5) from breather bolts (6).
2. Remove breather bolts.
3. Remove backplate (7).
4. Discard seal ring (8).
5. Verify that passages in breather bolts (6) are clear.

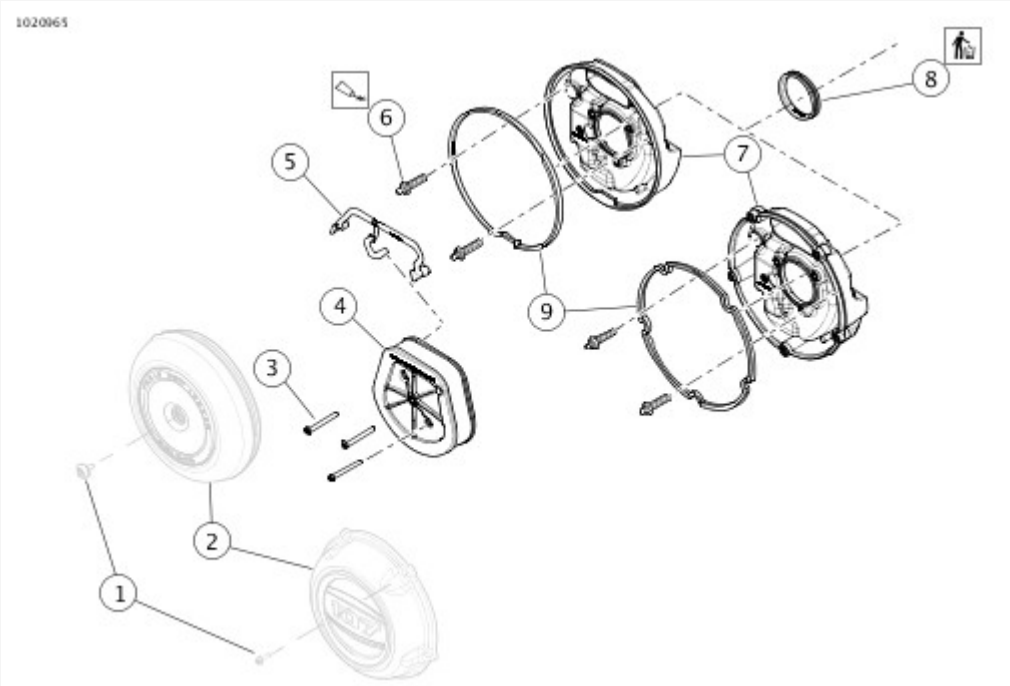

View interactive image

1	Cover screw (1 or 5)
2	Air cleaner cover
3	Filter screw (3)
4	Filter element
5	Breather tube assembly
6	Breather bolt (2)
7	Backplate
8	Seal ring

9	Rubber seal

Figure 1. Air Cleaner Assembly

Install

1. See Figure 1. Install **new** seal ring (8) on backplate (7).
2. Apply thread sealant to threads of breather bolts (6).
   LOCTITE 565 THREAD SEALANT (99818-97)
3. Install backplate.
4. Install breather bolts. Hand tighten.
5. Install breather tube assembly (5) to filter element (4).
6. Install filter element.
7. Install filter element screws (3). Tighten.
   Torque: 5.4–8.1 N·m (48–72 **in-lbs**) *Air filter element screws*
8. Tighten breather bolts.
   Torque: 29.8–32.5 N·m (22–24 ft-lbs) *Breather bolts*
9. Attach breather tube assembly (5) to breather bolts.

NOTE

Failure to connect the breather tubes allows crankcase vapors to be vented into the atmosphere in violation of legal emissions standards.

Consumables

Description	Part Number	Size
LOCTITE 565 THREAD SEALANT	99818-97	6 ml (¼ fl oz)

Remove

1. See Figure 1. Remove breather tubes (1) from breather bolts (2).
2. Remove breather bolts.
3. Remove backplate screws (5).
4. Remove backplate (4).
5. Discard gasket (3).
6. Verify that passages in breather bolts are clear.

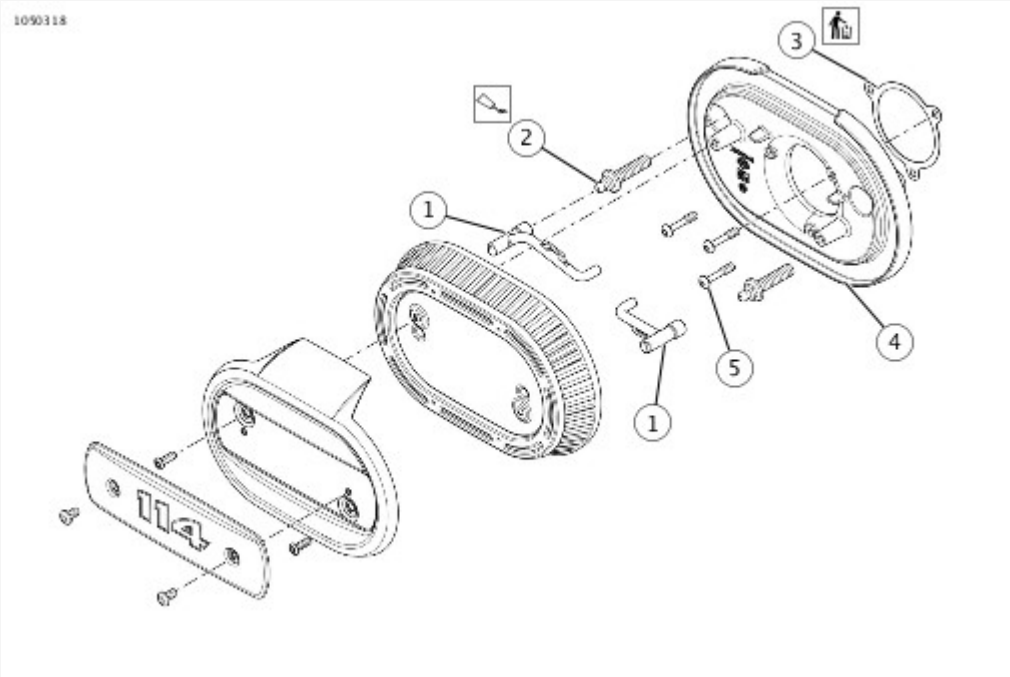

View interactive image

1	Breather tube (2)
2	Breather bolt (2)
3	Gasket
4	Backplate
5	Backplate screw (3)

Figure 1. Air Cleaner Assembly

Install

1. See Figure 1. Install **new** gasket (3) on backplate (4).
2. Apply thread sealant to threads of breather bolts (2).
   LOCTITE 565 THREAD SEALANT (99818-97)
3. Install backplate.
4. Install breather bolts. Hand tighten.
5. Install backplate screws (5). Tighten.
   Torque: 5.6–6.8 N·m (50–60 **in-lbs**) *Backplate screws*
6. Tighten breather bolts.
   Torque: 29.8–32.5 N·m (22–24 ft-lbs) *Breather bolts*
7. Install breather tubes (1) onto breather bolts.

NOTE

Failure to connect the breather tubes allows crankcase vapors to be vented into the atmosphere in violation of legal emissions standards.

Consumables

Description	Part Number	Size
LOCTITE 565 THREAD SEALANT	99818-97	6 ml (¼ fl oz)

REMOVE

1. See Figure 1. Remove backplate.
   a. Remove screws (7).
   b. Disconnect breather tube (1) from breather bolt (2).
   c. Remove breather bolt.
   d. Disconnect breather tube (4) from breather bolt (6).
   e. Remove backplate (3).
   f. Remove breather tubes (1,4) from backplate if needed.
   g. Remove air filter. See Maintenance → INSPECT AIR FILTER → Remove and Install: Square.

INSTALL

1. Install air filter. See Maintenance → INSPECT AIR FILTER → Remove and Install: Square.
2. See Figure 1. Install backplate.
   a. Verify that passages in breather bolts are clear.
   b. Install breather tubes (1,4) in backplate (3) if removed.

      NOTE

      Verify front breather tube (4) is in the proper orientation. The front breather tube should angle towards the throttle body opening.

   c. Apply threadlocker to breather bolt (2).
      LOCTITE 565 THREAD SEALANT (99818-97)
   d. Connect breather tube (4) with backplate onto breather bolt (6).
   e. Position backplate on backplate mount (5).
   f. Install breather bolt. Hand tighten.
   g. Install screws (7). Tighten.
      Torque: 4.1–6.8 N·m (36–60 **in-lbs**) *Backplate screw, square filter*
   h. Tighten breather bolt.
      Torque: 29.8–32.5 N·m (22–24 ft-lbs) *Breather bolt, square filter*
   i. Connect breather tube (1) onto breather bolt (2).

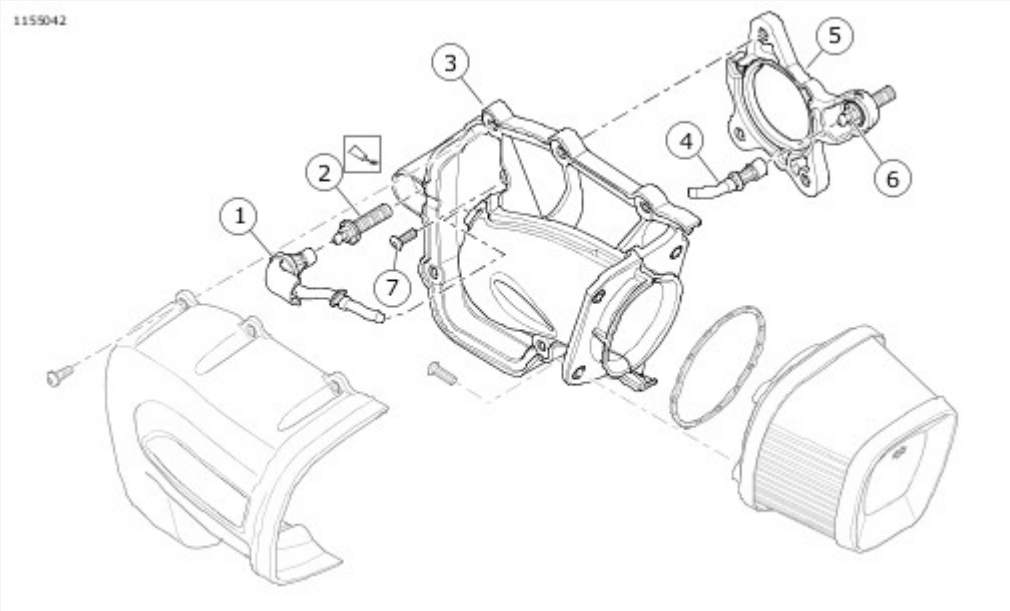

View interactive image

1	Rear breather tube
2	Breather bolt
3	Backplate assembly
4	Front breather tube
5	Backplate mount
6	Breather bolt
7	Screw (3)

Figure 1. Air Filter Assembly

Round and Oval

1. Install filter and air cleaner cover. See**Maintenance → INSPECT AIR FILTER**

Square

1. Install air cleaner cover. See **Maintenance → INSPECT AIR FILTER**

1. Remove main fuse. See **Electrical → POWER DISCONNECT**.
2. **All but FXFB, FXFBS:** Remove seat. See **Chassis → SEAT**.

Remove

1. See Figure 1. Detach console.
    a. Remove front screws (1).
    b. Remove rear screw (4)
    c. Move console (2) rearward.
2. See Figure 2. Disconnect connector.
    a. Remove grommet (4) from backbone (1).
    b. Pull harness (2) from backbone.

NOTE

See the electrical diagnostic manual for the appropriate disassembly procedure for the connector.

    c. Disconnect connector (3).
3. Remove console.

Install

1. See Figure 2. Connect connector.
    a. Connect connector (3).
    b. Feed harness (2) into backbone (1).
    c. position grommet (4) into backbone.
2. See Figure 1. Install console.
    a. Align console (2) with bracket (3).
    b. Install front screws (1).
    c. Install rear screw (4).
    d. Tighten front screws.
    Torque: 3.4–5.6 N·m (30–50 **in-lbs**) *Console screws (Front)*
    e. Tighten rear screw.
    Torque: 2.8–3.4 N·m (25–30 **in-lbs**) *Console screw (Rear)*

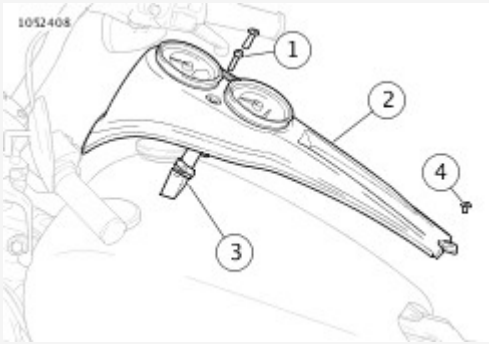

View interactive image

1	Front screw (2)
2	Console

3	Bracket
4	Rear screw

Figure 1. Console

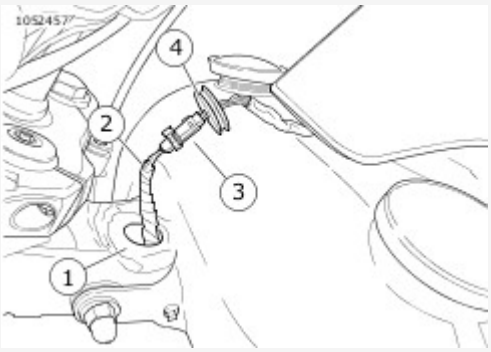

View interactive image

1	Backbone
2	Harness
3	Connector
4	Grommet

Figure 2. Console Harness

Remove

1. See Figure 1. Detach console.
    a. Remove front screw (1).
    b. Remove rear screw (4)
    c. Move console (2) rearward.
2. See Figure 2. Disconnect connector.
    a. Remove grommet (4) from backbone (1).
    b. Pull harness (2) from backbone.

> **NOTE**
>
> See the electrical diagnostic manual for the appropriate disassembly procedure for the connector.

    c. Disconnect connector (3).
3. Remove console.

Install

1. See Figure 2. Connect connector.
    a. Connect connector (3).
    b. Feed harness (2) into backbone (1).
    c. Position grommet (4) into backbone.
2. See Figure 1. Install console.
    a. Align console (2) with bracket (3).
    b. Install front screw (1).
    c. Install rear screw (4).
    d. Tighten front screw.
    Torque: 3.4–5.6 N·m (30–50 **in-lbs**) *Console screw (Front)*
    e. Tighten rear screw.
    Torque: 2.8–3.4 N·m (25–30 **in-lbs**) *Console screw (Rear)*

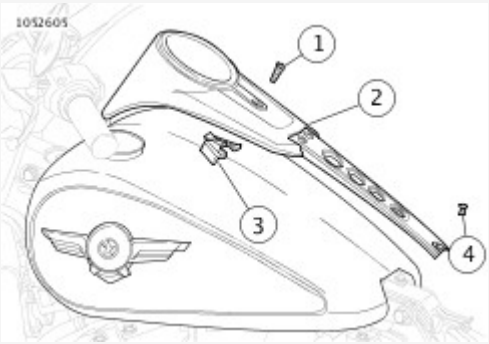

View interactive image

1	Front screw
2	Console

3	Bracket
4	Rear screw

Figure 1. Console

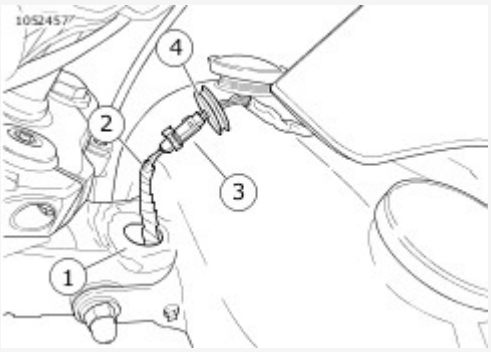

View interactive image

1	Backbone
2	Harness
3	Connector
4	Grommet

Figure 2. Console Harness

Remove

1. See Figure 1. Detach console.
   a. Remove screws (1).
   b. Move console (2) rearward.
2. See Figure 2. Disconnect connector.
   a. Remove grommet (4) from backbone (1).
   b. Pull harness (2) from backbone.

NOTE

See the electrical diagnostic manual for the appropriate disassembly procedure for the connector.

   c. Disconnect connector (3).

Install

1. See Figure 2. Connect connector.
   a. Connect connector (3).
   b. Feed harness (2) into backbone (1).
   c. Seat grommet (4) into backbone.
2. See Figure 1. Install console.
   a. Align console (2) with bracket (3).
   b. Install screws (1). Tighten.
      Torque: 4.5–5.6 N·m (40–50 **in-lbs**) *Console screws*

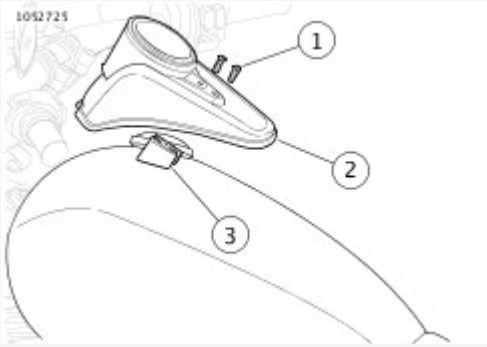

View interactive image

1	Screw (2)
2	Console
3	Bracket

Figure 1. Console

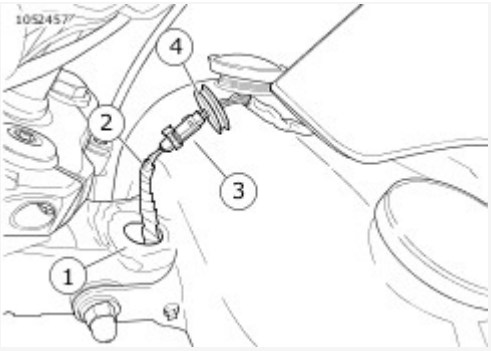

View interactive image

1	Backbone
2	Harness
3	Connector
4	Grommet

Figure 2. Console Harness

1. **All but FXFB, FXFBS** Install Seat. See **Chassis → SEAT**.
2. Install main fuse. See **Electrical → POWER DISCONNECT**.

WARNING

Gasoline is extremely flammable and highly explosive. Keep gasoline away from ignition sources which could result in death or serious injury. See the Safety chapter. (00635c)

1. Remove seat. See **Chassis → SEAT**.

WARNING

To prevent spray of fuel, purge system of high-pressure fuel before supply line is disconnected. Gasoline is extremely flammable and highly explosive, which could result in death or serious injury. (00275a)

2. Purge fuel system. See **Fuel and Exhaust → PURGE FUEL LINE**.

Special Tools

Description	Part Number	Qty.
FUEL PRESSURE GAUGE	HD-41182	1

1. See Figure 1. Attach valve union (2) on FUEL PRESSURE GAUGE (Part Number:HD-41182) to schrader valve (4) on fuel line (3).
2. Close fuel valve (1).
3. Insert clear tube of fuel pressure gauge into a suitable container.
4. Start engine.
5. Open fuel valve.
6. Open clear tube bleeder valve to remove air from fuel pressure tester.
7. Close clear tube bleeder valve.
8. Operate engine at various speeds. Note pressure gauge reading. Compare readings to specifications. Fuel and Exhaust → SPECIFICATIONS → Specifications → Fuel Pump Specifications.
9. Turn off engine.
10. Open clear tube bleeder to remove pressure from fuel pressure gauge.
11. Remove fuel pressure tester.

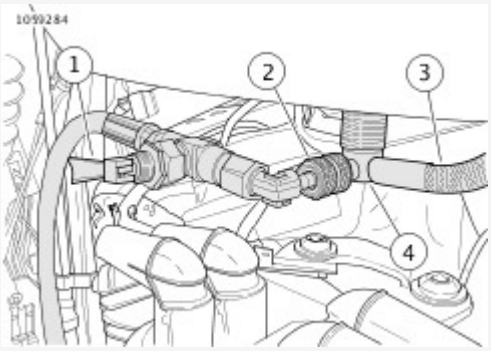

View interactive image

1	Fuel valve (closed position)
2	Valve union
3	Fuel line
4	Schrader valve

Figure 1. Fuel Pressure Test

1. Secure fuel tank. See **Fuel and Exhaust → PURGE FUEL LINE**.
2. Install seat. See **Chassis → SEAT**.

1. Remove seat. See **Chassis → SEAT**.

1. See **Fuel and Exhaust → PURGE FUEL LINE → Secure Fuel Tank → Fuel Tank**. Lift rear of fuel tank.
    a. Loosen front fuel tank mounting screw (5).
    b. Remove rear fuel tank mounting screw (1), washers (2), and acorn nut (3).

NOTE
Verify fuel tank or fuel tank console do not contact any components when lifting.

    c. Lift rear of fuel tank.

1. See **Fuel and Exhaust → PURGE FUEL LINE → Secure Fuel Tank → Fuel Pump Connector**. Disconnect fuel pump connector.
    a. Disconnect fuel pump connector.
2. Purge fuel line.
    a. Start engine.
    b. Allow vehicle to stall.
    c. Operate starter for 3 seconds to remove any remaining fuel.

WARNING

Gasoline is extremely flammable and highly explosive. Keep gasoline away from ignition sources which could result in death or serious injury. See the Safety chapter. (00635c)

WARNING

To prevent spray of fuel, purge system of high-pressure fuel before supply line is disconnected. Gasoline is extremely flammable and highly explosive, which could result in death or serious injury. (00275a)

1. See **Figure 2**. Connect fuel pump connector.
2. See **Figure 1**. Install rear fuel tank mounting screw (1), washers (2), and acorn nut (3). Tighten.
   Torque: 38–43.4 N·m (28–32 ft-lbs) *Fuel tank mounting screw*
3. Tighten front fuel tank mounting screw (5) and acorn nut.
   Torque: 38–43.4 N·m (28–32 ft-lbs) *Fuel tank mounting screw*

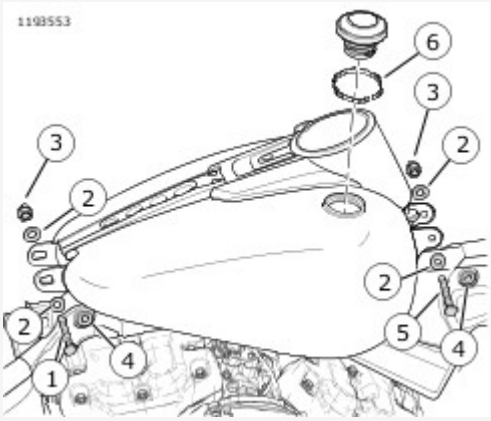

View interactive image

1	Rear fuel tank mounting screw
2	Washer (4)
3	Acorn nut (2)
4	Bushing and grommet (4)
5	Front fuel tank mounting screw
6	Filler neck ring

Figure 1. Fuel Tank

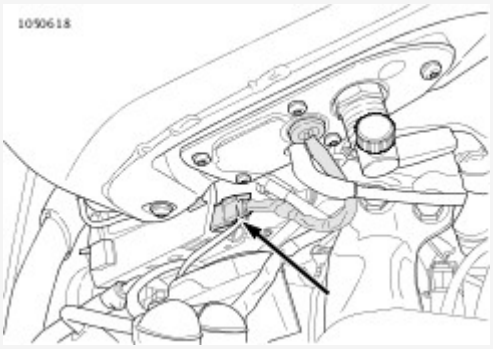

View interactive image

Figure 2. Fuel Pump Connector

1. Install seat. See **Chassis → SEAT**.

WARNING

Gasoline is extremely flammable and highly explosive. Keep gasoline away from ignition sources which could result in death or serious injury. See the Safety chapter. (00635c)

1. Remove seat. See **Chassis → SEAT**.

WARNING

To prevent spray of fuel, purge system of high-pressure fuel before supply line is disconnected. Gasoline is extremely flammable and highly explosive, which could result in death or serious injury. (00275a)

2. Purge fuel system. See **Fuel and Exhaust → PURGE FUEL LINE**.
3. Remove main fuse. See **Electrical → POWER DISCONNECT**.
4. Remove air cleaner. See **Maintenance → INSPECT AIR FILTER**.
5. Remove air cleaner backplate assembly. See **Fuel and Exhaust → AIR CLEANER BACKPLATE ASSEMBLY**.

Remove

1. See **Fuel and Exhaust → FUEL LINE → Install → Fuel Line to Fuel Tank** Disconnect fuel line from fuel tank.
    a. Push up on sleeve of quick disconnect fitting (1).
    b. Remove fuel line (2) from quick disconnect fitting.
2. See **Fuel and Exhaust → FUEL LINE → Install → Fuel Line to Fuel Rail** Disconnect fuel line from fuel rail.
    a. Remove screw (2).
    b. Pull fuel line (1) away from fuel rail (3).
    c. Inspect O-ring (4) for damage. replace as necessary.

1. See **Figure 1**. Install fuel line to fuel rail.
   a. Install **new** O-ring (4) to fuel line (1), if removed.
   b. Connect fuel line to fuel rail (3).
   c. Install screw (2). Tighten.
      Torque: 2.5–4.5 N·m (22–40 **in-lbs**) *Fuel line to fuel rail screw*
2. See **Figure 2** Install fuel line to fuel tank.
   a. Press up on sleeve of quick disconnect fitting (1).
   b. Connect fuel line (2) to quick disconnect fitting.
   c. Release sleeve of quick disconnect fitting to secure fuel line.

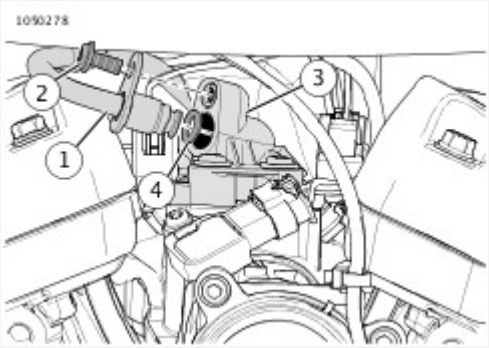

View interactive image

1	Fuel line
2	Screw
3	Fuel rail
4	O-ring

Figure 1. Fuel Line to Fuel Rail

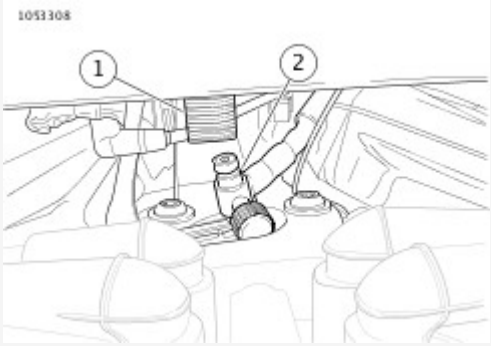

View interactive image

1	Quick disconnect fitting
2	Fuel line

Figure 2. Fuel Line to Fuel Tank

1. Secure fuel tank. See **Fuel and Exhaust → PURGE FUEL LINE**.
2. Install seat. See **Chassis → SEAT**.
3. Install air cleaner backplate assembly. See **Fuel and Exhaust → AIR CLEANER BACKPLATE ASSEMBLY**.
4. Install air cleaner. See **Maintenance → INSPECT AIR FILTER**.
5. Install main fuse. See **Electrical → POWER DISCONNECT**.
6. Set OFF/RUN switch to RUN and check for leaks.

1. See **Fuel and Exhaust → DECORATIVE FUEL CAP → Install → Decorative Fuel Cap**. Remove decorative fuel cap from mounting bracket.
    a. Press down and turn decorative fuel cap (1) counterclockwise.
    b. Remove decorative fuel cap from mounting bracket (3).
2. See **Fuel and Exhaust → DECORATIVE FUEL CAP → Install → Bracket Orientation**. Mark location of mounting bracket with masking tape.

NOTE

Wear protective gloves.

3. Remove mounting bracket.
    a. Saw behind mounting bracket with mono-filament fishing line or waxed dental floss to separate bracket from fuel tank.

NOTE

For maximum bond, mounting surface must be clean and dry.

4. Clean mounting surface on fuel tank.
    a. Use 3M GENERAL PURPOSE ADHESIVE REMOVER to remove remaining foam backing tape and adhesive from mounting surface.
    b. Clean the mounting surface with a mixture of 50 percent isopropyl alcohol and 50 percent distilled water.
5. **If reusing mounting bracket:** Clean bracket mounting surface.
    a. Use 3M GENERAL PURPOSE ADHESIVE REMOVER to remove remaining foam backing tape and adhesive from mounting bracket.
    b. Clean the mounting surface with a mixture of 50 percent isopropyl alcohol and 50 percent distilled water.

NOTE

Apply mounting bracket within minutes of cleaning to prevent possible surface contamination.

NOTE

- Apply in ambient temperatures between 21–38 °C (70–100 °F)
- Do not remove protective film from adhesive until ready to apply.

1. **If reusing mounting bracket:** See Figure 1. Apply adhesive (3) to back of mounting bracket (2).
2. See Figure 2. Test fit mounting bracket to ensure proper orientation.

NOTE

- Protect adhesive from grease, oil, dust, dirt and finger prints.
- Once applied, do not shift bracket.
- The adhesive bonds in 72 hours at room temperature.

3. Install mounting bracket.
   a. Remove protective film from back of adhesive.
   b. Apply even pressure across entire surface of mounting bracket. Hold in place for 15 seconds.

NOTE

- Wait 20 mins before touching mounting bracket.
- Wait 24 hours before washing.

4. See Figure 1. Install decorative fuel cap (1) to mounting bracket.
   a. Align locking lugs on decorative fuel cap with locking fingers on mounting bracket. Turn cap clockwise to lock into position.

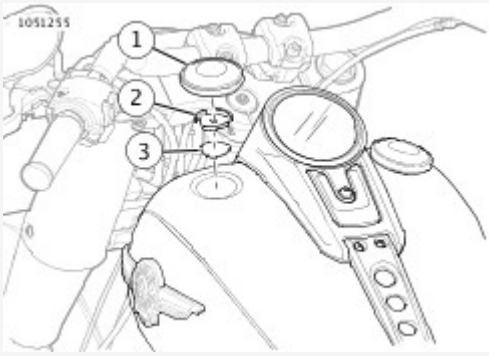

View interactive image

1	Decorative fuel cap
2	Bracket
3	Adhesive

Figure 1. Decorative Fuel Cap

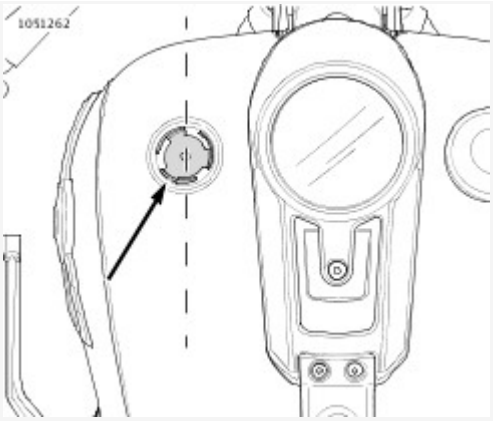

View interactive image

Figure 2. Bracket Orientation

1. Remove fuel cap.

NOTE
Place shop towel in fuel opening to stop contamination.

2. See **Fuel and Exhaust → FUEL INLET TRIM → Install → Fuel Fill Port**. Remove screws (1).
3. Remove fuel inlet trim (2).

1. See **Figure 1**. Install fuel inlet trim (2).

NOTE
Clean matting surface of all debris before installing fuel inlet trim.

2. Install screws (1). Tighten.
   Torque: 3.2–3.8 N·m (28–34 **in-lbs**) *Fuel inlet trim screws (FXDRS)*
3. Install fuel cap.

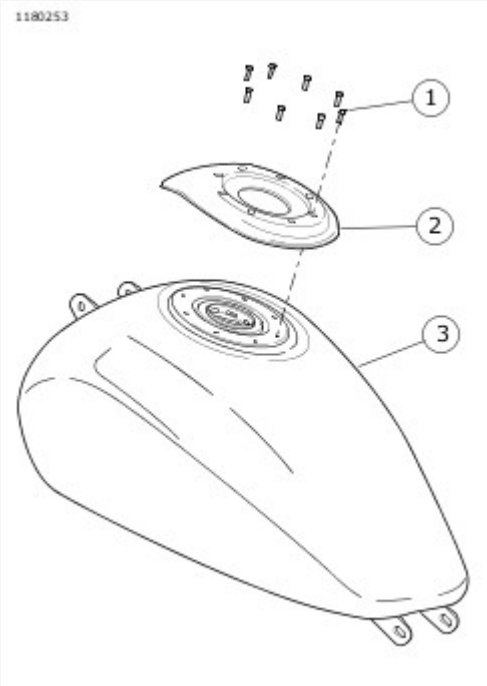

View interactive image

1	Screw (8)
2	Fuel inlet trim
3	Fuel tank

Figure 1. Fuel Fill Port

WARNING

Gasoline is extremely flammable and highly explosive. Keep gasoline away from ignition sources which could result in death or serious injury. See the Safety chapter. (00635c)

1. Remove seat. See **Chassis → SEAT**.
2. Purge fuel system. See **Fuel and Exhaust → PURGE FUEL LINE**.
3. Remove main fuse. See **Electrical → POWER DISCONNECT**.

WARNING

To prevent spray of fuel, purge system of high-pressure fuel before supply line is disconnected. Gasoline is extremely flammable and highly explosive, which could result in death or serious injury. (00275a)

4. Disconnect fuel line at quick disconnect fitting. See **Fuel and Exhaust → FUEL LINE**.
5. Disconnect vent line. See **Fuel and Exhaust → VENT TUBE**.
6. Drain fuel tank.
7. **If equipped with fuel tank console:**
    a. disconnect fuel tank console connector. See **Fuel and Exhaust → CONSOLE**.
    b. If necessary remove console. See **Fuel and Exhaust → CONSOLE**.

1. See **Fuel and Exhaust → FUEL TANK → Install → Fuel Tank**. Remove fuel tank.
    a. Remove front fuel tank mounting screw (5), washers (2), and acorn nut (3).
    b. Remove fuel tank.
    c. Remove bushings and grommets (4) if necessary.
2. Inspect filler neck ring (6). Replace if missing or damaged.

NOTE

Vent screws in fuel tank are for manufacturing purposes and not intended to be removed.

1. See Figure 1. Install fuel tank.
    a. Install bushings and grommets (4) if removed.
    b. Place fuel tank onto frame backbone.
    c. Loosely install front fuel tank mounting screw (5), washers (2), and acorn nut (3).

NOTE

Filler neck ring (6) is a functional part which must remain in position for proper fuel system operation.

2. Install filler neck ring (6).

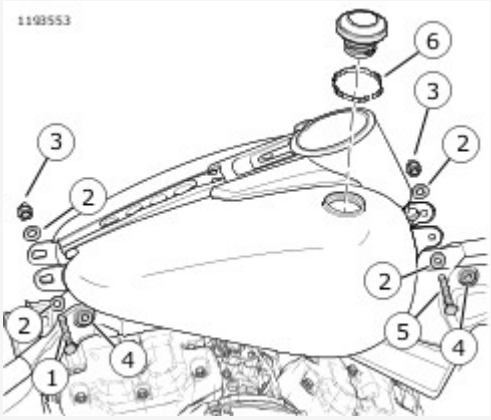

View interactive image

1	Rear fuel tank mounting screw
2	Washer (4)
3	Acorn nut (2)
4	Bushing and grommet (4)
5	Front fuel tank mounting screw
6	Filler neck ring

Figure 1. Fuel Tank

NOTE

Vent screws are not meant to be removed. If removed for any reason, replace with **new** screws.

1. See Figure 2. Install **new** screws. Tighten.
   Torque: 9.5–12.2 N·m (84–108 **in-lbs**) *Fuel tank vent screws*

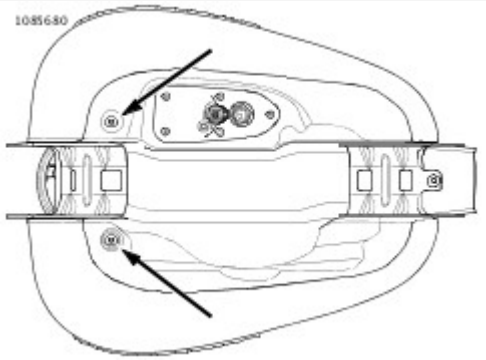

View interactive image

Figure 2. Vent Screws

1. Secure fuel tank. See **Fuel and Exhaust → PURGE FUEL LINE**.
2. **If equipped with fuel tank console:**
    a. If necessary install console. See **Fuel and Exhaust → CONSOLE**.
    b. Connect console connector. See **Fuel and Exhaust → CONSOLE**.
3. Connect vent line. See **Fuel and Exhaust → VENT TUBE**.
4. Connect fuel line at quick disconnect fitting. See **Fuel and Exhaust → FUEL LINE**.
5. Install seat. See **Chassis → SEAT**.
6. Install main fuse. See **Electrical → POWER DISCONNECT**.
7. Set OFF/RUN switch to RUN and check for leaks.

WARNING

Gasoline is extremely flammable and highly explosive. Keep gasoline away from ignition sources which could result in death or serious injury. See the Safety chapter. (00635c)

1. Remove seat. See **Chassis → SEAT**.
2. Purge fuel system. See **Fuel and Exhaust → PURGE FUEL LINE**.
3. Remove main fuse. See **Electrical → POWER DISCONNECT**.

WARNING

To prevent spray of fuel, purge system of high-pressure fuel before supply line is disconnected. Gasoline is extremely flammable and highly explosive, which could result in death or serious injury. (00275a)

4. Remove fuel tank. See **Fuel and Exhaust → FUEL TANK**.

NOTE

Fuel pumps used in 5 gallon fuel tanks are equipped with a flexible siphon tube (6).

1. See **Fuel and Exhaust → FUEL PUMP → Install → Fuel Pump**. Remove fuel pump assembly.
    a. Remove screws (1).
    b. Using a wooden tool, pull inlet strainer (3) from fuel tank.
    c. Remove fuel pump assembly (5).
2. Discard seal (4).

WARNING

Do not use solvents or other products that contain chlorine on plastic fuel system components. Chlorine can degrade plastic fuel system components, which can cause a loss of fuel system pressure or engine stalling and could result in death or serious injury. (00621b)

1. See **Fuel and Exhaust → FUEL PUMP → Install → Fuel Pump**. Clean and inspect fuel pump assembly.
   a. Inspect fuel pickup screen (3) for damage. Replace if necessary.
   b. Clean fuel pump assembly (5).
2.

   NOTE

   Placing o-ring in wrong groove will hinder fuel system venting.

   3.5 and 4.4 gal tank pumps: See **Figure 1**. Inspect o-ring (2) on vent tube (1) and verify proper location.

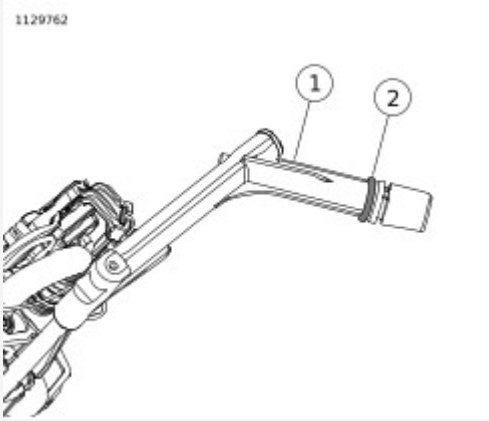

View interactive image

1	Vent tube
2	O-ring

Figure 1. Vent Tube O-ring Location

1. See Figure 1. Install **new** seal (4).
2.

NOTE

- Fuel pumps used in 5 gallon fuel tanks are equipped with a flexible siphon tube (6), siphon tube must be routed to opposite side of fuel tank during fuel pump installation.
- Do not bend float rod of fuel level sender. A bent float rod results in incorrect gauge readings.

Install fuel pump assembly.

a. Insert siphon tube into fuel tank, if equipped.
b. Insert fuel level sender float (2) into fuel tank.
c. Insert fuel pump assembly (5) half way into fuel tank.
d. Insert inlet strainer (3) into fuel tank.
e. Install fuel pump assembly.
f. Install screws (1).

3. See Figure 2. Tighten in sequence shown.
Torque: 4.5–5 N·m (40–45 **in-lbs**) *Fuel pump assembly screws*

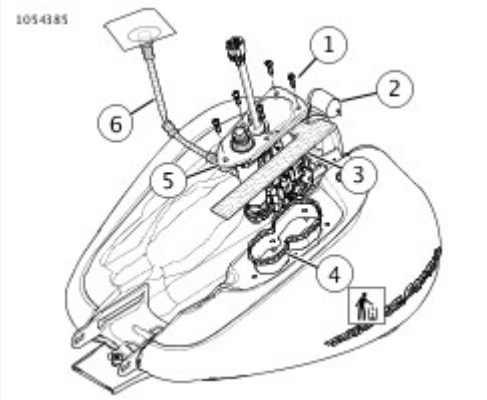

View interactive image

1	Screw (5)
2	Fuel level sender float
3	Inlet strainer
4	Seal
5	Fuel pump assembly
6	Siphon tube

Figure 1. Fuel Pump

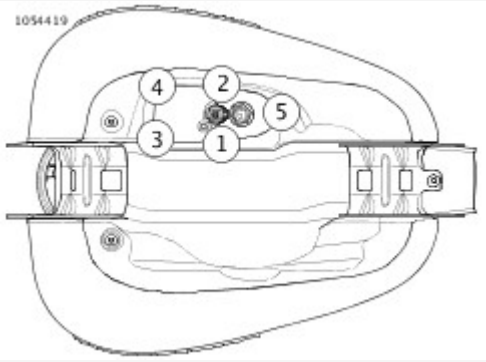

View interactive image

Figure 2. Tightening Sequence

Level Sender

1. See Fuel and Exhaust → FUEL PUMP → Assemble → Level Sender. Remove level sender.
    a. Disconnect electrical connector (4).
    b. Press tab (1) to release level sender bracket (2).
    c. Remove level sender (3).

Pressure Regulator

1. See Fuel and Exhaust → FUEL PUMP → Assemble → Pressure Regulator. Remove regulator cover.
    a. Remove regulator cover retaining clip (4).
    b. Remove regulator cover (1).
2. Discard pressure regulator (2) and adapter with O-ring (3).

NOTE

Plastic portion of pressure regulator may separate from assembly during removal, if this occurs plastic portion must be removed before installing new pressure regulator.

Filter

1. Remove regulator cover.
2. See Fuel and Exhaust → FUEL PUMP → Assemble → Fuel Filter. Remove filter housing.
    a. Remove retaining clip (3).
    b. Remove filter housing (2) from filter base (5).
3. Remove and discard fuel filter (4).
4. Remove and discard O-ring (6).

Pump

1. Remove level sender.
2. See Fuel and Exhaust → FUEL PUMP → Assemble → Fuel Pump. Remove pump retainer.
    a. Press tabs (3) to release pump retainer (2).
    b. Remove pump retainer.
3. Disconnect electrical connectors (1).
4. See Fuel and Exhaust → FUEL PUMP → Assemble → Fuel Pump and Inlet Strainer. Remove pump (4).
5. Remove lower isolator (1).
6. If necessary remove and discard inlet strainer (5).
7. Inspect parts for damage. Replace if necessary.
    1. pump
    2. spacer (3)
    3. O-ring (2)

Inlet Strainer

1. See Fuel and Exhaust → FUEL PUMP → Assemble → Fuel Pump and Inlet Strainer. Remove pump (4).
2. Remove and discard inlet strainer (5).

Level Sender

1. See Figure 1 Install level sender.
    a. Align level sender bracket (2) with tab (1).
    b. Install level sender (3).
    c. Connect electrical connector (4).

Pressure Regulator

1. See Figure 2 Install **new** pressure regulator (2) and adapter with O-ring (3).
2. Install regulator cover.
    a. Install regulator cover (1).
    b. Install regulator cover retaining clip (4).

Filter

1. See Figure 3 Install **new** filter (4).
2. Install **new** O-ring (6).
3. Install filter housing.
    a. Install filter housing (2) onto filter base (5) and bracket (1).
    b. Install filter housing retaining clip (3).
4. Install regulator cover.

Pump

1. See Figure 5 If necessary install **new** inlet strainer (5).
2. Install fuel pump spacer (3) and, O-ring (2).
3. Install lower isolator (1).
4. Install pump (4).
5. See Figure 4 Connect electrical connectors (1).
6. Install pump retainer (2).
7. Install level sender.

Inlet Strainer

1. See Figure 5 Install **new** inlet strainer (5) in proper orientation.
2. Install pump (4).

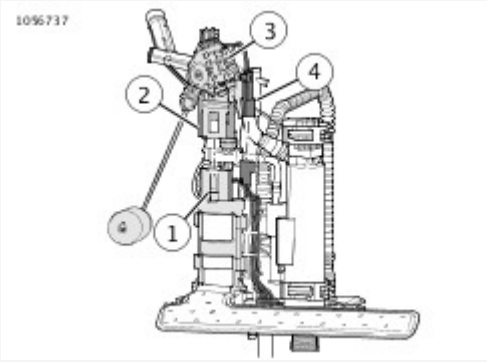

View interactive image

1	Tab
2	Level sender bracket
3	Level sender
4	Electrical connector

Figure 1. Level Sender

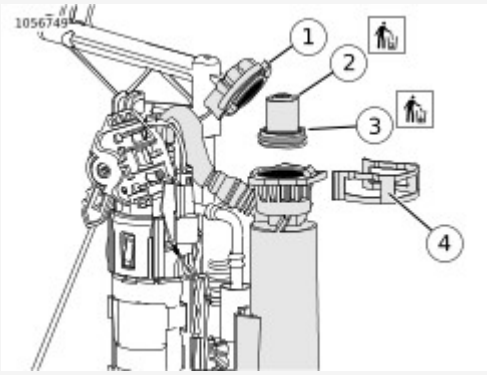

View interactive image

1	Regulator cover
2	Pressure regulator
3	Adapter with O-ring
4	Retaining clip

Figure 2. Pressure Regulator

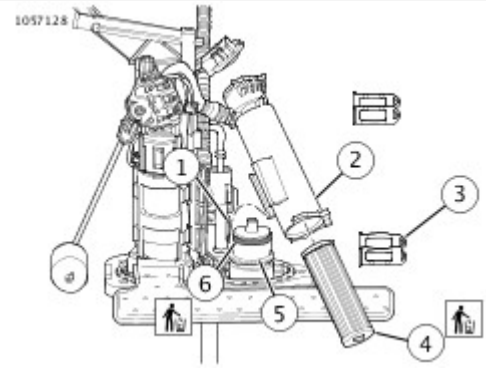

View interactive image

1	Bracket
2	Filter housing
3	Retaining clip
4	Fuel filter
5	Filter base
6	O-ring

Figure 3. Fuel Filter

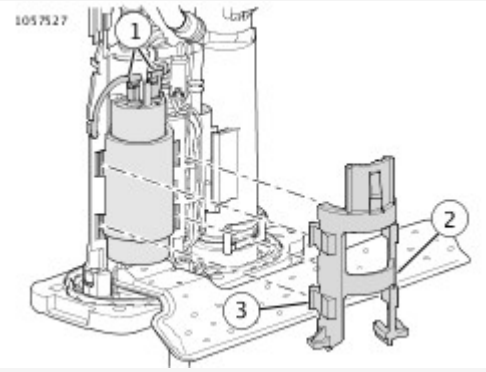

View interactive image

1	Electrical connector (2)
2	Pump retainer
3	Tab (4)

Figure 4. Fuel Pump

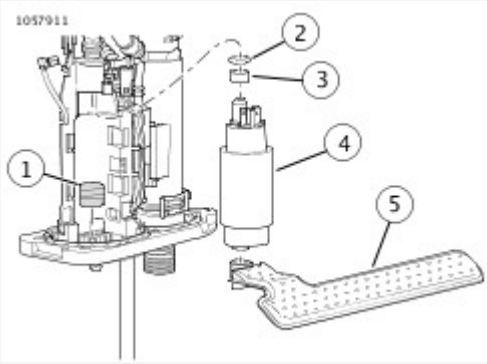

View interactive image

1	Lower isolator
2	O-ring
3	Spacer
4	Pump
5	Inlet strainer

Figure 5. Fuel Pump and Inlet Strainer

1. Install fuel tank. See **Fuel and Exhaust → FUEL TANK**.
2. Install seat. See **Chassis → SEAT**.
3. Install main fuse. See **Electrical → POWER DISCONNECT**.

NOTE

Add at least 3.8 L (1 gal) of fuel to fuel tank before operating fuel pump.

4. Set OFF/RUN switch to RUN and check for leaks.

1. Remove seat. See **Chassis → SEAT**.
2. Remove left side cover. See**Chassis → LEFT SIDE COVER**.
3. Remove main fuse. See **Electrical → POWER DISCONNECT**.

NOTE

Right side cover, battery and tray removal are only necessary if replacing lower vent line.

4. Remove right side cover. See **Chassis → RIGHT SIDE COVER**.
5. Remove battery. See **Maintenance → INSPECT BATTERY**.
6. Remove battery tray. See **Electrical → BATTERY TRAY**.

1. See **Fuel and Exhaust → VENT TUBE → Install → Fuel Tank Vent Line**. Remove upper vent line.
    a. Remove and discard cable strap (1).
    b. Disconnect upper vent line (2) from vapor valve (3).
    c. Disconnect upper vent line from fuel tank.
    d. Remove upper vent line.
2. Remove lower vent line.
    a. Disconnect lower vent line (4) from vapor valve.
    b. Remove lower vent line.

1. See **Figure 1**. Install upper vent line.
    a. Connect upper vent line (2) to fuel tank.
    b. Connect upper vent line to vapor valve (3).
    c. Install **new** cable strap (1).
2. Install lower vent line.
    a. Install lower vent line (4).
    b. Connect lower vent line to vapor valve.

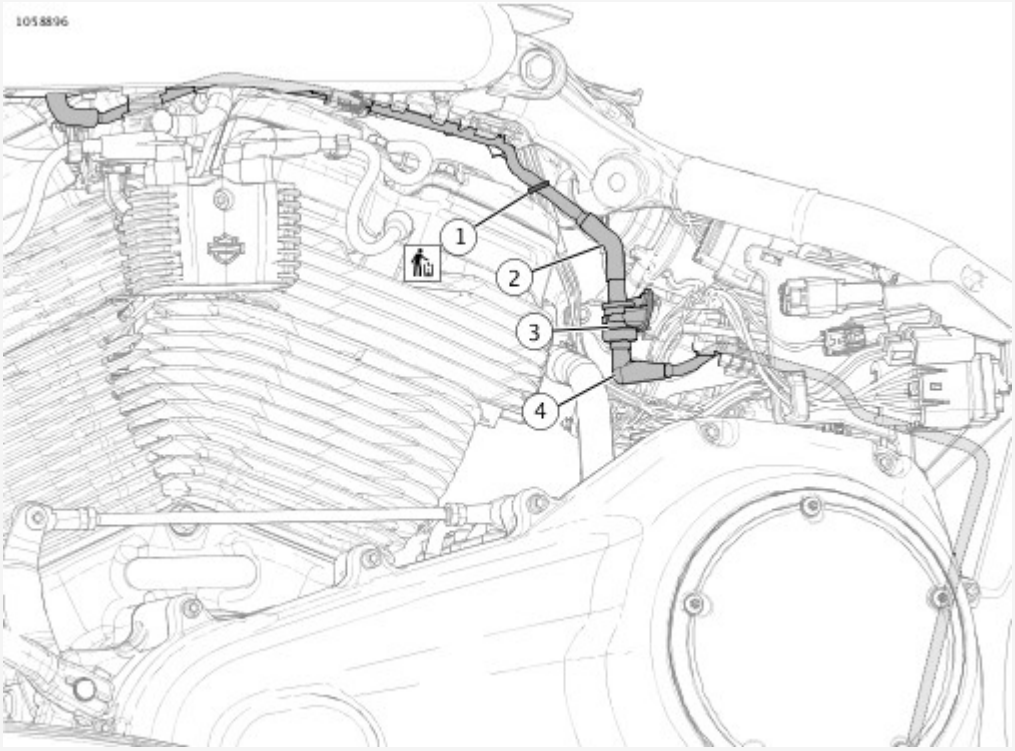

View interactive image

1	Cable strap
2	Upper vent line
3	Vapor valve
4	Lower vent line

Figure 1. Fuel Tank Vent Line

1. Install battery tray, if removed. See **Electrical → BATTERY TRAY**.
2. Install battery, if removed. See **Maintenance → INSPECT BATTERY**.
3. Install right side cover, if removed. See **Chassis → RIGHT SIDE COVER**.
4. Install seat. See **Chassis → SEAT**.
5. Install main fuse. See **Electrical → POWER DISCONNECT**.
6. Install left side cover. See **Chassis → LEFT SIDE COVER**.

1. Remove left side cover. See **Chassis → LEFT SIDE COVER**.

1. See **Fuel and Exhaust → VAPOR VALVE → Install → Vapor Valve**. Remove vapor valve.
    a. Remove vent lines (1) from vapor valve (3).
    b. Pull vapor valve from clip (2).

WARNING

Excessive pressure can build in the fuel tank if vapor valve is not mounted vertically with long fitting to top. Leaks due to excessive pressure can cause a fire or explosion, which could result in death or serious injury. (00265a)

1. See Figure 1. Install vapor valve.
   a. Press vapor valve (3) into clip (2).
   b. Install vent lines (1).

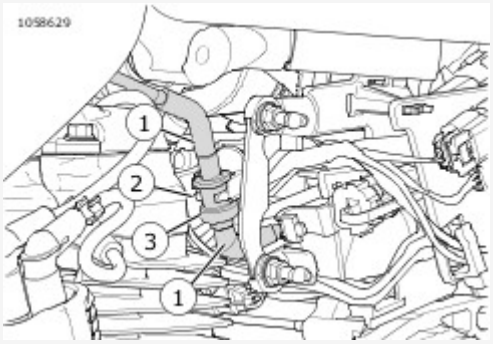

View interactive image

1	Vent lines
2	Clip
3	Vapor valve

Figure 1. Vapor Valve

1. Install left side cover. See **Chassis → LEFT SIDE COVER**.

WARNING

Gasoline is extremely flammable and highly explosive. Keep gasoline away from ignition sources which could result in death or serious injury. See the Safety chapter. (00635c)

WARNING

To prevent spray of fuel, purge system of high-pressure fuel before supply line is disconnected. Gasoline is extremely flammable and highly explosive, which could result in death or serious injury. (00275a)

1. Remove seat. See **Chassis → SEAT**.
2. Remove fuel tank. See **Fuel and Exhaust → FUEL TANK**.
3. Remove main fuse. See **Electrical → POWER DISCONNECT**.

1. Disconnect TMAP sensor connector.
2. See **Fuel and Exhaust → TEMPERATURE MANIFOLD ABSOLUTE PRESSURE (TMAP) SENSOR → Install → TMAP Sensor** . Remove TMAP sensor.
    a. Remove screw (2).
    b. Remove TMAP sensor (1).

1. See **Figure 1**. Install TMAP sensor.
   a. Install TMAP sensor (1).
   b. Install screw (2). Tighten to 2.5–4.5 N·m (23–39 **in-lbs**).
2. Connect TMAP sensor connector.

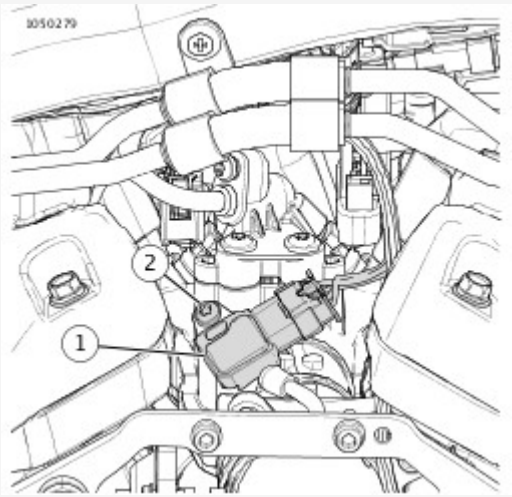

View interactive image

1	TMAP sensor
2	Screw

Figure 1. TMAP Sensor

1. Install fuel tank. See **Fuel and Exhaust → FUEL TANK**.
2. Install seat. See **Chassis → SEAT**.
3. Install main fuse. See **Electrical → POWER DISCONNECT**.

WARNING

Gasoline is extremely flammable and highly explosive. Keep gasoline away from ignition sources which could result in death or serious injury. See the Safety chapter. (00635c)

1. Remove seat. See **Chassis → SEAT**.
2. Purge fuel system. See **Fuel and Exhaust → PURGE FUEL LINE**.
3. Remove main fuse. See **Electrical → POWER DISCONNECT**.
4. Remove fuel tank. See **Fuel and Exhaust → FUEL TANK**.
5. Remove frame plug and slide front electrical caddy away from backbone. See **Electrical → FRONT ELECTRICAL CADDY**.
6. Remove right handlebar switch housing from handlebar. See **Electrical → RIGHT HAND CONTROL MODULE (RHCM)**
7. Remove right hand grip.

1. See **Fuel and Exhaust → TWIST GRIP SENSOR (TGS) → Install → TGS Connector**. Disconnect **TGS** (Twist grip sensor) connector (2)
2. Remove cable straps and note location for installation.
3. Remove **TGS**.
    a. Attach a chaser wire to the **TGS** connector
    b. Remove **TGS**.
    c. Pull **TGS** harness out of handlebar.

1.

NOTE

See Figure 2 The seal cap protects the TGS (Twist grip sensor) terminals from dirt and moisture. It also serves as a retention device for the throttle grip.

Install seal cap at end of TGS.

a. Check condition of O-ring on seal cap, replace if necessary.

b. See Figure 2 Install seal cap engaging legs in slots at end of TGS.

2. Install TGS.

a. Attach chaser wire used during removal to **new**TGS connector.

b. Draw harness into handlebar while guiding TGS into end into end of handlebar.

c. See Figure 3 Verify TGS is engaged into alignment slots in handlebar.

3. See Figure 1 Connect TGS connector (2).

4. Install **new** cable straps.

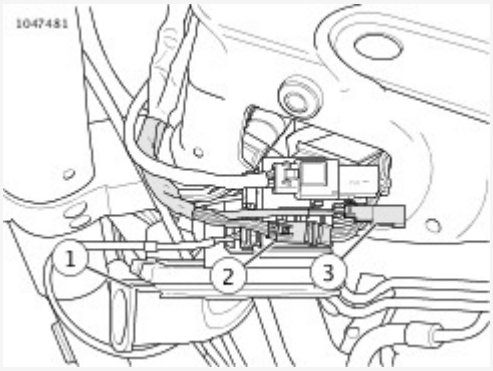

View interactive image

1	Frame plug
2	TGS connector
3	Heated hand grip connector

Figure 1. TGS Connector

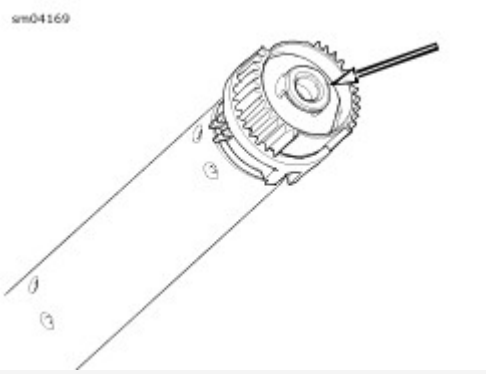

View interactive image

Figure 2. Install Seal Cap (Models without heated grips)

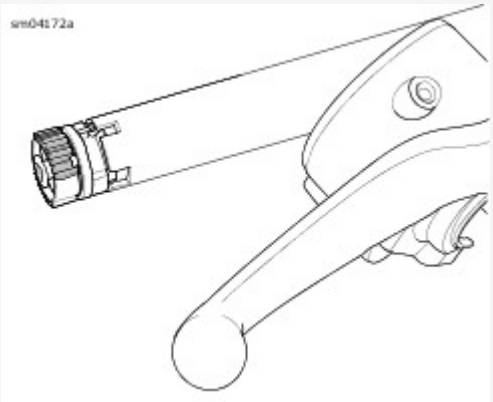

View interactive image

Figure 3. Install Twist Grip Sensor

1. Install right handgrip.
2. Install right handlebar switch housing. See **Electrical → RIGHT HAND CONTROL MODULE (RHCM)**.
3. Install front electrical caddy and frame plug. See **Electrical → FRONT ELECTRICAL CADDY**.
4. Install fuel tank. See **Fuel and Exhaust → FUEL TANK**.
5. Install seat. See **Chassis → SEAT**.
6. Install main fuse. See **Electrical → POWER DISCONNECT**.

WARNING

Gasoline is extremely flammable and highly explosive. Keep gasoline away from ignition sources which could result in death or serious injury. See the Safety chapter. (00635c)

WARNING

To prevent spray of fuel, purge system of high-pressure fuel before supply line is disconnected. Gasoline is extremely flammable and highly explosive, which could result in death or serious injury. (00275a)

1. Remove seat. See **Chassis → SEAT**.
2. Purge fuel system. See **Fuel and Exhaust → PURGE FUEL LINE**.
3. Remove main fuse. See **Electrical → POWER DISCONNECT**.
4. Remove fuel tank. See **Fuel and Exhaust → FUEL TANK**.
5. Remove air cleaner. See **Maintenance → INSPECT AIR FILTER**.
6. Remove air cleaner backplate assembly. See **Fuel and Exhaust → AIR CLEANER BACKPLATE ASSEMBLY**.

1. Disconnect fuel injector connectors.
2. See **Fuel and Exhaust → FUEL INJECTORS → Install → Fuel Injectors**. Remove fuel rail and fuel injectors.
    a. Remove screws (1).
    b. Remove fuel rail (3).
    c. Remove fuel injectors (2, 4).
3. Discard O-rings from intake manifold.

1. See **Figure 1**. Install fuel injectors to intake manifold.
   a. Install **new** O-rings into intake manifold.
   b. Install fuel injectors (2,4) to intake manifold.
2. Install fuel rail.
   a. Install fuel rail (3).
   b. Install screws (1). Tighten.
      Torque: 3.5–5.5 N·m (31–49 **in-lbs**) *Fuel rail screws*
3. Connect fuel injector connectors.
   a. Grey connector to front injector.
   b. Black connector to rear injector.

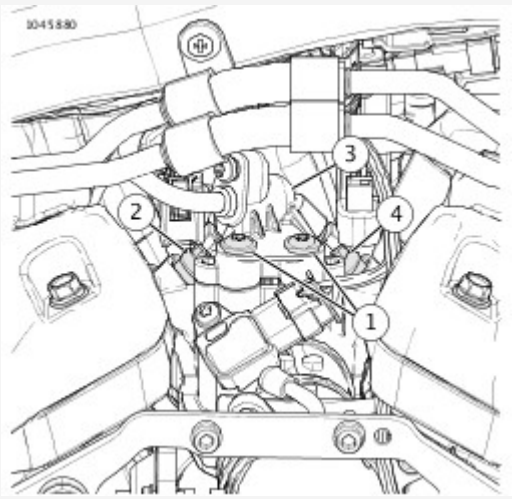

View interactive image

1	Screw (2)
2	Rear fuel injector
3	Fuel rail
4	Front fuel injector

Figure 1. Fuel Injectors

1. Install air cleaner backplate assembly. See **Fuel and Exhaust → AIR CLEANER BACKPLATE ASSEMBLY**.
2. Install air cleaner. See **Maintenance → INSPECT AIR FILTER**.
3. Install fuel tank. See **Fuel and Exhaust → FUEL TANK**.
4. Install seat. See **Chassis → SEAT**.
5. Install main fuse. See **Electrical → POWER DISCONNECT**.

WARNING

Gasoline is extremely flammable and highly explosive. Keep gasoline away from ignition sources which could result in death or serious injury. See the Safety chapter. (00635c)

1. Remove seat. See **Chassis → SEAT**.
2. Purge fuel system. See **Fuel and Exhaust → PURGE FUEL LINE**.
3. Remove main fuse. See **Electrical → POWER DISCONNECT**.
4. Remove fuel tank. See **Fuel and Exhaust → FUEL TANK**.
5. Remove air cleaner. See **Maintenance → INSPECT AIR FILTER**.
6. Remove air cleaner backplate assembly. See **Fuel and Exhaust → AIR CLEANER BACKPLATE ASSEMBLY**.

Special Tools

Description	Part Number	Qty.
INTAKE MANIFOLD WRENCH	HD-47250	1

1. **California models:** See Figure 1. Pull purge tube from fitting (13).
2. Disconnect connectors:
    a. Remove TMAP sensor connector (10).
    b. Remove front fuel injector connector (8).
    c. Remove rear fuel injector connector (5).
    d. Remove TCA connector (11).
    e. Release harness from anchor point (12).

NOTE

See Figure 2. For best results, use the INTAKE MANIFOLD WRENCH (Part Number:HD-47250).

3. See Figure 1. Remove right side screws (3).
4. Loosen left side screws (4).
5. Remove induction module from right side.
6. Discard seals (1).
7. Remove flange adapters (2, 9).
8. Disconnect fuel line from induction module.
    a. Remove screw (6).
    b. Pull fuel line from fuel rail inlet.
    c. Discard O-ring (7).

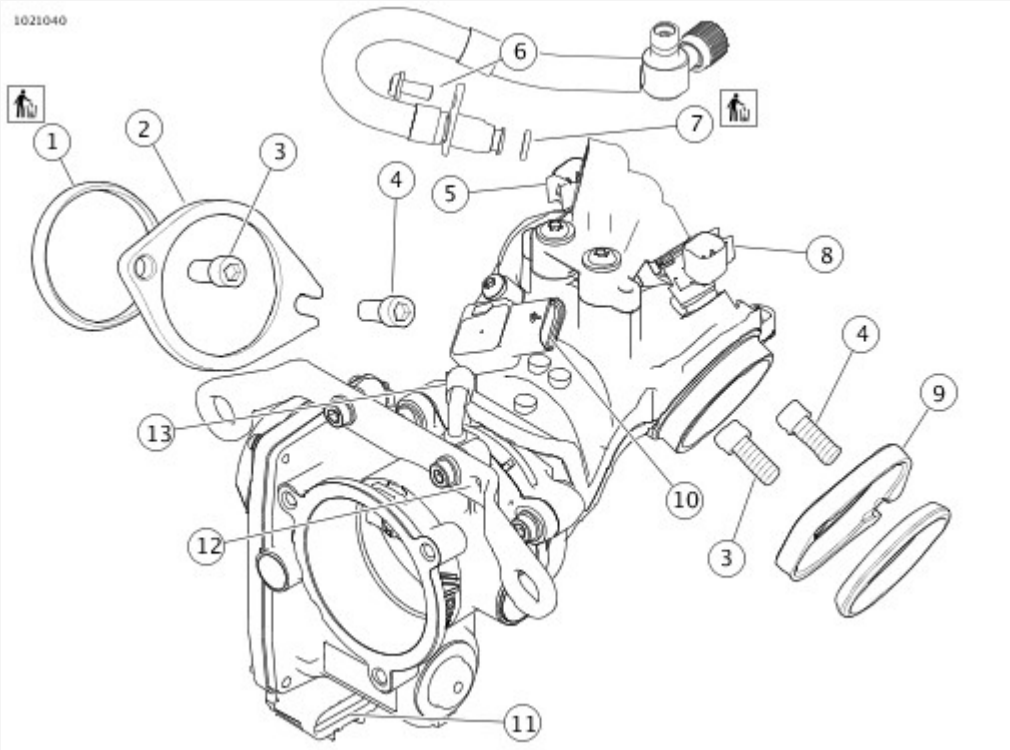

View interactive image

1	Seal (2)
2	Rear flange adapter
3	Right side screw (2)
4	Left side screw (2)
5	Rear fuel injector connector
6	Screw
7	O-ring
8	Front fuel injector connector
9	Front flange adapter
10	TMAP sensor connector
11	TCA connector
12	TCA harness anchor point
13	Purge tube fitting/cap

Figure 1. Induction Module Assembly

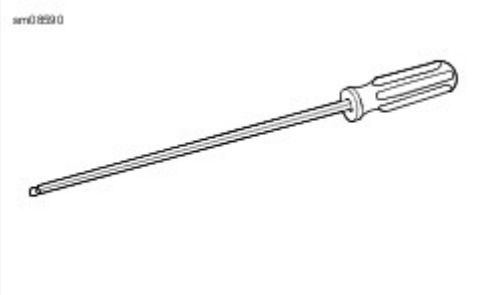

View interactive image

Figure 2. Intake Manifold Wrench

Special Tools

Description	Part Number	Qty.
INTAKE MANIFOLD WRENCH	HD-47250	1

1. Connect fuel line to induction module.
   a. See **Fuel and Exhaust → INDUCTION MODULE → Remove → Induction Module Assembly**. Install **new** O-ring (7).
   b. Push fuel line firmly onto fuel rail inlet.
   c. Install screw (6). Tighten.
   Torque: 2.5–4.5 N·m (22–40 **in-lbs**) *Fuel line to fuel rail screw*
2. With the counterbore facing outward, install flange adapters (2, 9) onto the induction module.
3. Place **new** seal (1) in each flange adapter with the beveled side against the counterbore.

> **NOTE**
>
> For best results, use the **INTAKE MANIFOLD WRENCH (Part Number:HD-47250)**.

4. Install induction module.
   a. Slide induction module into position until slots engage left side screws (4).
   b. Start right side screws (3).
   c. Temporarily fasten mounting bracket to cylinder heads with breather bolts.
5. Tighten right side screws (3) until snug.
6. Tighten left side screws (4).
   Torque: 10.9–17.6 N·m (96–156 **in-lbs**) *Induction module flange adapter screws*
7. Tighten right side screws (3).
   Torque: 10.9–17.6 N·m (96–156 **in-lbs**) *Induction module flange adapter screws*
8. Install connectors:
   a. Install rear fuel injector connector (5) (black).
   b. Install front fuel injector connector (8) (grey).
   c. Install TMAP sensor connector (10).
   d. Install TCA connector (11).
9. Capture TCA harness to anchor point (12) with **new** anchored cable strap.
10. **California models:** Connect purge tube to fitting (13).
11. **Non-California models:** Inspect rubber cap for damage. Replace as necessary.

Throttle Body

NOTE

The throttle body can be removed without removing the entire induction module.

1. **Induction module still installed:** Disconnect TCM connector.
2. See Fuel and Exhaust → INDUCTION MODULE → Assemble → Induction Module Assembly Remove bracket (1).
   a. Remove screws (2).
   b. Remove bracket.
3. Remove throttle body (4).
   a. Remove screws (3).
   b. Remove throttle body.
   c. **California models:** Disconnect vent hose.
   d. Discard gasket (6).

Induction Manifold

1. See Fuel and Exhaust → INDUCTION MODULE → Assemble → Induction Module Assembly. Remove TMAP sensor (7). See Fuel and Exhaust → TEMPERATURE MANIFOLD ABSOLUTE PRESSURE (TMAP) SENSOR.
2. Remove fuel rail (9) and fuel injectors (8, 10). See Fuel and Exhaust → FUEL INJECTORS.

Induction Manifold

1. See Figure 1. Install TMAP sensor (7). See Fuel and Exhaust → TEMPERATURE MANIFOLD ABSOLUTE PRESSURE (TMAP) SENSOR.
2. Install fuel injectors (8, 10) and fuel rail (9). See Fuel and Exhaust → FUEL INJECTORS.

Throttle Body

1. See Figure 1. Install throttle body (4).
   a. Install **new** gasket (6).
   b. Install throttle body.
   c. Install screws (3).
      Torque: 4–6 N·m (35–53 **in-lbs**) *Throttle body to manifold screws*
   d. If removed, install **new** rubber cap (5) or connect vent hose.
2. Install bracket (1) with screws (2).
   Torque: 7.5–9.5 N·m (66–84 **in-lbs**) *Induction module bracket*
3. **Induction module still installed:** Connect TCM connector.

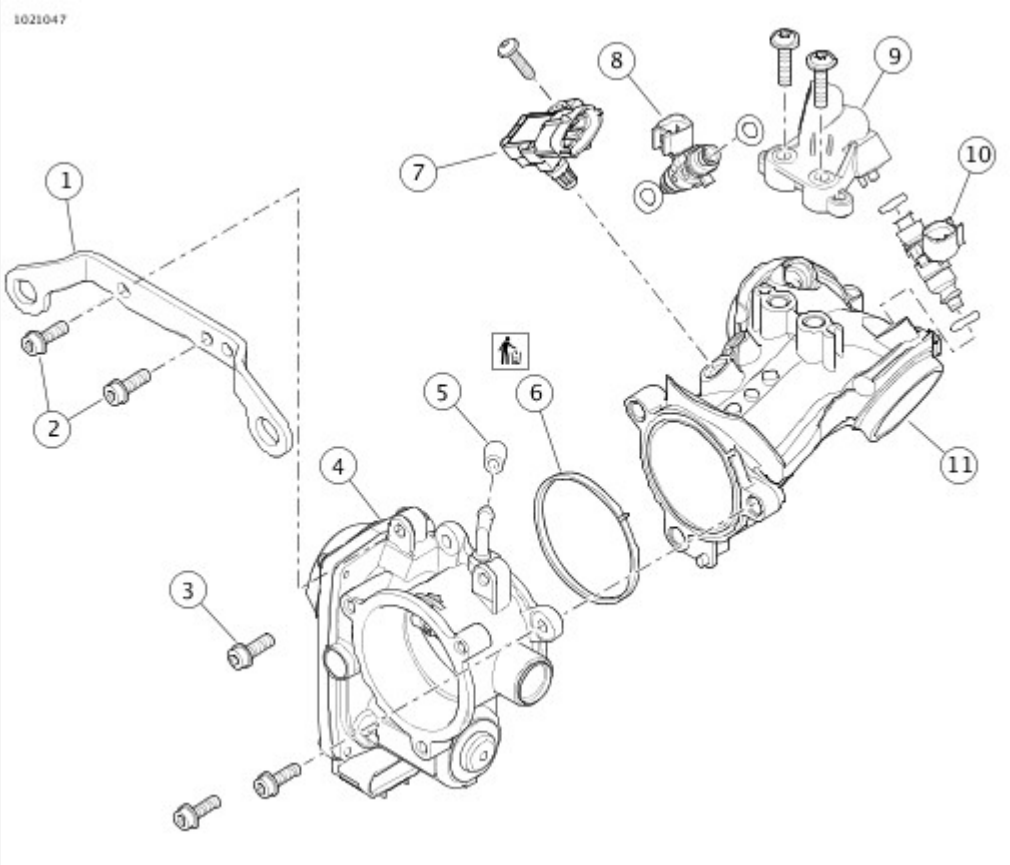

View interactive image

1	Bracket
2	Screw (2)
3	Screw (3)
4	Throttle body
5	Rubber cap
6	Gasket
7	TMAP sensor
8	Rear fuel injector
9	Fuel rail
10	Front fuel injector
11	Intake manifold

Figure 1. Induction Module Assembly

1. Install air cleaner backplate assembly. See **Fuel and Exhaust → AIR CLEANER BACKPLATE ASSEMBLY**.
2. Install air cleaner. See **Maintenance → INSPECT AIR FILTER**.
3. Install fuel tank. See **Fuel and Exhaust → FUEL TANK**.
4. Install seat. See **Chassis → SEAT**.
5. Install main fuse. See **Electrical → POWER DISCONNECT**.

Special Tools

Description	Part Number	Qty.
PROPANE ENRICHMENT KIT	HD-41417	1

WARNING

Do not allow open flame or sparks near propane. Propane is extremely flammable, which could cause death or serious injury. (00521b)

WARNING

Read and follow warnings and directions on propane bottle. Failure to follow warnings and directions can result in death or serious injury. (00471b)

Parts List

- Small propane cylinder.
- PROPANE ENRICHMENT KIT (Part Number:HD-41417).

Tester Assembly

1. See Fuel and Exhaust → INTAKE LEAK TEST → Procedure → Leak Tester. Make sure valve knob (6) is closed (fully clockwise).
2. Install valve assembly (5) onto propane bottle (1).

Tester Adjustment

1. See Fuel and Exhaust → INTAKE LEAK TEST → Procedure → Leak Tester. Press and hold trigger button (8).
2. Slowly open valve knob (6) until pellet in flow gauge (7) rises 5-10 SCFH on gauge.
3. Release trigger button.

NOTE

Propane injected into air cleaner causes false readings. Keep air cleaner cover installed.

1. Run motorcycle until engine is at normal operating temperature.
2. Aim nozzle toward possible sources of leak.

NOTE

The tone of the engine changes when propane enters source of leak.

3. Press and release trigger button to dispense propane.
4. Repeat as necessary to detect leak.
5. When test is finished, close valve.

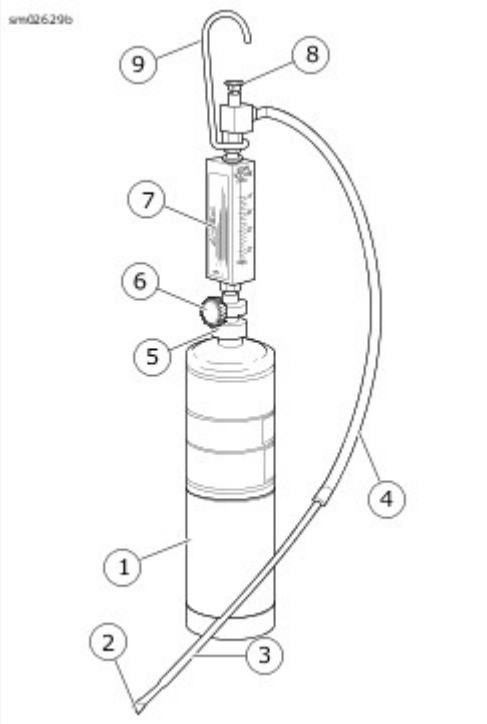

View interactive image

1	Propane bottle
2	Nozzle
3	Copper tube
4	Hose
5	Valve assembly
6	Valve knob
7	Flow gauge
8	Trigger button

9	Hanger

Figure 1. Leak Tester

1. Remove main fuse. See **Electrical → POWER DISCONNECT**.

NOTE
Right side cover removal only necessary if replacing rear **HO2S** (Heated oxygen sensor).

2. Remove right side cover. See **Chassis → RIGHT SIDE COVER**.

Special Tools

Description	Part Number	Qty.
OXYGEN SENSOR WRENCH	HD-50017	1

1. See **Fuel and Exhaust → HEATED OXYGEN SENSORS (HO2S) → Install → Front HO2S (Heated Oxygen Sensor)** or **Fuel and Exhaust → HEATED OXYGEN SENSORS (HO2S) → Install → Rear HO2S (Heated Oxygen Sensor)**. Disconnect **HO2S** (Heated oxygen sensor) connector (1).
2. Remove **HO2S** (2) with **OXYGEN SENSOR WRENCH (Part Number:HD-50017)**.

NOTE

- Do not install sensors that have dropped or have been impacted by other components. Damage to the sensing element can occur.
- Replacement sensor assemblies have threads coated with ANTI-SEIZE LUBRICANT and **new** gaskets.
- If reusing **HO2S** (Heated oxygen sensor), replace the gasket. Use a high-quality professional grade side cutter for gasket removal. Make sure larger side of **new** gasket faces exhaust.
- If reusing **HO2S**, apply a thin coat of ANTI-SEIZE LUBRICANT to each oxygen sensor.

1. See **Figure 1** or **Figure 2**. Install **HO2S** (2). Tighten.
   Torque: 16.3–19 N·m (12–14 ft-lbs) *HO2S (Heated oxygen sensor)*
2. Connect **HO2S** connector (1).

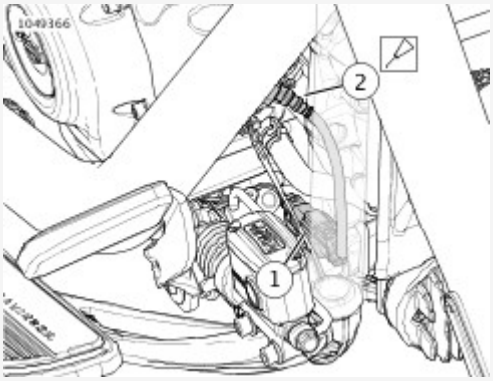

View interactive image

1	**HO2S** connector
2	**HO2S**

Figure 1. Front HO2S (Heated Oxygen Sensor)

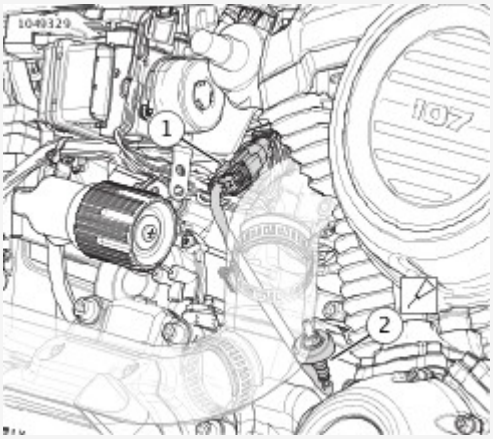

View interactive image

1	HO2S connector
2	HO2S

Figure 2. Rear HO2S (Heated Oxygen Sensor)

1. Install right side cover. See **Chassis → RIGHT SIDE COVER**.
2. Install main fuse. See **Electrical → POWER DISCONNECT**.

1. Remove exhaust shields as necessary. See **Fuel and Exhaust → EXHAUST SYSTEM**.

Muffler

1. See Fuel and Exhaust → MUFFLERS → Install → Muffler, Fuel and Exhaust → MUFFLERS → Install → Single Muffler or Fuel and Exhaust → MUFFLERS → Install → Single Muffler. Remove muffler.
   a. Discard clamp (4).
   b. Remove screws (1).
   c. Remove muffler (2).
   d. Discard muffler gasket (3), if equipped.
   e. **FXDRS:** Inspect isolator (6). Replace if necessary.

End Cap

1. See Fuel and Exhaust → MUFFLERS → Install → Muffler End Cap or Fuel and Exhaust → MUFFLERS → Install → Triangular Muffler End Cap. Remove end cap.
   a. Remove screws (1).
   b. Remove end cap (2).
   c. Remove end cap gasket (3), if equipped.

Consumables

Description	Part Number	Size
ANTI-SEIZE LUBRICANT	98960-97	29.6 ml (1 fl oz)

Muffler

1. **NOTE**

   Use a pipe expander (such as Snap-on Part No. PH300) on mufflers (2) to aid installation of gaskets (3), if necessary.

   Triangle muffler does not use a gasket.

   See Figure 1 or Figure 2. Install **new** gasket into muffler, if removed.
2. See Figure 1 , Figure 2 or Figure 3 Install muffler.
   a. Loosely install **new** clamp (4).
   b. **FXDRS:** Align pin (5) with isolator (6). Slide muffler on.
   c. **All others:** Align muffler with bracket. Slide muffler on.
   d. Install screws (1). Hand-tighten.
   e. Tighten screws.
   Torque: 13.5–16.3 N·m (119–144 **in-lbs**) *Muffler screws*
   f. Tighten clamp.
   Torque: 51.5–58.3 N·m (38–43 ft-lbs) *Muffler clamp*

End Cap

1. See Figure 4 or Figure 5. Install end cap.
   a. Apply anti-seize lubricant to screws (1).
   ANTI-SEIZE LUBRICANT (98960-97)
   b. **FXDRS:** Install end cap gasket (3).
   c. **FXDRS:** Install end cap support (4).
   d. Install end cap (2).
   e. Install screws. Tighten.
   Torque: 8.8–10.8 N·m (78–96 **in-lbs**) *Muffler end cap screws*

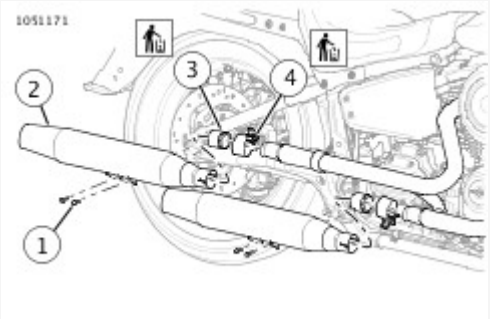

View interactive image

1	Screw (2)
2	Muffler
3	Gasket
4	Clamp

Figure 1. Muffler

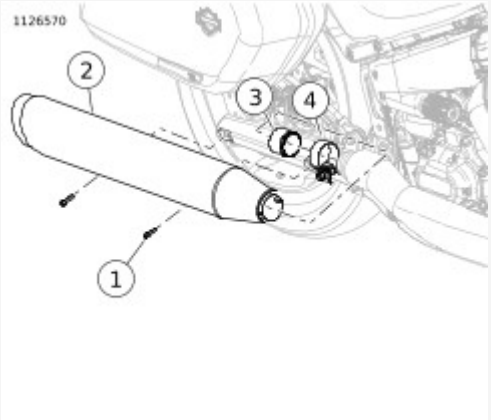

View interactive image

1	Screw (2)
2	Muffler
3	Gasket
4	Clamp

Figure 2. Single Muffler

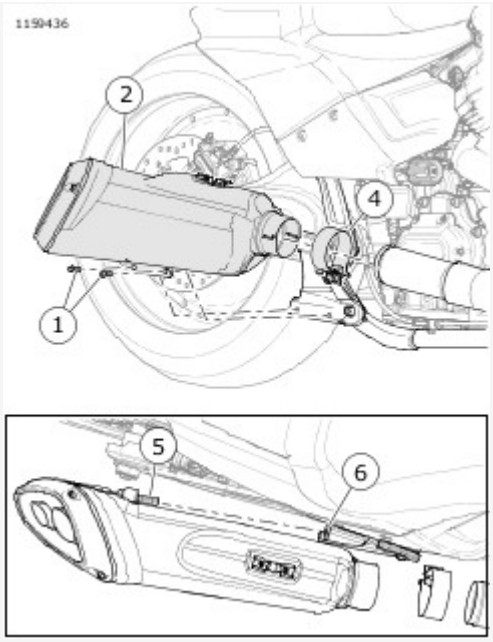

View interactive image

1	Screw (2)
2	Muffler
4	Clamp
5	Alignment pin
6	Isolator

Figure 3. Single Muffler

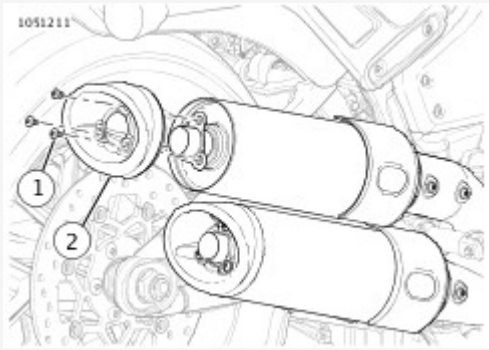

View interactive image

1	Screw (3)
2	Muffler end cap

Figure 4. Muffler End Cap

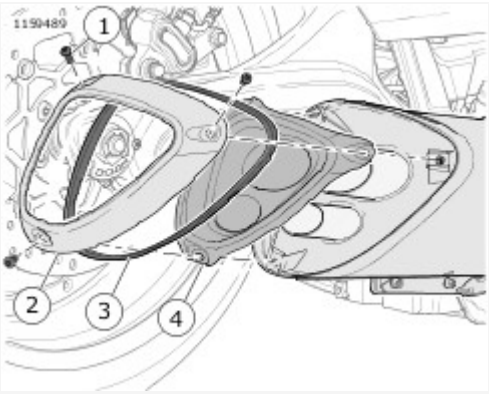

View interactive image

1	Screw (3)
2	Muffler end cap
3	Muffler end cap gasket
4	Muffler end cap support

Figure 5. Triangular Muffler End Cap

1. Install exhaust shields as necessary. See **Fuel and Exhaust → EXHAUST SYSTEM**.

1. Remove main fuse. See **Electrical → POWER DISCONNECT**.
2. If necessary remove right foot support bracket. See **Chassis → RIGHT FOOT CONTROLS**.
3. Disconnect front and rear **HO2S** (Heated oxygen sensor) connectors. See **Fuel and Exhaust → HEATED OXYGEN SENSORS (HO2S)**.

1. See **Fuel and Exhaust → EXHAUST SYSTEM → Install → Exhaust System (Typical)** or **Fuel and Exhaust → EXHAUST SYSTEM → Install → Exhaust System (Two Into One)**.
   Remove exhaust system.
   a. Remove flange nuts (5).
   b. **FLDE,FLHC,FLHCS:** Remove support clamp screw (4).
   c. Remove muffler screws (1).
   d. Remove exhaust system.
2. Remove and discard gaskets (6).
3. If necessary remove exhaust bracket.
   a. Remove exhaust bracket screws (3).
   b. Remove exhaust bracket (2).

Consumables

Description	Part Number	Size
LOCTITE 243 MEDIUM STRENGTH THREADLOCKER AND SEALANT (BLUE)	99642-97	6 ml (¼ fl oz)

1. See Figure 1 or Figure 2. If removed install exhaust bracket.
   a. Install exhaust bracket (2).
   b. Apply thread-locker to exhaust bracket screws (3). LOCTITE 243 MEDIUM STRENGTH THREADLOCKER AND SEALANT (BLUE) (99642-97)
   c. Install exhaust bracket screws (3). Tighten.
      Torque: 54.2–67.8 N·m (40–50 ft-lbs) *Exhaust bracket screws*
2. Install **new** gaskets (6).
3. Install exhaust system.
   a. Align and install exhaust system.

      NOTE

      FXDRS: Alignment pin (7) must engage isolator on exhaust bracket.

   b. Apply thread-locker to muffler screws (1). LOCTITE 243 MEDIUM STRENGTH THREADLOCKER AND SEALANT (BLUE) (99642-97)
   c. Install muffler screws. Hand tighten.
   d. **FLDE,FLHC,FLHCS:** Install support clamp screw (4). Hand tighten.
   e. Install flange nuts (5). Hand tighten.
   f. Tighten flange nuts.
      Torque: 11.3–13.6 N·m (100–120 **in-lbs**) *Exhaust to engine flange nuts*
   g. Tighten muffler screws.
      Torque: 13.6–16.3 N·m (120–144 **in-lbs**) *Muffler screws*
   h. **FLDE,FLHC,FLHCS:** Tighten support clamp screw.
      Torque: 54.2–67.8 N·m (40–50 ft-lbs) *Exhaust support clamp screw*

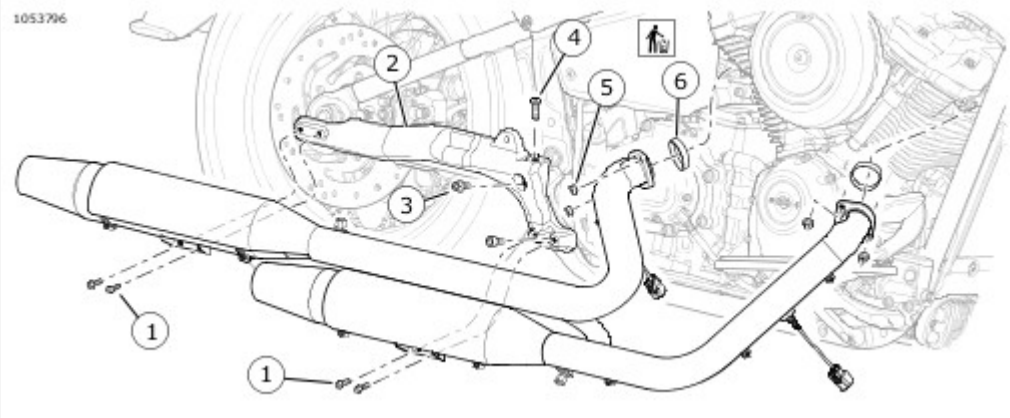

View interactive image

1	Muffler screw (4)
2	Exhaust bracket
3	Exhaust bracket screw (2)
4	Support clamp screw
5	Flange nut (4)
6	Gasket (2)

Figure 1. Exhaust System (Typical)

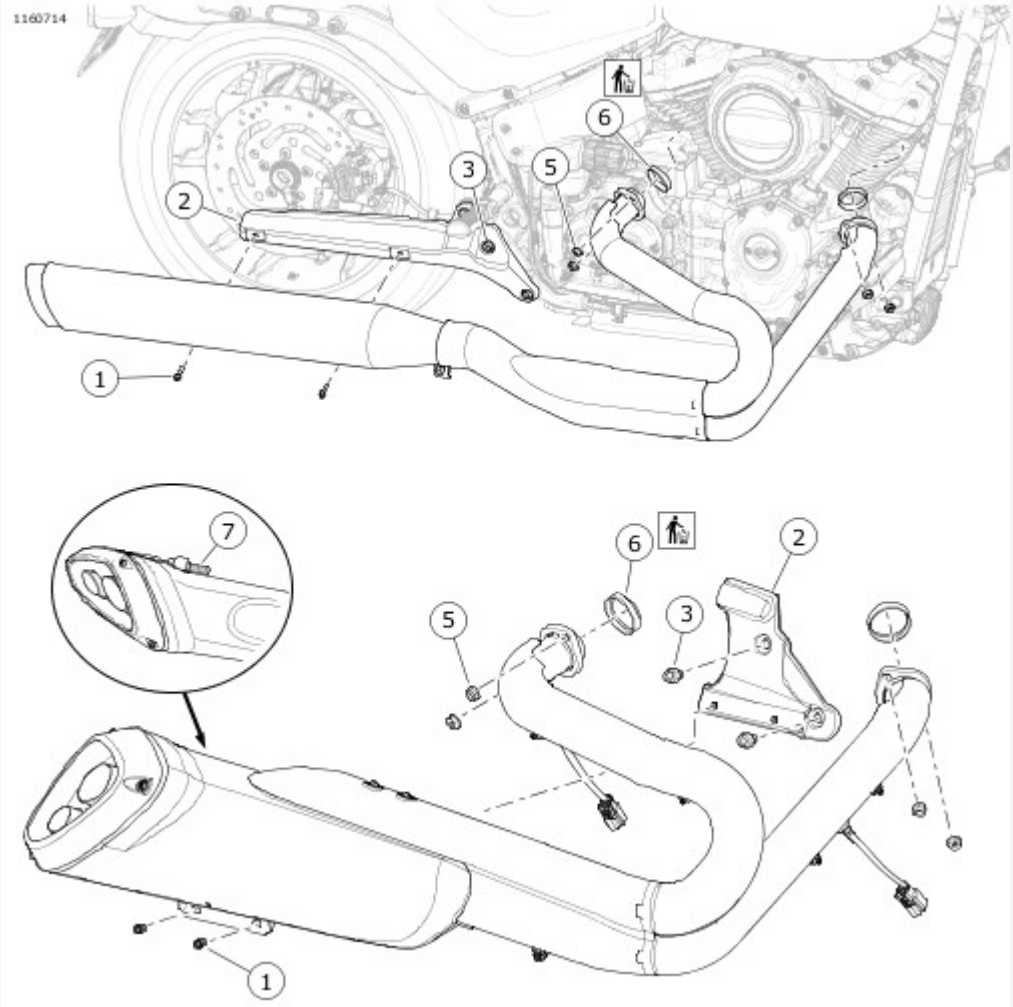

View interactive image

1	Muffler screw (2)
2	Exhaust bracket
3	Exhaust bracket screw (2)
5	Flange nut (4)
6	Gasket (2)
7	FXDRS: Alignment pin

Figure 2. Exhaust System (Two Into One)

Disassemble

1. See Figure 1. Remove HO2S (Heated oxygen sensor) (6). See Fuel and Exhaust → HEATED OXYGEN SENSORS (HO2S).
2. Remove exhaust and muffler shields.
   a. Remove exhaust and muffler shield clamps (1, 8).
   b. Remove exhaust and muffler shields (3, 7, 9, 10).
3. Remove muffler (2). See Fuel and Exhaust → MUFFLERS.
4. Remove exhaust flange.
   a. Remove retaining ring (4).
   b. Remove exhaust flange (5).

Assemble

1. **NOTE**

   Recess in exhaust flange should face engine.

   See Figure 1. Install exhaust flange.
   a. Install exhaust flange (5).
   b. Install Retaining ring (4).
2. Install muffler (2). See Fuel and Exhaust → MUFFLERS.
3. Install exhaust and muffler shields.
   a. Install and position exhaust and muffler shields (3, 7, 9, 10).
   b. Install exhaust shield clamps (8). Tighten.
      Torque: 2.3–4.5 N·m (20–40 **in-lbs**) *Exhaust shield clamps*
   c. Install muffler shield clamps (1). Tighten.
      Torque: 2.3–4.5 N·m (20–40 **in-lbs**) *Muffler shield clamps*
4. Install HO2S (6). See Fuel and Exhaust → HEATED OXYGEN SENSORS (HO2S).

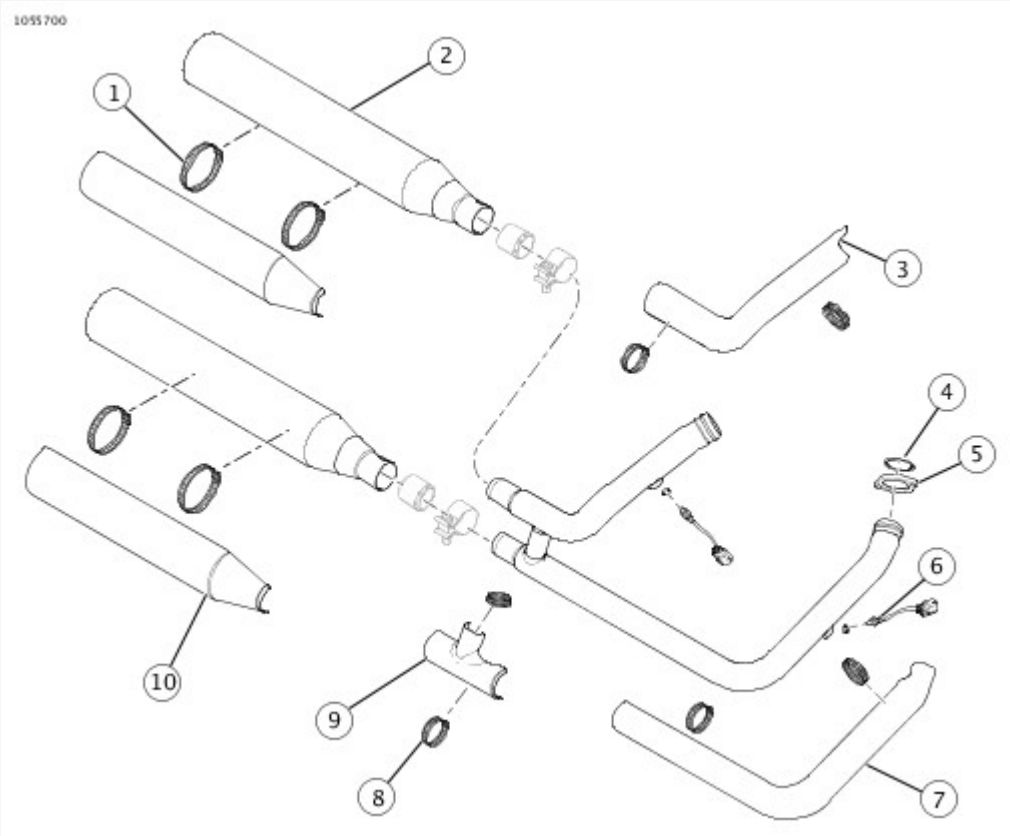

View interactive image

1	Muffler shield clamp (4)
2	Muffler (2)
3	Rear exhaust shield
4	Retaining ring (2)
5	Exhaust flange (2)
6	HO2S (Heated oxygen sensor) (2)
7	Front exhaust shield
8	Exhaust shield clamp (6)
9	Intermediate exhaust shield (FXBB, FLSL, FXLR)
10	Muffler shield (2)

Figure 1. Exhaust System (Typical)

Consumables

Description	Part Number	Size
ANTI-SEIZE LUBRICANT	98960-97	29.6 ml (1 fl oz)

Disassemble

1. See Figure 1. Remove HO2S (Heated oxygen sensor) (4). See Fuel and Exhaust → HEATED OXYGEN SENSORS (HO2S).
2. Remove intermediate exhaust shield.
   a. Remove screws (7).
   b. Remove intermediate exhaust shield (8).
3. Remove front exhaust shield, rear exhaust shield, and muffler shields.
   a. Remove exhaust and muffler shield clamps (6, 11).
   b. Remove exhaust shields (5, 9, 10).
4. Remove muffler (1). See Fuel and Exhaust → MUFFLERS.
5. Remove exhaust flange.
   a. Remove retaining ring (2).
   b. Remove exhaust flange (3).

Assemble

1. See Figure 1. Install exhaust flange.

   NOTE

   Recess in exhaust flange should face engine.

   a. Install exhaust flange (3).
   b. Install Retaining ring (2).
2. Install muffler (1). See Fuel and Exhaust → MUFFLERS.
3. Install front exhaust shield, rear exhaust shield, and muffler shields.
   a. Install and position muffler and exhaust shields (5, 9, 10).
   b. Install muffler and exhaust shield clamps (6, 11). Hand tighten.
4. Install intermediate exhaust shield.
   a. Apply anti-seize lubricant to screws (7).
      ANTI-SEIZE LUBRICANT (98960-97)
   b. Install intermediate exhaust shield (8).
   c. Install screws (7). Tighten.
      Torque: 12.2–14.9 N·m (108–132 **in-lbs**) *Exhaust shield screws*
5. Tighten muffler and exhaust shield clamps.
   Torque: 2.3–4.5 N·m (20–40 **in-lbs**) *Exhaust shield clamps*
6. Install HO2S (4). See Fuel and Exhaust → HEATED OXYGEN SENSORS (HO2S).

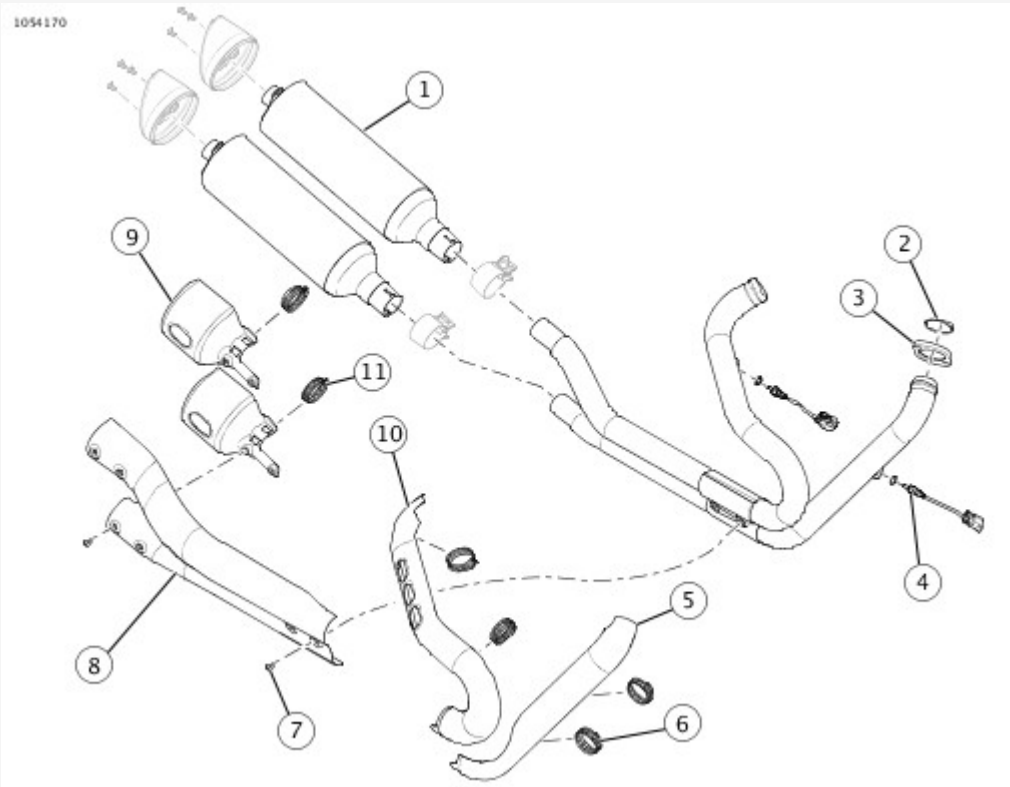

View interactive image

1	Muffler (2)
2	Retaining ring (2)
3	Exhaust flange (2)
4	HO2S (Heated oxygen sensor) (2)
5	Front exhaust shield
6	Exhaust shield clamp (4)
7	Screw (6)
8	Intermediate exhaust shield
9	Muffler shield (2)
10	Rear exhaust shield
11	Muffler shield clamp (2)

Figure 1. Exhaust System: FXFB, FXFBS

Consumables

Description	Part Number	Size
ANTI-SEIZE LUBRICANT	98960-97	29.6 ml (1 fl oz)

Disassemble

1. See Figure 1. Remove HO2S (Heated oxygen sensor) (Heated oxygen sensor) (6). See Fuel and Exhaust → HEATED OXYGEN SENSORS (HO2S).
2. Remove intermediate exhaust shield.
   a. Remove rear clamp (11) or screws (15).
   b. Remove front clamps (10) or clamp (16).
   c. Remove intermediate exhaust shield (9 or 17).
3. Remove front exhaust shield and rear exhaust shield.
   a. Remove clamps (3).
   b. Remove shields (2, 8).
4. Remove muffler shield, if equipped.
   a. Remove clamps (12).
   b. Remove muffler shield (13).
5. Remove muffler (1). See Fuel and Exhaust → MUFFLERS
6. Remove exhaust flanges.
   a. Remove retaining rings (5).
   b. Remove exhaust flanges (4).

Assemble

1. **NOTE**

   Recess in exhaust flange should face engine.

   See Figure 1. Install exhaust flanges.
   a. Install exhaust flanges (4).
   b. Install Retaining rings (5).
2. Install muffler (1). See Fuel and Exhaust → MUFFLERS.
3. Install muffler shield, if equipped.
   a. Place muffler shield in position.
   b. Install clamps (12). Hand tighten.
4. Install front exhaust shield, rear exhaust shield.
   a. Place muffler and exhaust shields (2, 8) in position.
   b. Install clamps (3). Hand tighten.
5. Install intermediate exhaust shield.
   a. Apply anti-seize lubricant to screws (14).
   ANTI-SEIZE LUBRICANT (98960-97)

b. Place intermediate exhaust shield (9 or 17) in position.

c. Install exhaust shield rear clamp (11) or screws (14). Hand tighten clamp or tighten screws.
Torque: 12.2–14.9 N·m (108–132 **in-lbs**) *Muffler intermediate exhaust shield screw*

d. Install exhaust shield front clamps (10) or clamps (16).

6. Tighten muffler and exhaust shield clamps.
Torque: 8.8–10.8 N·m (78–96 **in-lbs**) *Exhaust shield clamps*

7. Install **HO2S** (6). See **Fuel and Exhaust → HEATED OXYGEN SENSORS (HO2S)**.

1	FLSB: Muffler
2	Rear exhaust Shield
3	Exhaust shield clamp (4)
4	Exhaust flange (2)
5	Retaining ring (2)
6	HO2S (Heated oxygen sensor) (2)
7	Header assembly
8	Front exhaust shield
9	FLSB: Intermediate exhaust shield
10	Intermediate exhaust shield front clamp (2)
11	Intermediate exhaust shield rear clamp
12	Muffler shield clamp (2)
13	Muffler shield
14	FXDRS: Muffler
15	Screw (2)
16	Intermediate exhaust shield clamp
17	FXDRS: Intermediate exhaust shield

Figure 1. Exhaust System (Two Into One)

1. Connect front and rear **HO2S** (Heated oxygen sensor) connectors. See **Fuel and Exhaust → HEATED OXYGEN SENSORS (HO2S)**.
2. If removed install right foot support bracket. See **Chassis → RIGHT FOOT CONTROLS**.
3. Install main fuse. See **Electrical → POWER DISCONNECT**.

1. Remove main fuse. See **Electrical → POWER DISCONNECT**.
2. Remove right side cover. See **Chassis → RIGHT SIDE COVER**.
3. Remove battery. See **Maintenance → INSPECT BATTERY**.
4. Remove battery tray. See **Electrical → BATTERY TRAY**.

1. See **Fuel and Exhaust → PURGE SOLENOID: CALIFORNIA EMISSIONS → Install → Purge Solenoid**. Remove purge solenoid.
    a. Disconnect purge solenoid connector (2).
    b. Remove solenoid-to-induction module and canister-to-solenoid lines (3, 4) from purge solenoid (1).
    c. Remove purge solenoid.

1. See **Figure 1**. Install purge solenoid.
    a. Install purge solenoid (1).
    b. Install solenoid-to-induction module and canister-to-solenoid lines (3, 4).
    c. Connect purge solenoid connector (2).

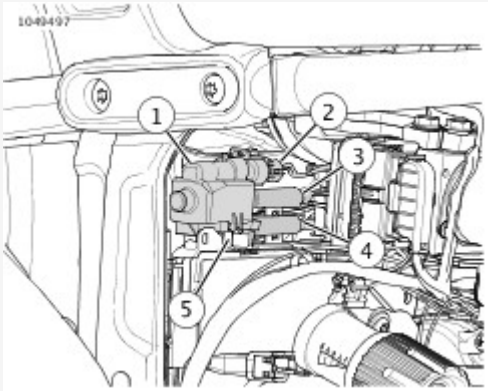

View interactive image

1	Purge solenoid
2	Purge solenoid connector
3	Solenoid-to-induction module line
4	Canister-to-solenoid line
5	BCM caddy

Figure 1. Purge Solenoid

1. Install battery tray. See **Electrical → BATTERY TRAY**.
2. Install battery. See **Maintenance → INSPECT BATTERY**.
3. Install right side cover. See **Chassis → RIGHT SIDE COVER**.
4. Install main fuse. See **Electrical → POWER DISCONNECT**.

1. See **Fuel and Exhaust → CHARCOAL CANISTER: CALIFORNIA EMISSIONS → Install → Charcoal Canister**. Remove charcoal canister and bracket assembly.
    a. Remove lines (4, 5) from charcoal canister.
    b. Remove screws (3).
    c. Remove charcoal canister (1) and bracket (2).

NOTE

If charcoal canister is removed from bracket, a new charcoal canister and screws are required for installation.

2. If necessary, remove charcoal canister from bracket.
    a. Remove and discard screws (6).
    b. Discard charcoal canister.

1. See **Figure 1**. If removed, install charcoal canister to bracket.
   a. Install **new** charcoal canister (1) onto bracket (2).
   b. Install **new** screws (6). Tighten.
      Torque: 3.4–4.1 N·m (30–36 **in-lbs**) *Charcoal canister to bracket screws*
2. Install charcoal canister and bracket assembly.
   a. Install charcoal canister and bracket assembly
   b. Install screws (3). Tighten.
      Torque: 8.1–10.8 N·m (72–96 **in-lbs**) *Charcoal canister bracket to engine case screws*
   c. Install lines (4,5).

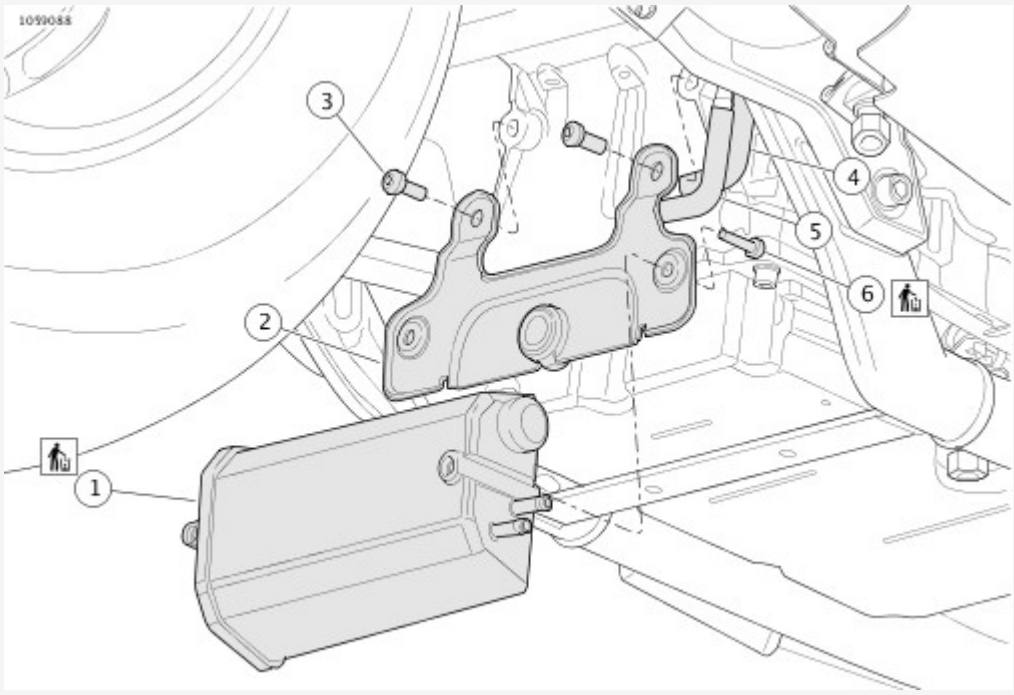

View interactive image

1	Charcoal canister
2	Bracket
3	Screw (2)
4	Canister-to-solenoid line
5	Vapor valve-to-canister line
6	screw (2)

Figure 1. Charcoal Canister

1. Remove right side cover. See **Chassis → RIGHT SIDE COVER**.
2. Remove main fuse. See **Electrical → POWER DISCONNECT**.
3. Remove battery. See **Maintenance → INSPECT BATTERY**.
4. Remove battery tray. See **Electrical → BATTERY TRAY**.

NOTE

Air cleaner removal and lifting rear of fuel tank is only necessary for replacing purge solenoid to induction module line.

5. Remove air cleaner. See **Maintenance → INSPECT AIR FILTER**.
6. Remove air cleaner backplate assembly. See **Fuel and Exhaust → AIR CLEANER BACKPLATE ASSEMBLY**.
7. Lift rear of fuel tank. See **Fuel and Exhaust → PURGE FUEL LINE**.

1. Remove vapor valve-to-canister line.
    a. See **Fuel and Exhaust → PURGE LINES: CALIFORNIA EMISSIONS → Install → Purge Lines**. Disconnect vapor valve-to-canister line (4) from vapor valve (5).
    b. See **Fuel and Exhaust → PURGE LINES: CALIFORNIA EMISSIONS → Install → Purge Lines at Canister**. Disconnect vapor valve-to-canister line (2) from charcoal canister (3).
    c. Remove vapor valve-to-canister line.
2. Remove canister-to-solenoid line.
    a. Disconnect canister-to-solenoid line (1) from charcoal canister (3).
    b. See **Fuel and Exhaust → PURGE LINES: CALIFORNIA EMISSIONS → Install → Purge Lines**. Disconnect canister-to-solenoid line (1) from purge solenoid (2).
3. Remove solenoid-to-induction module line.
    a. Remove solenoid-to-induction module line (3) from purge solenoid (2).
    b. Remove solenoid-to-induction module line from induction module.

1. Install vapor valve-to-canister line.
    a. See **Figure 1**. Install vapor valve-to-canister line (4) to charcoal canister (3).
    b. See **Figure 2**. Install valve-to-canister line to vapor valve (5).
2. Install canister to solenoid line.
    a. See **Figure 1**. Install canister-to-solenoid line (1) to charcoal canister (3).
    b. See **Figure 2**. Install canister-to-solenoid line to purge solenoid (2).
3. Install solenoid-to-induction module line.
    a. Install solenoid-to-induction module line (3) to induction module.
    b. Install solenoid-to-induction module line to purge solenoid (2).

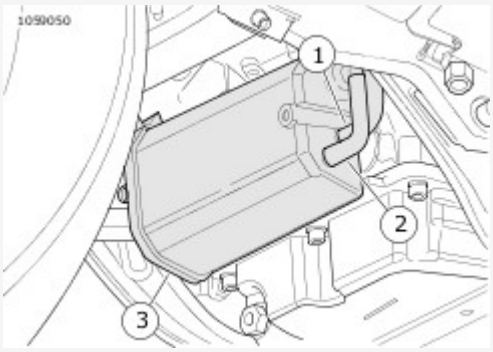

View interactive image

1	Canister-to-solenoid line
2	Vapor valve-to-canister line
3	Charcoal canister

Figure 1. Purge Lines at Canister

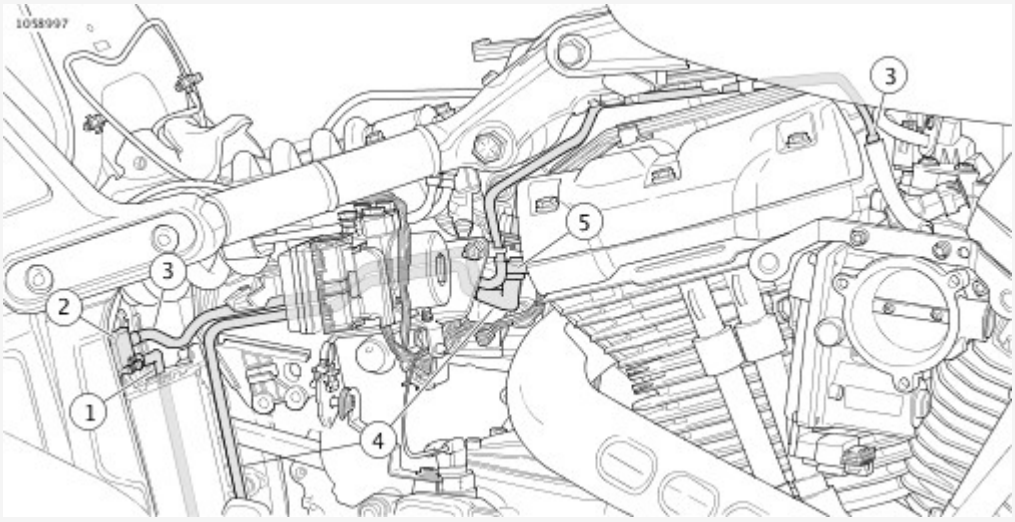

View interactive image

1	Canister-to-solenoid line
2	Purge solenoid

3	Solenoid-to-induction module line
4	Vapor valve-to-canister line
5	Vapor valve

Figure 2. Purge Lines

1. Secure fuel tank. See **Fuel and Exhaust → PURGE FUEL LINE**.
2. Install air cleaner backplate assembly. See **Fuel and Exhaust → AIR CLEANER BACKPLATE ASSEMBLY**.
3. Install air cleaner. See **Maintenance → INSPECT AIR FILTER**.
4. Install battery tray. See **Electrical → BATTERY TRAY**.
5. Install battery. See **Maintenance → INSPECT BATTERY**.
6. Install right side cover. See **Chassis → RIGHT SIDE COVER**.
7. Install main fuse. See **Electrical → POWER DISCONNECT**.

FASTENER	TORQUE VALUE	NOTES
ACR	23–26.4 N·m (17–19 ft-lbs)	7.39 AUTOMATIC COMPRESSION RELEASE (ACR), Install
Auxiliary lamp bezel nut	0.67–1.12 N·m (6–10 **in-lbs**)	7.22 AUXILIARY LAMPS, Bulb Replacement
Auxiliary lamp nut	20.3–24.4 N·m (15–18 ft-lbs)	7.22 AUXILIARY LAMPS, Remove and Install: Standard Lighting
Auxiliary lamp nut	20.3–24.4 N·m (15–18 ft-lbs)	7.22 AUXILIARY LAMPS, Remove and Install: Integrated LED Lighting
Auxiliary lamp nut (FLDE)	20.3–24.4 N·m (15–18 ft-lbs)	7.22 AUXILIARY LAMPS, Adjust
Auxiliary lamp nut (FLHC)	25.7–31.1 N·m (19–23 ft-lbs)	7.22 AUXILIARY LAMPS, Adjust
Battery tray screw	8.1–12.2 N·m (6–9 ft-lbs)	7.49 BATTERY TRAY, Install
Battery, negative cable, screw	8.1–10.8 N·m (72–96 **in-lbs**)	7.4 POWER DISCONNECT, Negative Battery Cable
Brake line clamp screw	4.1–5.4 N·m (36–48 **in-lbs**)	7.11 LEFT HAND CONTROL MODULE (LHCM), Install
Brake line clamp screw	4.1–5.4 N·m (36–48 **in-lbs**)	7.12 RIGHT HAND CONTROL MODULE (RHCM), Install
Brake line clamp screw	4.1–5.4 N·m (36–48 **in-lbs**)	7.44 FRONT ELECTRICAL CADDY, Install
Brake line clamp screw	4.1–5.4 N·m (36–48 **in-lbs**)	7.52 BACKBONE WIRE HARNESS, Install
Cover, under seat frame, large screw	10.9–13.6 N·m (96–120 **in-lbs**)	7.52 BACKBONE WIRE HARNESS, Install
Cover, under seat frame, small screw	2.3–3.4 N·m (20–30 **in-lbs**)	7.52 BACKBONE WIRE HARNESS, Install
ECM caddy large screw	4.1–6.8 N·m (36–60 **in-lbs**)	7.46 ECM CADDY, Install
ECM caddy small screw	6.2–6.8 N·m (55–60 **in-lbs**)	7.46 ECM CADDY, Install
ET sensor	14.9–21.2 N·m (11–16 ft-lbs)	7.37 ENGINE TEMPERATURE (ET) SENSOR, Install
Fender Support, Screw	57–62 N·m (42–46 ft-lbs)	7.24 REAR TURN SIGNAL LAMPS, Remove and Install: Fender Mount
Fender Support, Screw	57–62.3 N·m (42–46 ft-lbs)	7.27 LICENSE PLATE LAMP, Remove and Install: Side Mount

Fender Support, Screw	28–37 N·m (21–27 ft-lbs)	7.27 LICENSE PLATE LAMP, Remove and Install: Side Mount
Frame ground stud nut	5.7–10.2 N·m (50–90 **in-lbs**)	7.46 ECM CADDY, Install
Frame ground stud nut	5.6–10.2 N·m (50–90 **in-lbs**)	7.50 ENGINE GROUND CABLE, Install
Frame ground stud nut	5.6–10.2 N·m (50–90 **in-lbs**)	7.53 MAIN WIRE HARNESS, Install
Front light bar mounting screw	27.1–33.9 N·m (20–25 ft-lbs)	7.21 FRONT LIGHT BAR, Remove and Install: Standard Lighting
Front light bar mounting screw	27.1–33.9 N·m (20–25 ft-lbs)	7.21 FRONT LIGHT BAR, Remove and Install: Integrated LED Lighting
Front light bar, bracket screw	21.7–27.1 N·m (16–20 ft-lbs)	7.21 FRONT LIGHT BAR, Remove and Install: Standard Lighting
Front light bar, clamp screw	0.67–1.1 N·m (6–10 **in-lbs**)	7.21 FRONT LIGHT BAR, Remove and Install: Standard Lighting
Handlebar switch assembly retainer screws	0.9–1.1 N·m (8–10 **in-lbs**)	7.11 LEFT HAND CONTROL MODULE (LHCM), Install
Handlebar switch assembly retainer screws	0.9–1.1 N·m (8–10 **in-lbs**)	7.11 LEFT HAND CONTROL MODULE (LHCM), Clutch Switch Replacement
Handlebar switch assembly retainer screws	0.9–1.1 N·m (8–10 **in-lbs**)	7.12 RIGHT HAND CONTROL MODULE (RHCM), Install
Handlebar switch assembly retainer screws	0.9–1.1 N·m (8–10 **in-lbs**)	7.12 RIGHT HAND CONTROL MODULE (RHCM), Front Brake Switch Replacement
Handlebar switch housing screws	4–5.1 N·m (35–45 **in-lbs**)	7.11 LEFT HAND CONTROL MODULE (LHCM), Install
Handlebar switch housing screws	4–5.1 N·m (35–45 **in-lbs**)	7.12 RIGHT HAND CONTROL MODULE (RHCM), Install
Handlebar-mounted turn signal, ball stud locknut	5.6–7.9 N·m (50–70 **in-lbs**)	7.23 FRONT TURN SIGNAL LAMPS, Remove and Install: Handlebar Mount
Handlebar-mounted turn signal, ball stud set screw	4–6.7 N·m (3–5 ft-lbs)	7.23 FRONT TURN SIGNAL LAMPS, Remove and Install: Handlebar Mount
Headlamp (Oblong) mounting screw	13.5–17.6 N·m (10–13 ft-lbs)	7.19 HEADLAMP, Bulb Replacement: Oblong
Headlamp FLDE, FLHC, FLSB horizontal adjustment screw	25–40.6 N·m (18–30 ft-lbs)	7.19 HEADLAMP, Adjust
Headlamp FLDE, FLHC, FLSL, FXBB, FXLR, FLSB vertical adjustment screw	36.6–43.3 N·m (27–32 ft-lbs)	7.19 HEADLAMP, Adjust

Headlamp FXBB, FXLR horizontal adjustment screw	29.8–37.9 N·m (22–28 ft-lbs)	7.19 HEADLAMP, Adjust
Headlamp FXBR/S vertical adjustment screw	13.5–17.6 N·m (10–13 ft-lbs)	7.19 HEADLAMP, Adjust
Headlamp FXFB/S vertical adjustment screw	14.9–19 N·m (11–14 ft-lbs)	7.19 HEADLAMP, Adjust
Headlamp bezel screw	1–1.6 N·m (9–14 **in-lbs**)	7.19 HEADLAMP, Bulb Replacement: Standard Round
Headlamp ground strap screw	8.8–10.8 N·m (6.5–8.0 ft-lbs)	7.19 HEADLAMP, Bulb Replacement: Nacelle Mounted
Headlamp isolator bracket screw	8.8–10.8 N·m (6.5–8.0 ft-lbs)	7.19 HEADLAMP, Bulb Replacement: Standard Round
Headlamp mounting ring screw	21.6–27.1 N·m (16–20 ft-lbs)	7.19 HEADLAMP, Remove and Install: Nacelle Mounted
Headlamp nacelle, screw	21.6–27.1 N·m (16–20 ft-lbs)	7.19 HEADLAMP, Remove and Install: Horizontal
Headlamp retainer screw	2–2.5 N·m (18–22 **in-lbs**)	7.19 HEADLAMP, Bulb Replacement: Standard Round
Headlamp, nacelle mounted, bezel screw	2.8–3.6 N·m (25–32 **in-lbs**)	7.19 HEADLAMP, Bulb Replacement: Nacelle Mounted
Headlamp, nacelle mounted, retainer screw	1.9–2.8 N·m (17–25 **in-lbs**)	7.19 HEADLAMP, Bulb Replacement: Nacelle Mounted
Headlamp, oblong, bracket-to-fork clamp screws	21.6–27.1 N·m (16–20 ft-lbs)	7.19 HEADLAMP, Remove and Install: Oblong
Headlamp, oblong, isolator screws	3.7–4.8 N·m (3–4 ft-lbs)	7.19 HEADLAMP, Remove and Install: Oblong
Headlamp, oblong, mounting screw	13.6–17.6 N·m (120–156 **in-lbs**)	7.19 HEADLAMP, Remove and Install: Oblong
Headlamp, round, locknut	36.6–43.3 N·m (27–32 ft-lbs)	7.19 HEADLAMP, Remove and Install: Standard Round
Headlamp, upper triple clamp mounted, screw	15–19 N·m (11–14 ft-lbs)	7.19 HEADLAMP, Remove and Install: Horizontal
Horn, Bracket Screw	7–8 N·m (5–6 ft-lbs)	7.18 HORN, Assemble
Horn, Narrow Mounting Screw	3–3.7 N·m (27–33 **in-lbs**)	7.18 HORN, Install
Horn, Wide Mounting Screw	9.4–12 N·m (7–9 ft-lbs)	7.18 HORN, Install
Housing to IM screw	2.3–2.8 N·m (20–25 **in-lbs**)	7.13 INSTRUMENT MODULE (IM), Remove and Install: Console Without

		Panel
IM panel screws (FXDRS)	1.4–1.9 N·m (12–17 **in-lbs**)	7.13 INSTRUMENT MODULE (IM), Remove and Install: Light Bracket Mount
IM screw	1.1–2.3 N·m (10–20 **in-lbs**)	7.13 INSTRUMENT MODULE (IM), Remove and Install: Dual Instrument
IM screws (FXDRS)	1.4–1.9 N·m (12–17 **in-lbs**)	7.13 INSTRUMENT MODULE (IM), Remove and Install: Light Bracket Mount
IM to upper clamp screw	1.4–1.9 N·m (12–17 **in-lbs**)	7.13 INSTRUMENT MODULE (IM), Remove and Install: Handlebar Mount
Ignition coil, screw	15–19 N·m (11–14 ft-lbs)	7.9 IGNITION COIL, Install
Indicator lamp, screw	2.26–3.39 N·m (20–30 **in-lbs**)	7.15 INDICATOR LAMPS, Install
JSS screw	2.3–2.8 N·m (20–25 **in-lbs**)	7.43 JIFFY STAND SENSOR (JSS), Install
Knock sensor screw	17.6–23 N·m (13–17 ft-lbs)	7.38 KNOCK SENSOR (KS), Install
LED signal screw	2.25–3.2 N·m (20–28 **in-lbs**)	7.23 FRONT TURN SIGNAL LAMPS, Bulb Replacement
LED signal screw	2.5–2.9 N·m (22–26 **in-lbs**)	7.24 REAR TURN SIGNAL LAMPS, Bulb Replacement
LED signal screw	4.3–4.7 N·m (38–42 **in-lbs**)	7.24 REAR TURN SIGNAL LAMPS, Bulb Replacement
License Plate Lamp Cover, Screw	0.9–1.8 N·m (8–16 **in-lbs**)	7.27 LICENSE PLATE LAMP, Remove and Install: Side Mount
License plate holder, screw	6.8–9 N·m (60–80 **in-lbs**)	7.25 TAIL LAMP, Remove and Install: License Plate Bracket Mount
License plate holder, screw	9.5–15 N·m (84–133 **in-lbs**)	7.27 LICENSE PLATE LAMP, Remove and Install: License Plate Bracket Mount
License plate, LED housing, screw	1.1–2.3 N·m (10–20 **in-lbs**)	7.27 LICENSE PLATE LAMP, Remove and Install: License Plate Bracket Mount
License plate, center mount, lamp housing screw	1.1–2.25 N·m (10–20 **in-lbs**)	7.27 LICENSE PLATE LAMP, Bulb Replacement
License plate, center mount, lamp housing screw	1.1–2.25 N·m (10–20 **in-lbs**)	7.27 LICENSE PLATE LAMP, Remove and Install: Center Mount
License plate, center mount, tail lamp screw	1.1–2.25 N·m (10–20 **in-lbs**)	7.25 TAIL LAMP, Remove and Install: Center Mount

License plate, tail lamp, screw	1.1–2.3 N·m (10–20 **in-lbs**)	7.25 TAIL LAMP, Remove and Install: License Plate Bracket Mount
Lightbar, front, cover screw	2.25–3.2 N·m (20–28 **in-lbs**)	7.23 FRONT TURN SIGNAL LAMPS, Bulb Replacement
Lightbar, front, screw	27.1–33.9 N·m (20–25 ft-lbs)	7.23 FRONT TURN SIGNAL LAMPS, Bulb Replacement
Lighting assembly, rear, screws, large (FXDRS)	4.1–5.4 N·m (36–48 **in-lbs**)	7.24 REAR TURN SIGNAL LAMPS, Bulb Replacement
Lighting assembly, rear, screws, large (FXDRS)	2.7–3.8 N·m (24–34 **in-lbs**)	7.24 REAR TURN SIGNAL LAMPS, Remove and Install: Rear Lighting Assembly
Lighting assembly, rear, screws, medium (FXDRS)	2.7–5.4 N·m (24–48 **in-lbs**)	7.24 REAR TURN SIGNAL LAMPS, Remove and Install: Rear Lighting Assembly
Lighting assembly, rear, screws, small (FXDRS)	1.2–1.6 N·m (11–14 **in-lbs**)	7.24 REAR TURN SIGNAL LAMPS, Bulb Replacement
Lighting, Front, Bracket screws (FXDRS)	21.7–27.1 N·m (16–20 ft-lbs)	7.20 FRONT LIGHTING BRACKET, Install
Rear Turn Signal, Center Mount, Screw	20–24 N·m (15–18 ft-lbs)	7.24 REAR TURN SIGNAL LAMPS, Remove and Install: Center Mount
Rear Turn Signal, Fender Mount, Screw	20–24 N·m (15–18 ft-lbs)	7.24 REAR TURN SIGNAL LAMPS, Remove and Install: Fender Mount
Rear Turn Signal, Fender Mount, Screw	20–24 N·m (15–18 ft-lbs)	7.24 REAR TURN SIGNAL LAMPS, Remove and Install: Fender Mount
Rear Turn Signal, Fender Mount, Screw	20–24 N·m (15–18 ft-lbs)	7.27 LICENSE PLATE LAMP, Remove and Install: Side Mount
Rear Turn Signal, Fender Support, Screw	28–37 N·m (21–27 ft-lbs)	7.24 REAR TURN SIGNAL LAMPS, Remove and Install: Fender Mount
Rear Turn Signal, Light Bar Mount, Screw	22–27 N·m (16–20 ft-lbs)	7.24 REAR TURN SIGNAL LAMPS, Remove and Install: Light Bar Mount
Rear fork clamp screw (all but FXDRS)	2.7–4.1 N·m (24–36 **in-lbs**)	7.42 REAR WHEEL SPEED SENSOR (WSS), Remove and Install: Standard Fork
Rear lightbar bottom cover screw	5.4–5.9 N·m (48–52 **in-lbs**)	7.24 REAR TURN SIGNAL LAMPS, Bulb Replacement
Rear lightbar bottom cover screw	4.3–4.7 N·m (38–42 **in-lbs**)	7.24 REAR TURN SIGNAL LAMPS, Bulb Replacement
Rear stoplamp switch	16.3–20.3 N·m (12–15 ft-lbs)	7.26 REAR STOPLAMP SWITCH, Install
Sensor, CKP, screw	10.2–13.6 N·m	7.36 CRANKSHAFT POSITION SENSOR

	(90–120 **in-lbs**)	**(CKP), Install**
Sensor, vehicle speed, screw	11.3–13.6 N·m (100–120 **in-lbs**)	**7.40 VEHICLE SPEED SENSOR (VSS), Install**
Solenoid nut	7.9–11.8 N·m (70–104 **in-lbs**)	**7.5 STARTER, Install**
Starter, mounting screw	29.8–32.5 N·m (22–24 ft-lbs)	**7.5 STARTER, Install**
Stator mounting screws	6.2–8.5 N·m (55–75 **in-lbs**)	**7.6 ALTERNATOR, Install** *Always use new screws*
Sub caddy screw	4.1–6.8 N·m (36–60 **in-lbs**)	**7.29 ELECTRONIC CONTROL MODULE (ECM), Install**
Switch, Neutral Indicator	13.6–20.3 N·m (120–180 **in-lbs**)	**7.17 NEUTRAL INDICATOR SWITCH, Install**
Switch, Oil Pressure	17–23 N·m (13–17 ft-lbs)	**7.16 OIL PRESSURE SWITCH, Install**
Tail Lamp Lens Screw	2.3–2.7 N·m (20–24 **in-lbs**)	**7.25 TAIL LAMP, Bulb Replacement**
Tail Lamp, Standard, Base Screw	4.5–5.4 N·m (40–48 **in-lbs**)	**7.25 TAIL LAMP, Remove and Install: Standard**
Tail Lamp, Standard, Lens Screw	2.3–2.7 N·m (20–24 **in-lbs**)	**7.25 TAIL LAMP, Remove and Install: Standard**
Tail Lamp, Tombstone, Screw	11–14 N·m (8–10 ft-lbs)	**7.25 TAIL LAMP, Remove and Install: Tombstone**
Tail lamp bulb screw (FXDRS)	8.1–9.5 N·m (72–84 **in-lbs**)	**7.24 REAR TURN SIGNAL LAMPS, Bulb Replacement**
Tail lamp bulb screw (FXDRS)	8.1–9.5 N·m (72–84 **in-lbs**)	**7.24 REAR TURN SIGNAL LAMPS, Remove and Install: Rear Lighting Assembly**
Tail lamp lens screw	2.3–2.7 N·m (20–24 **in-lbs**)	**7.25 TAIL LAMP, Remove and Install: Standard**
Tail lamp, circuit board screw	4.5–5.4 N·m (40–48 **in-lbs**)	**7.25 TAIL LAMP, Remove and Install: Standard**
Transmission ground stud nut	8.1–10.9 N·m (72–96 **in-lbs**)	**7.50 ENGINE GROUND CABLE, Install**
Turn signal bulb screw, large (FXDRS)	2.7–3.8 N·m (24–34 **in-lbs**)	**7.24 REAR TURN SIGNAL LAMPS, Bulb Replacement**
Turn signal bulb screw, small (FXDRS)	1.2–1.6 N·m (11–14 **in-lbs**)	**7.24 REAR TURN SIGNAL LAMPS, Bulb Replacement**
Turn signal, front, bulb screws (FXDRS)	2.9–3.8 N·m (26–34 **in-lbs**)	**7.23 FRONT TURN SIGNAL LAMPS, Bulb Replacement**

Turn signal, front, housing screws (FXDRS)	1.2–1.6 N·m (11–14 **in-lbs**)	7.23 FRONT TURN SIGNAL LAMPS, Bulb Replacement
Turn signal, front, lamp screws (FXDRS)	2.7–3.4 N·m (24–30 **in-lbs**)	7.23 FRONT TURN SIGNAL LAMPS, Remove and Install: Front Lighting Bracket Mount
USB caddy screw	1.6–1.9 N·m (14–17 **in-lbs**)	7.45 USB CADDY, Assemble
Voltage regulator, screw	12–14 N·m (106–124 **in-lbs**)	7.7 VOLTAGE REGULATOR, Install
Wide mounting screw	12–15 N·m (106–133 **in-lbs**)	7.45 USB CADDY, Install
Wireform screw, headlamp, oblong,	13.5–16.2 N·m (10–12 ft-lbs)	7.19 HEADLAMP, Remove and Install: Oblong
tachometer screw	1.1–2.3 N·m (10–20 **in-lbs**)	7.14 TACHOMETER, Install

Table 1. Battery Specifications

BATTERY	SPECIFICATIONS
Size	12 V/ 17.5 Ah/315 CCA
Type	Sealed, **AGM** (Absorbed glass mat) battery

Table 2. Starter Specifications

STARTER	SPECIFICATIONS
Cranking current	250 A maximum
Free current	90 A maximum

Table 3. Alternator Specifications

ALTERNATOR	VALUE
Three phase	42 A system
AC voltage output	16-28 VAC per 1,000 rpm
Stator coil resistance	0.1–0.3 Ω

Table 4. Spark Plug Cables

LOCATION	LENGTH	RESISTANCE
Left front and rear	187–194 mm (7.36–7.64 in)	1,840–5,085 Ω
Right front and rear	381–387 mm (15.00–15.24 in)	3,750–10,070 Ω

Table 5. Regulator Specifications

REGULATOR	VALUE
Amperes @ 3,600 rpm	40–44 A
Voltage @ 3,600 rpm	14.1–14.5 V @ 24 °C (75.2 °F)

Table 6. Fuse Specifications

ITEM	RATING
Main	40 A
Battery	5 A
Battery tender	7.5 A

System	7.5 A

Table 7. Ignition Coil Specifications

WINDING	RESISTANCE
Primary resistance	0.2–0.5 Ω
Secondary resistance	5,500–8,000 Ω

Table 8. Spark Plug Cables

LOCATION	LENGTH	RESISTANCE
Left front and rear	187–194 mm (7.36–7.64 in)	1,840–5,085 Ω
Right front and rear	381–387 mm (15.00–15.24 in)	3,750–10,070 Ω

1. Remove left side cover. See **Chassis → LEFT SIDE COVER**.

Primary Fuses

1. Remove fuse block from **ECM** (Electronic control module) sub caddy.
2. Separate primary cover from system cover.
3. See **Electrical → FUSES → Install → Fuses**. Remove fuse cover (4).
4. Remove fuse (1, 2, 3 or 6).

System Fuse

1. Separate system cover from primary cover.
2. See **Electrical → FUSES → Install → Fuses**. Remove fuse cover (5).
3. Remove fuse (6).

See Figure 2 for proper amperage rating.

Primary Fuses

1. See Figure 1 and Figure 2. Install fuse (1, 2 or 3).
2. Install primary fuse cover (4).
3. Install fuse block onto ECM (Electronic control module) sub caddy.
4. Attach system cover (5) to primary cover

System Fuse

1. Install system fuse (6).
2. Install system fuse cover (5).
3. Attach system cover to primary cover (4).

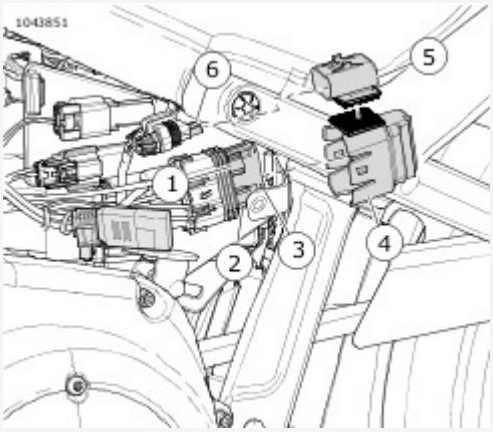

View interactive image

1	Fuse, battery tender
2	Fuse, battery
3	Fuse, main
4	Fuse cover, primary
5	Fuse cover, system
6	Fuse, system

Figure 1. Fuses

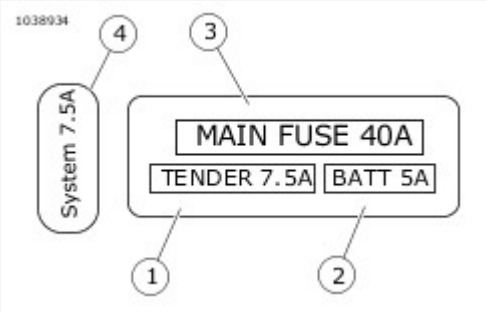

View interactive image

1	Battery tender
2	Battery
3	Main
4	System

Figure 2. Fuse Block

1. Install left side cover. See **Chassis → LEFT SIDE COVER**.

> **WARNING**
>
> Be sure that all lights and switches operate properly before operating motorcycle. Low visibility of rider can result in death or serious injury. (00316a)

2. Test affected circuit for proper operation.

Remove main fuse when there is a possibility of injury caused by accidental vehicle start-up or electrical equipment damage.

Remove Main Fuse

1. Remove left side cover. See **Chassis → LEFT SIDE COVER**.
2. **Models with security:**
   a. Verify that fob is present.
   b. Turn OFF/RUN switch to RUN.

> **WARNING**
>
> To prevent accidental vehicle start-up, which could cause death or serious injury, remove main fuse before proceeding. (00251b)

3. See **Figure 1**. Remove fuse cover (2).
   a. Remove fuse block from ECM (Electronic control module) sub caddy.
   b. Remove fuse cover.
4. Remove main fuse (1).
5. **Models with security:** Turn ignition switch OFF.

Install Main Fuse

1. See **Figure 1**. Install main fuse (1).
2. Install fuse cover (2).
3. Install fuse block onto ECM sub caddy.
4. Install left side cover. See **Chassis → LEFT SIDE COVER**.

> **WARNING**
>
> Be sure that all lights and switches operate properly before operating motorcycle. Low visibility of rider can result in death or serious injury. (00316a)

5. Test affected circuits for proper operation.

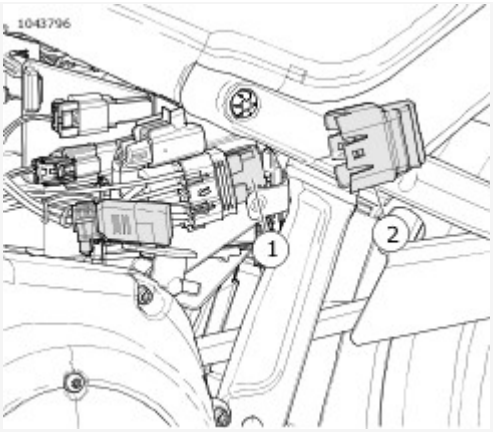

View interactive image

1	Main fuse
2	Fuse cover

Figure 1. Main Fuse

WARNING

To prevent accidental vehicle start-up, which could cause death or serious injury, disconnect negative (-) battery cable before proceeding. (00048a)

Disconnect negative battery cable when there is a possibility of injury caused by starter engagement (engine rotation).

Disconnect Negative Battery Cable

1. Remove right side cover. See Chassis → RIGHT SIDE COVER.
2. **Models with security:**
   a. Verify that fob is present.
   b. Turn OFF/RUN switch to RUN.
3. See Figure 1. Remove screw (1).
4. Disconnect negative battery cable (2).
5. **Models with security:** Turn ignition switch OFF.

Connect Negative Battery Cable

1. See Figure 1. Connect negative battery cable (2).
2. Install screw (1). Tighten
   Torque: 8.1–10.8 N·m (72–96 **in-lbs**) *Battery, negative cable, screw*
3. Install right side cover. See Chassis → RIGHT SIDE COVER.

WARNING

Be sure that all lights and switches operate properly before operating motorcycle. Low visibility of rider can result in death or serious injury. (00316a)

4. Test affected circuits for proper operation.

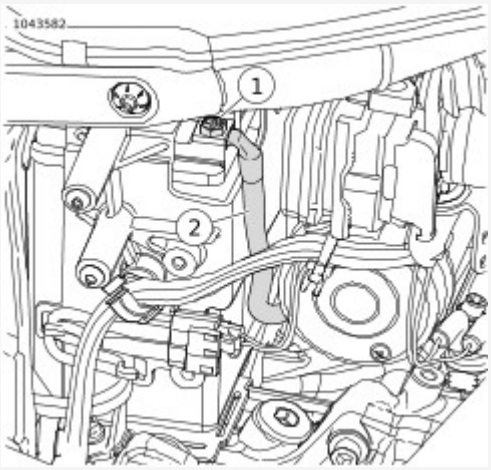

View interactive image

1	Screw
2	Battery Cable

Figure 1. Negative Battery Cable Disconnect

WARNING

To prevent accidental vehicle start-up, which could cause death or serious injury, disconnect negative (-) battery cable before proceeding. (00048a)

1. Remove right side cover. See **Chassis → RIGHT SIDE COVER**.
2. Remove battery. See **Maintenance → INSPECT BATTERY**.
3. **Models with side mounted shock adjuster:** Remove screw securing shock adjustment knob to ABS bracket. See **Chassis → REAR SHOCK ABSORBER**.

1. See **Electrical → STARTER → Install → Starter**. Remove positive cable (3).
2. Remove starter.
   a. Disconnect connector (2) from solenoid.
   b. Remove screws (1).
3. Discard O-ring (4).

Consumables

Description	Part Number	Size
LOCTITE 243 MEDIUM STRENGTH THREADLOCKER AND SEALANT (BLUE)	99642-97	6 ml (¼ fl oz)

1. See Figure 1. Install new O-ring (4).
   a. Lubricate **new** O-ring with clean engine oil.
   b. Install **new** O-ring (4).
2. Install starter.
   a. Apply thread-locker to screws (1).
   LOCTITE 243 MEDIUM STRENGTH THREADLOCKER AND SEALANT (BLUE) (99642-97)
   b. Install screws. Tighten.
   Torque: 29.8–32.5 N·m (22–24 ft-lbs) *Starter, mounting screw*
   c. Connect connector (2) to solenoid.
   d. Install positive battery cable (3) to solenoid. Tighten.
   Torque: 7.9–11.8 N·m (70–104 **in-lbs**) *Solenoid nut*

NOTE
Install battery cable at 3 o'clock position.

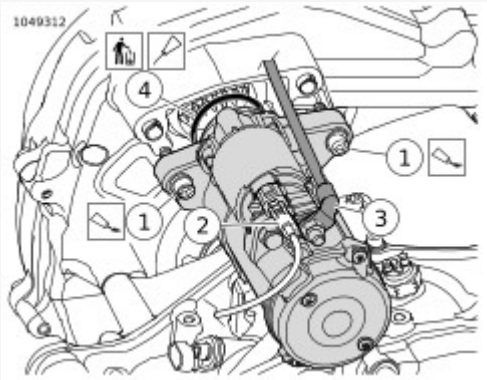

View interactive image

1	Screw (2)
2	Connector
3	Positive cable
4	O-ring

Figure 1. Starter

1. **Models with side mounted shock adjuster:** Install screw securing shock adjustment knob to ABS bracket. See **Chassis → REAR SHOCK ABSORBER**.
2. Install battery. See **Maintenance → INSPECT BATTERY**.
3. Install right side cover. See **Chassis → RIGHT SIDE COVER**.

1. Remove left side cover. See **Chassis → LEFT SIDE COVER**.
2. Remove main fuse. See **Electrical → POWER DISCONNECT**.
3. Remove left side rider foot control assembly, if necessary. See **Chassis → LEFT FOOT CONTROLS**.
4. Drain primary chaincase. See **Maintenance → REPLACE PRIMARY CHAINCASE LUBRICANT**.
5. Remove primary cover. See **Drive and Transmission → PRIMARY CHAINCASE HOUSING**.
6. Remove compensator assembly. See **Drive and Transmission → DRIVE COMPONENTS**.

Special Tools

Description	Part Number	Qty.
ALTERNATOR ROTOR REMOVER AND INSTALLER	HD-52073	1

1. See **Electrical → ALTERNATOR → Install → Rotor and Stator**. Disconnect connector (5) from voltage regulator.

   CAUTION

   The high-output rotor contains powerful magnets. Exercise caution to prevent possible hand injury during removal and installation. (00558b)

2. Remove rotor (4).

   Special Tool: **ALTERNATOR ROTOR REMOVER AND INSTALLER** (HD-52073)

3. See **Electrical → ALTERNATOR → Install → Harness Routing**. Discard cable strap.

   NOTE

   The rubber molded stator connector (5) is not serviceable.

4. See **Electrical → ALTERNATOR → Install → Rotor and Stator**. Discard screws (2).
5. See **Electrical → ALTERNATOR → Install → Remove Grommet From Crankcase (Typical)**. Remove grommet (2).
   a. Use the end of an awl (1) or small screwdriver to move grommet (2) away from crankcase.
   b. Spray isopropyl alcohol or glass cleaner into opening.
   c. Repeat this step at one or two other locations around grommet.
   d. Push grommet from outside of crankcase while pulling through the bore with needle nose pliers.

   NOTE

   Do not pull stator wiring unless the stator is being replaced.

6. Remove stator assembly.

Special Tools

Description	Part Number	Qty.
ALTERNATOR ROTOR REMOVER AND INSTALLER	HD-52073	1

1. Install grommet.
   a. Lubricate parts with glass cleaner or isopropyl alcohol. Ribs of grommet must be clean and free of dirt and oily residue.
   b. Feed connector and harness through hole from inside crankcase.
   c. Push grommet into crankcase bore while carefully pulling on outside cable.
   d. Installation is complete when cable stop contacts casting and capped rib of grommet exits crankcase bore.

   NOTE

   Do not reuse stator mounting screws.

2. See Figure 1. Secure stator to crankcase using **new** screws (2). Tighten to:
   Torque: 6.2–8.5 N·m (55–75 **in-lbs**) *Stator mounting screws*
3. See Figure 2. Secure stator wiring (2) to frame with **new** cable strap (1). Verify that stator wire does not contact the engine or frame.
4. Apply silicone based dielectric grease to connector.
5. Install connector to voltage regulator. Engage locking latch.

   NOTE

   Install rotor slowly to prevent damaging rotor magnets. Damaged magnet fragments can damage the stator.

   CAUTION

   The high-output rotor contains powerful magnets. Exercise caution to prevent possible hand injury during removal and installation. (00558b)

6. Install rotor.

   Special Tool: ALTERNATOR ROTOR REMOVER AND INSTALLER (HD-52073)

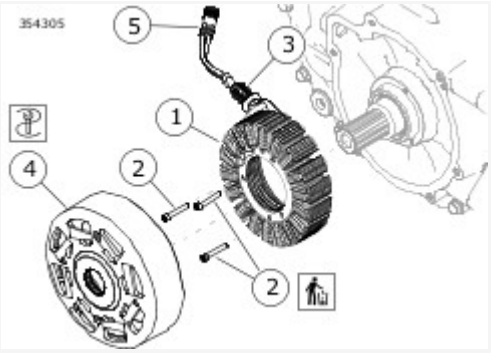

View interactive image

1	Stator
2	Screw (3)
3	Grommet
4	Rotor
5	Connector [47B]

Figure 1. Rotor and Stator

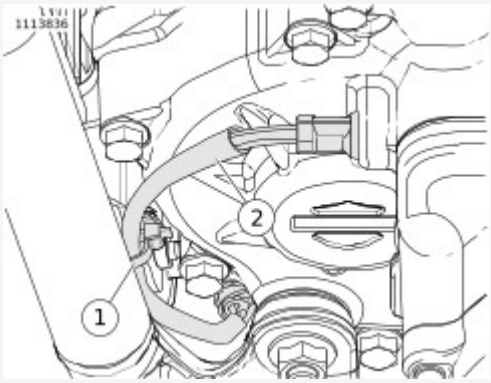

View interactive image

1	Anchored cable strap
2	Stator wiring

Figure 2. Harness Routing

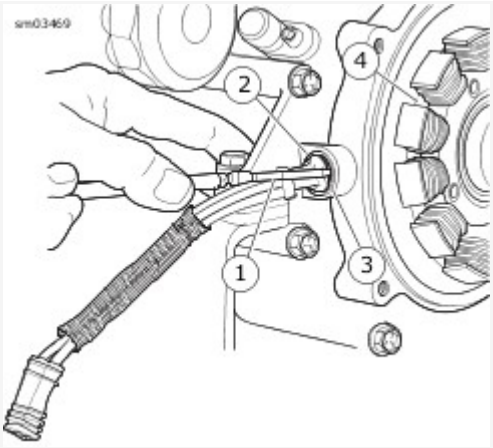

View interactive image

1	Awl
2	Grommet
3	Stator

Figure 3. Remove Grommet From Crankcase (Typical)

1. Install compensator assembly. See **Drive and Transmission → DRIVE COMPONENTS**.
2. Install primary cover. See **Drive and Transmission → PRIMARY CHAINCASE HOUSING**.
3. Fill primary chaincase. See **Maintenance → REPLACE PRIMARY CHAINCASE LUBRICANT**.
4. Install left side rider foot control assembly. See **Chassis → LEFT FOOT CONTROLS**.
5. Install main fuse. See **Electrical → POWER DISCONNECT**.
6. Install left side cover. See **Chassis → LEFT SIDE COVER**.

1. Remove left side cover. See **Chassis → LEFT SIDE COVER**.
2. Remove main fuse. See **Electrical → POWER DISCONNECT**.

1. See **Electrical → VOLTAGE REGULATOR → Install → Voltage Regulator** Remove screws (1).
2. Remove voltage regulator (2).
3. Disconnect voltage regulator connectors (3).

1. Install voltage regulator bracket, if removed.
   a. Install bracket.
   b. Install screws. Tighten.
      Torque: 11.3–13.6 N·m (100–120 **in-lbs**) *Voltage regulator bracket, screw*
2. See **Figure 1**. Connect voltage regulator connectors (3).
3. Align voltage regulator (2) to mounting bracket.
4. Install screws (1). Tighten.
   Torque: 12–14 N·m (106–124 **in-lbs**) *Voltage regulator, screw*

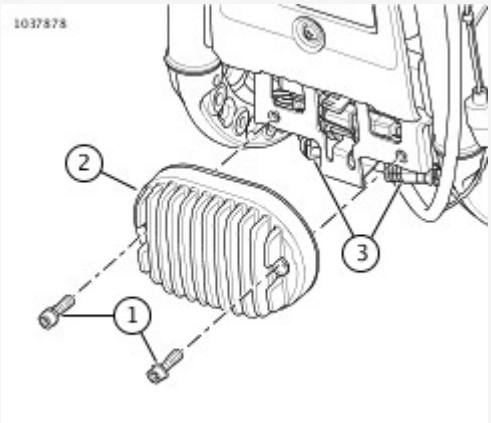

View interactive image

1	Screw (2)
2	Voltage regulator
3	Connector (2)

Figure 1. Voltage Regulator

1. Install main fuse. See **Electrical → POWER DISCONNECT**.
2. Install left side cover. See **Chassis → LEFT SIDE COVER**.

WARNING

Disconnecting spark plug cable with engine running can result in electric shock and death or serious injury. (00464b)

NOTE

- Remove cable end by pulling on rubber boot only. Do not pull on cable or damage can result.
- Pull and twist simultaneously to remove rubber boot.

1. See **Electrical → SPARK PLUG CABLES → Install → Spark Plug Cable**. Remove cables retainers (5).
2. Remove cables (1–4) from ignition coil.
3. Remove boot from spark plugs.
4. Remove cables.

1. See Figure 1. Route and connect long cables (3, 4) to right spark plugs.
2. Connect short cables (1, 2) to left spark plugs.
3. Connect cables to ignition coil.
4.

NOTE
Make sure spark plug cables do not make contact with rocker cover screw heads.

   See Figure 2. Install cables retainers (5).
5. Verify spark plug cable routing.

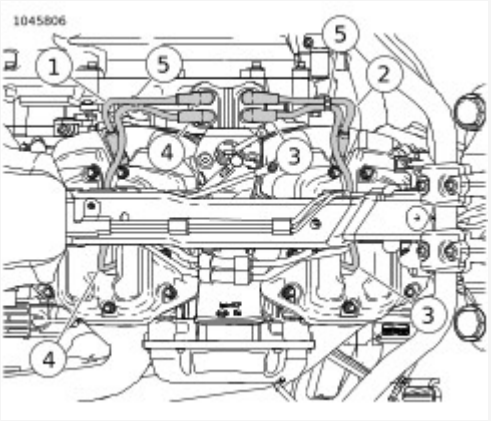

View interactive image

1	Left rear
2	Left front
3	Right front
4	Right rear
5	Cable retainer (2)

Figure 1. Spark Plug Cable

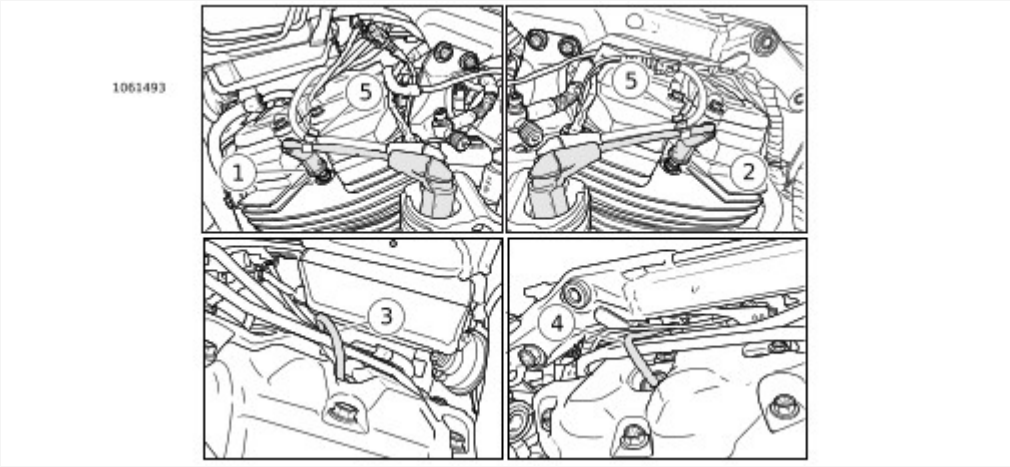

View interactive image

1	Front left spark plug
2	Rear left spark plug
3	Front right spark plug
4	Rear right spark plug
5	Cable retainer (2)

Figure 2. Spark Plug Cable Routing: (Fuel tank removed for clarity)

1. Remove main fuse. See **Electrical → POWER DISCONNECT**.

1. See **Electrical → IGNITION COIL → Install → Ignition Coil Connector**. Disconnect ignition coil connector (3).
2. See **Electrical → IGNITION COIL → Install → Ignition Coil**. Disconnect spark plug cables (1)
3. Remove screw (2).
4. Remove ignition coil (3).

1. See **Figure 2**. Install ignition coil (3).
2. Install screw (2). Tighten.
   Torque: 15–19 N·m (11–14 ft-lbs) *Ignition coil, screw*
3. Connect spark plug cables (1). See **Electrical → SPARK PLUG CABLES**
4. See **Figure 1**. Connect ignition coil connector.

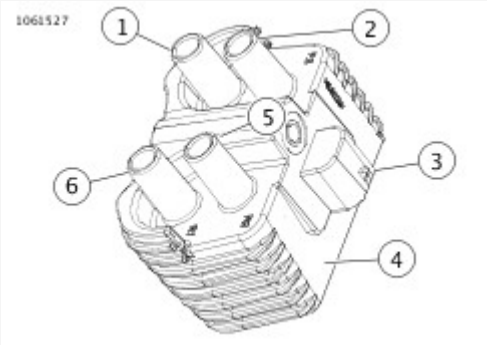

View interactive image

1	Front left
2	Front right
3	Ignition coil connector
4	Ignition coil back
5	Rear right
6	Rear left

Figure 1. Ignition Coil Connector

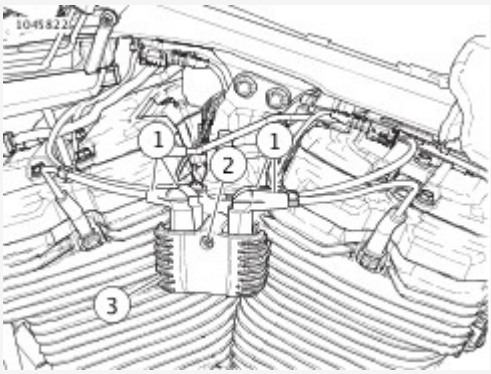

View interactive image

1	Spark plug cable (4)
2	Screw

3	Ignition coil

Figure 2. Ignition Coil

1. Install main fuse. See **Electrical → POWER DISCONNECT**.

- The left and right hand control modules are non-repairable.
- The clutch switch and brake switch are hard-wired to the control modules.
- The clutch switch and brake switch are replaceable. This section details the proper method for soldering new switches. For removal and installation procedures, see **Electrical → RIGHT HAND CONTROL MODULE (RHCM) → Front Brake Switch Replacement** or **Electrical → LEFT HAND CONTROL MODULE (LHCM) → Clutch Switch Replacement**.

Special Tools

Description	Part Number	Qty.
ROBINAIR HEAT GUN	HD-25070	1
ULTRA TORCH UT-100	HD-39969	1
HEAT SHIELD ATTACHMENT	HD-41183	1

1. Push conduit back to better access wires and avoid damaging conduit with radiant heating device. Secure conduit with cable strap.
2. Strip 12.7 mm (0.5 in) of insulation off switch wires. Twist stripped ends of switch wires until all strands are tightly coiled.
3. Cut dual wall heat shrink tubing, supplied in repair kit into 25.4 mm (1.0 in) segments. Slide tubing over each wire of **new** switch assembly.
4. Splice existing and **new** switch wires, matching wire colors. Solder the spliced connections. For best results, splice one wire at a time.
5. Center the heat shrink tubing over the soldered splices.

WARNING

Be sure to follow manufacturer's instructions when using the UltraTorch UT-100 or any other radiant heating device. Failure to follow manufacturer's instructions can cause a fire, which could result in death or serious injury. (00335a)

- Avoid directing heat toward any fuel system component. Extreme heat can cause fuel ignition/explosion resulting in death or serious injury.
- Avoid directing heat toward any electrical system component other than the connectors on which heat shrink work is being performed.
- Always keep hands away from tool tip area and heat shrink attachment.

6. See Figure 1. Use ULTRA TORCH UT-100 (Part Number:HD-39969) or ROBINAIR HEAT GUN (Part Number:HD-25070) with HEAT SHIELD ATTACHMENT (Part Number:HD-41183) or equivalent. Uniformly heat the heat shrink tubing to insulate and seal the soldered connections. Apply heat just until the meltable sealant exudes out both ends of tubing and assumes a smooth cylindrical appearance.
7. Inspect solder connection.
    a. Inspect the melted sealant for solder beads.
    b. Excess solder or heat can force out some solder with the melted sealant.
    c. Remove any solder found.
    d. Briefly heat the connection to reseal the tubing if solder beads were removed.
    e. Use less solder or reduce heating time or intensity when doing subsequent splices.

WARNING

Be sure that all lights and switches operate properly before operating motorcycle. Low visibility of rider can result in death or serious injury. (00316a)

View interactive image

1	Ultra Torch UT-100
2	Robinair Heat Gun
3	Heat Shield Attachment

Figure 1. Radiant Heating Devices

1. Remove seat. See **Chassis → SEAT**.
2. Purge fuel system. See **Fuel and Exhaust → PURGE FUEL LINE**.
3. Remove main fuse. See **Electrical → POWER DISCONNECT**.
4. Remove fuel tank. See **Fuel and Exhaust → FUEL TANK**.
5. Detach clutch control clamp from handlebar. See **Chassis → CLUTCH CONTROL**.

WARNING

To prevent accidental vehicle start-up, which could cause death or serious injury, remove main fuse before proceeding. (00251b)

1. See **Figure 1**. Remove brake line clamp screws.
2. See **Figure 2**. Remove front electrical caddy from left side of frame.
3. Record locations of cable straps securing LHCM harness.
4. Discard cable straps securing LHCM harness.
5. Disconnect **LHCM** (Left hand control module) connector (9).

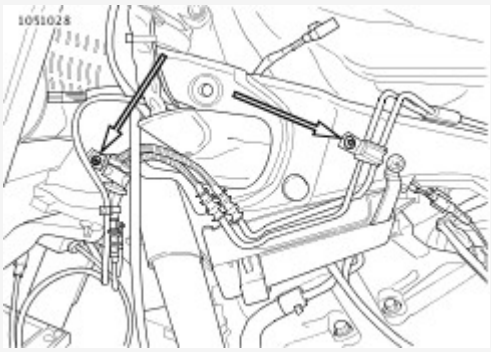

View interactive image

Figure 1. Brake Line Clamps

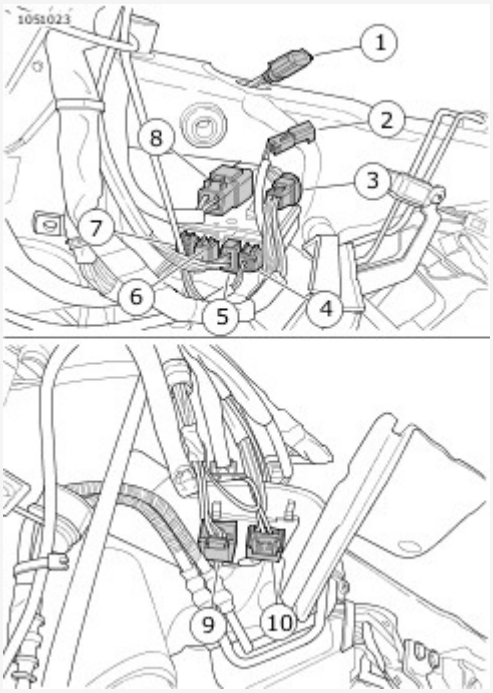

View interactive image

1	Console

2	Heated hand grip
3	Twist grip
4	WSS (Wheel speed sensor)
5	Right turn signal
6	RHCM (Right hand control module) [22-2]
7	RHCM [22-1]
8	Headlamp
9	LHCM
10	Left turn signal

Figure 2. Front Electrical Caddy Connectors

6. **Cruise Control Models:** See Figure 3. Remove clip (2) and switch (1).
7. Remove LHCM housing.
   a. Remove upper and lower switch housing screws.
   b. Remove upper switch housing.
   c. See Figure 4. Remove screws (3) and retainer (1).
   d. Remove clutch switch (2) and LHCM from lower switch housing.

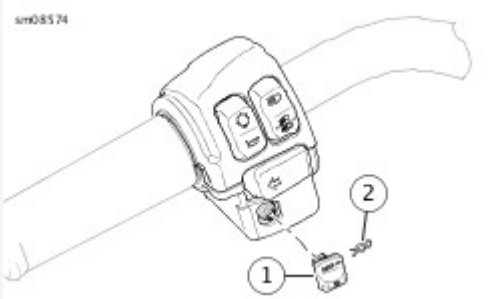

View interactive image

1	Switch
2	Clip

Figure 3. Cruise Switch

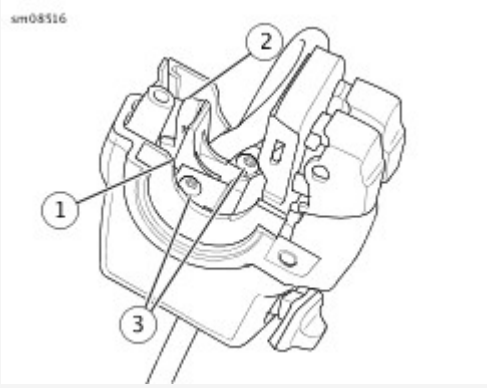

View interactive image

1	Retainer
2	Clutch switch
3	Screw (2)

Figure 4. LHCM and Clutch Switch Retainer

8.

NOTE

Verify that there is enough wire to work at both ends of handlebar with scrap wire installed through handlebar.

Internally wired handlebars: Remove control module.

a. Attach scrap wire to control module connector.
b. Pull control module wiring through handlebar.
c. Disconnect scrap wire from old control module connector.

9. **Externally wired handlebars:** Remove control module.
   a. Release module wiring from anchors.

1. **Internally wired handlebars:** Route LHCM (Left hand control module) wires through handlebar.
   a. Attach scrap wire to **new** LHCM wiring.
   b. Pull LHCM wiring through handlebar.
   c. Remove scrap wire.
2. **Externally wired handlebars:** Attach using anchors.
3. See Electrical → LEFT HAND CONTROL MODULE (LHCM) → Remove → LHCM and Clutch Switch Retainer. Place switch assembly into position on lower switch housing.
4. Install clutch switch (2).
5.

   NOTE

   - **Handlebar-mounted turn singles:** See Figure 1. Verify that turn signal wiring (1) is routed through opening (2).
   - Always tighten lower switch housing screw first, so that any gap between upper and lower housings is at front of switch.

   See Electrical → LEFT HAND CONTROL MODULE (LHCM) → Remove → LHCM and Clutch Switch Retainer. Install retainer (1) with screws (3). Tighten.
   Torque: 0.9–1.1 N·m (8–10 **in-lbs**) *Handlebar switch assembly retainer screws*
6. See Figure 2. Install upper and lower switch housing. Align seam (2) with alignment mark (1).

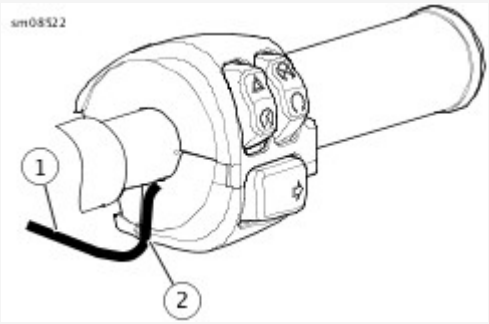

View interactive image

1	Turn signal wiring
2	Slot in control module

Figure 1. Turn Signal Routing (Typical)

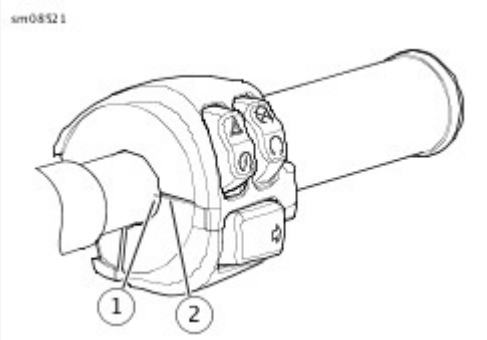

View interactive image

1	Alignment mark
2	Control module seam

Figure 2. Hand Control Module Alignment (Typical)

7. Install switch housing screws. Tighten.
   Torque: 4–5.1 N·m (35–45 **in-lbs**) *Handlebar switch housing screws*
8. **Cruise Control Models:** See **Electrical → LEFT HAND CONTROL MODULE (LHCM) → Remove → Cruise Switch**. Install switch (1) and clip (2).
9. See **Electrical → LEFT HAND CONTROL MODULE (LHCM) → Remove → Front Electrical Caddy Connectors**. Connect **LHCM** connector (9).
10. Place front electrical caddy into frame, and install frame plug.
11. See **Electrical → LEFT HAND CONTROL MODULE (LHCM) → Remove → Brake Line Clamps**. Install brake clamp screws. Tighten.
    Torque: 4.1–5.4 N·m (36–48 **in-lbs**) *Brake line clamp screw*
12. Install **new** cable straps in locations recorded in Remove.

Rocker Switch Caps

1. Remove handlebar switch housing.
2.

NOTE

There are small pins and springs under some caps. Springs and pins could be lost during cap removal or installation.

Remove switch cap.

   a. See Figure 1. Carefully pry switch cap up off pin (2) on side of switch.

   b. Pry switch cap up and away from pin (3) on opposite side.

3. Install switch cap.

   a. Place cap onto switch, angling hole over pin (4).

   b. Carefully press switch cap down onto opposite pin (5), rocking cap until snapping into place.

4. Verify proper operation.
5. Install switch housing.

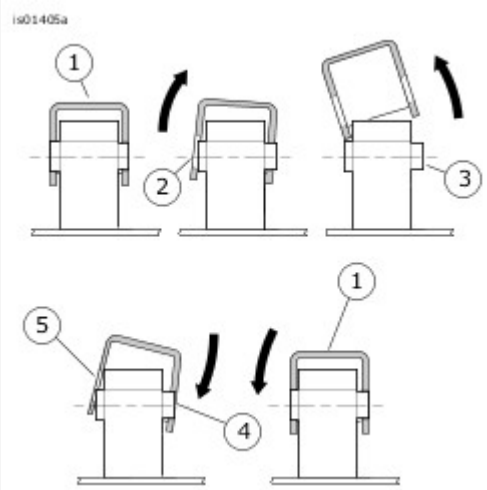

View interactive image

1	Switch cap installed correctly
2	Switch cap removal from shaft
3	Switch cap removal from pivot pin
4	Switch cap installation on to pivot pin
5	Switch cap installation onto shaft

Figure 1. Switch Cap Removal and Replacement

Cruise Switch Cap

1. See Figure 2. Remove cap.
   a. Remove clip (2).
   b. Remove cap (1).
2. Install cap.
   a. Install cap.
   b. Install clip.
   c. Verify cap is secure.

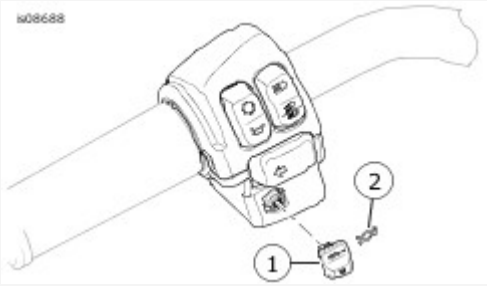

View interactive image

1	Cap
2	Clip

Figure 2. Cruise Switch Cap

1. Remove upper switch housing cover. See **Electrical → LEFT HAND CONTROL MODULE (LHCM) → Remove**.
2. See **Electrical → LEFT HAND CONTROL MODULE (LHCM) → Remove → LHCM and Clutch Switch Retainer**. From inside the switch housing, remove screws (3) and retainer (1).
3. Remove clutch switch (2) from housing.
4. Cut wires flush at inoperative clutch switch.
5. If **new** clutch switch wires have terminals installed, cut wires at terminal end.
6. Remove 0.25-0.31 in (6.4-7.9 mm) of insulation from each wire end.
7. Cut two pieces of dual wall heat shrink tubing to 12.7 mm (0.5 in).
8. Solder wires together and cover with heat shrink tubing.
9. See **Electrical → LEFT HAND CONTROL MODULE (LHCM) → Remove → LHCM and Clutch Switch Retainer**. Install clutch switch (2) into housing. Install retainer (1) and screws (3). Tighten.
   Torque: 0.9–1.1 N·m (8–10 **in-lbs**) *Handlebar switch assembly retainer screws*
10. Assemble left handlebar switch housing. See **Electrical → LEFT HAND CONTROL MODULE (LHCM) → Install**.

1. Install clutch controls on handlebar. See **Chassis → CLUTCH CONTROL**.
2. Install fuel tank. See **Fuel and Exhaust → FUEL TANK**.
3. Install main fuse. See **Electrical → POWER DISCONNECT**.
4. Install seat. See **Chassis → SEAT**.

1. Remove seat. See **Chassis → SEAT**.
2. Purge fuel system. See **Fuel and Exhaust → PURGE FUEL LINE**.
3. Remove main fuse. See **Electrical → POWER DISCONNECT**.
4. Remove fuel tank. See **Fuel and Exhaust → FUEL TANK**.
5. Detach front brake clamp from handlebar. See **Chassis → FRONT BRAKE MASTER CYLINDER**.

WARNING

To prevent accidental vehicle start-up, which could cause death or serious injury, remove main fuse before proceeding. (00251b)

1. See **Figure 1**. Remove brake line clamp screws.
2. See **Figure 2**. Remove front electrical caddy.
3. Record locations of cable straps securing RHCM harness.
4. Discard cable straps securing RHCM harness.
5. Disconnect **RHCM** (Right hand control module) connectors (6 and 7).

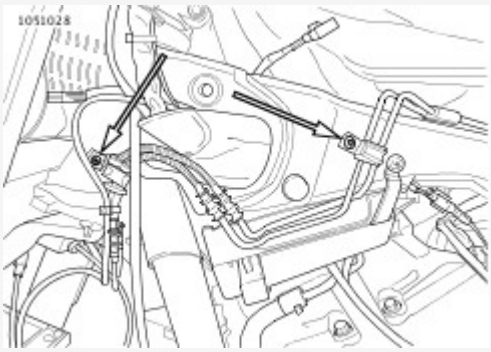

View interactive image

Figure 1. Brake Line Clamps

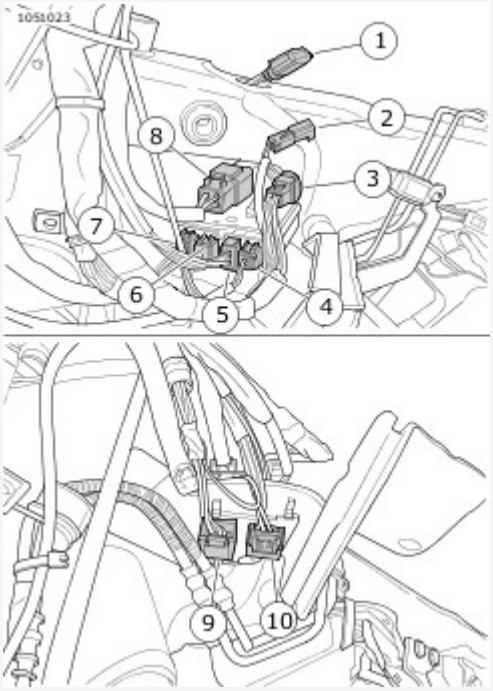

View interactive image

1	Console

2	Heated hand grip
3	Twist grip
4	WSS (Wheel speed sensor)
5	Right turn signal
6	RHCM [22-2]
7	RHCM [22-1]
8	Headlamp
9	LHCM (Left hand control module)
10	Left turn signal

Figure 2. Front Electrical Caddy Connectors

6. Remove RHCM housing.
   a. Remove upper and lower switch housing screws.
   b. Remove upper switch housing.
   c. See Figure 3. Remove screws (3) and retainer (1).
   d. Remove brake switch (2) and RHCM from lower switch housing.

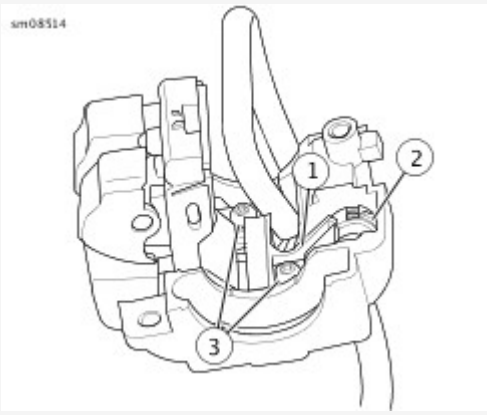

View interactive image

1	Retainer
2	Brake switch
3	Screw (2)

Figure 3. RHCM and Brake Switch Retainer

7.

NOTE

Verify that there is enough wire to work at both ends of handlebar with scrap wire installed through handlebar.

Internally wired handlebars: Remove control module.

a. Attach scrap wire to control module connector.
b. Pull control module wiring through handlebar.
c. Disconnect scrap wire from old control module connector.

8. **Externally wired handlebars:** Remove control module.
   a. Release module wiring from anchors.

1. **Internally wired handlebars:** Route RHCM (Right hand control module) wires through handlebar.
   a. Attach scrap wire to **new** RHCM wiring.
   b. Pull RHCM wiring through handlebar.
   c. Remove scrap wire.
2. **Externally wired handlebars:** Attach using anchors.
3. See **Electrical → RIGHT HAND CONTROL MODULE (RHCM) → Remove → RHCM and Brake Switch Retainer**. Place switch assembly into position on lower switch housing. Install brake switch (2).
4.

   NOTE

   - **Handlebar-mounted turn singles:** See Figure 1. Verify that turn signal wiring (1) is routed through opening (2).
   - Always tighten lower switch housing screw first, so that any gap between upper and lower housings is at front of switch.

   See **Electrical → RIGHT HAND CONTROL MODULE (RHCM) → Remove → RHCM and Brake Switch Retainer**. Install retainer (1) with screws (3). Tighten.
   Torque: 0.9–1.1 N·m (8–10 **in-lbs**) *Handlebar switch assembly retainer screws*
5. See Figure 2. Install upper and lower switch housing. Align seam (2) with alignment mark (1).

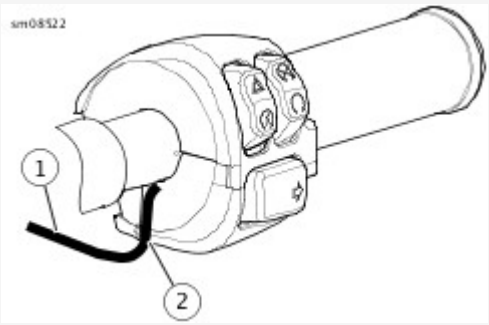

View interactive image

1	Turn signal wiring
2	Slot in control module

Figure 1. Turn Signal Routing (Typical)

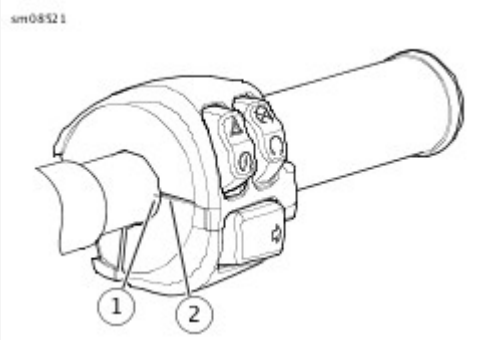

View interactive image

1	Alignment mark
2	Control module seam

Figure 2. Hand Control Module Alignment (Typical)

6. Install switch housing screws. Tighten.
   Torque: 4–5.1 N·m (35–45 **in-lbs**) *Handlebar switch housing screws*
7. Place front electrical caddy into frame, and install frame plug.
8. See **Electrical → RIGHT HAND CONTROL MODULE (RHCM) → Remove → Front Electrical Caddy Connectors**. Connect **RHCM** connectors (6 and 7).
9. See **Electrical → RIGHT HAND CONTROL MODULE (RHCM) → Remove → Brake Line Clamps**. Install brake line clamp screws. Tighten.
   Torque: 4.1–5.4 N·m (36–48 **in-lbs**) *Brake line clamp screw*
10. Install **new** cable straps in locations recorded in REMOVE.

Rocker Switch Caps

1. Remove handlebar switch housing. See Electrical → LEFT HAND CONTROL MODULE (LHCM) → Remove.
2.

   NOTE

   There are small pins and springs under some caps. Springs and pins could be lost during cap removal or installation.

   Remove switch cap.

   a. See Figure 1. Carefully pry switch cap up off pin (2) on side of switch.

   b. Pry switch cap up and away from pin (3) on opposite side.
3. Install switch cap.

   a. Place cap onto switch, angling hole over pin (4).

   b. Carefully press switch cap down onto opposite pin (5), rocking cap until snapping into place.
4. Verify proper operation.
5. Install switch housing. See Electrical → LEFT HAND CONTROL MODULE (LHCM) → Install.

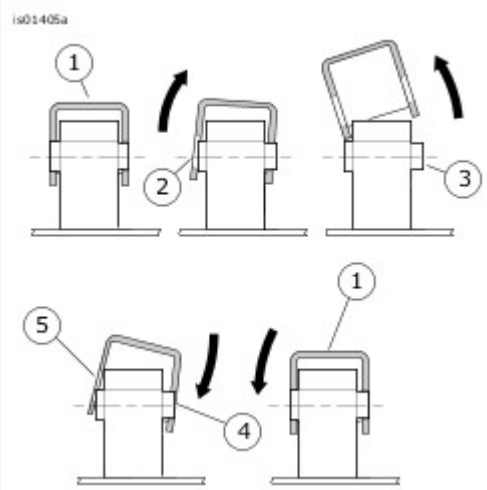

View interactive image

1	Switch cap installed correctly
2	Switch cap removal from shaft
3	Switch cap removal from pivot pin
4	Switch cap installation on to pivot pin
5	Switch cap installation onto shaft

Figure 1. Switch Cap Removal and Replacement

1. Remove upper switch housing cover. See **Electrical → RIGHT HAND CONTROL MODULE (RHCM) → Remove**.
2. See **Electrical → RIGHT HAND CONTROL MODULE (RHCM) → Remove → RHCM and Brake Switch Retainer**. From inside the switch housing, remove screws (3) and retainer (1).
3. Remove brake switch (2) from housing.
4. Cut wires flush at inoperative brake switch.
5. If **new** brake switch wires have terminals installed, cut wires at terminal end.
6. Remove 6.4-7.9 mm (0.25-0.31 in) of insulation from each wire end.
7. Cut two pieces of dual wall heat shrink tubing to 12.7 mm (0.5 in).
8. Solder wires together and cover with heat shrink tubing. See **Electrical → HANDLEBAR CONTROL MODULES**.
9. See **Electrical → RIGHT HAND CONTROL MODULE (RHCM) → Remove → RHCM and Brake Switch Retainer**. Install brake switch (2) into housing. Install retainer (1) and screws (3). Tighten.
   Torque: 0.9–1.1 N·m (8–10 **in-lbs**) *Handlebar switch assembly retainer screws*
10. Assemble right handlebar switch housing. See **Electrical → RIGHT HAND CONTROL MODULE (RHCM) → Install**.

1. Install front brake controls on handlebar. See **Chassis → FRONT BRAKE MASTER CYLINDER**.
2. Install fuel tank. **Fuel and Exhaust → FUEL TANK**
3. Install main fuse. See **Electrical → POWER DISCONNECT**.
4. Install seat. See **Chassis → SEAT**.

- Both the ECM (Electronic control module) and the IM (Instrument module) retain the odometer value. If the IM is replaced, the new IM will display the odometer value stored in the ECM. The new IM will lock to the mileage stored in the ECM after 50 km (31 mi) have been accumulated. The trip B odometer will display the countdown mileage.
- If the IM is installed on another vehicle after it has locked to the ECM, the odometer will display "VIN ERR" on the new vehicle. If the IM is removed from the vehicle before the countdown reaches zero, it will reset the mileage countdown to 50 km (31 mi). This mileage countdown allows for a road test to verify that IM replacement was the proper repair.

1. **Console mounted:** Remove console. See **Fuel and Exhaust → CONSOLE**.
2. **Handlebar mounted:** Remove upper clamp of handlebars. See **Chassis → HANDLEBAR**.

Remove

1. See Figure 1. Remove IM (Instrument module) (2).
   a. Remove screws (3).
   b. Remove IM from upper clamp (1).

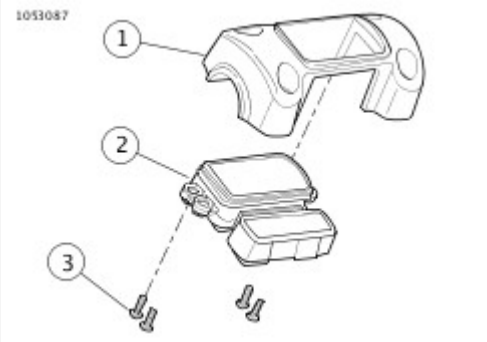

View interactive image

1	Upper clamp
2	IM
3	Screw (4)

Figure 1. IM: FXBB, FXBR, FXBRS

Install

1.

NOTE

Verify that gasket does not twist while installing IM

See Figure 1. Install IM (2).

a. Align IM in upper clamp (1).
b. Install screws (3). Tighten.
   Torque: 1.4–1.9 N·m (12–17 **in-lbs**) *IM to upper clamp screw*

Remove

1. See Figure 1. Remove IM.
   a. Remove screws (5).
   b. Remove panel (4).
   c. Remove Screws (3).
   d. Disconnect connector (1).
   e. Remove IM (2).

Install

NOTE

Verify that gasket does not twist while installing IM.

1. See Figure 1. Install IM.
   a. Connect connector (1) to IM (2).
   b. Install IM.
   c. Install screws (3). Tighten.
      Torque: 1.4–1.9 N·m (12–17 **in-lbs**) *IM screws (FXDRS)*
   d. Install panel (4).
   e. Install screws (5). Tighten.
      Torque: 1.4–1.9 N·m (12–17 **in-lbs**) *IM panel screws (FXDRS)*

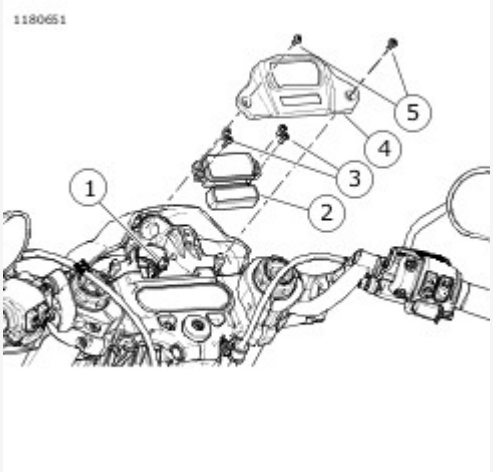

View interactive image

1	Connector
2	IM
3	Screw (4)

4	Panel
5	Screw (2)

Figure 1. IM: Light Bracket Mount

Remove

1. See Figure 1. Disconnect IM (Instrument module) connector (2).
2. Remove back clamp from IM.
   a. Pry between the tabs (1) and back clamp (3).
   b. Raise and release back clamp from IM. Remove back clamp from IM.
3. Remove IM.
4. Remove gasket.

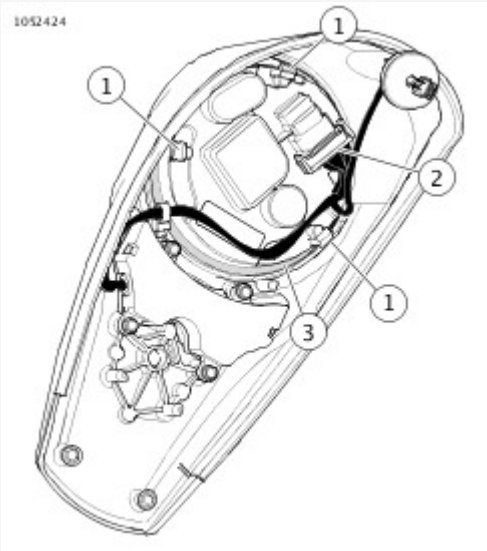

View interactive image

1	Tabs
2	IM connector
3	Back clamp

Figure 1. Console: FLDE, FLHC, FLHCS, FLSL, FLFB, FLFBS (Typical)

Install

1. Install gasket onto console.
2. Install IM.

NOTE

Verify that gasket does not twist while installing IM.

3. See Figure 1. Install back clamp.
   a. Press on back clamp (3) until three tabs (1) engage on

back of **IM**.

4. Connect **IM** connector (2).

Remove

1. See Figure 1. Remove screws (2).
2. Remove harness from clip (1).
3. Remove IM (Instrument module) assembly.
4. See Figure 2. Disconnect IM connector (2).
5. See Figure 3. Pushing from the bottom of the IM (1), separate the IM from the housing (3).
6. Remove gasket (2).

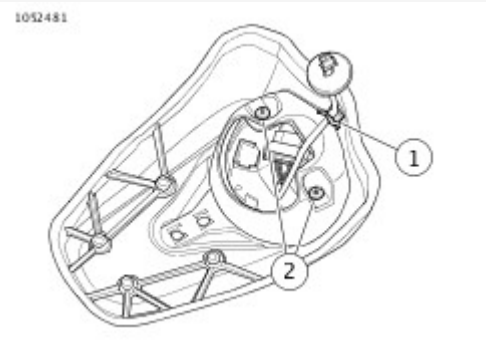

View interactive image

1	Harness clip
2	Screw (2)

Figure 1. Console: FXFB, FXFBS

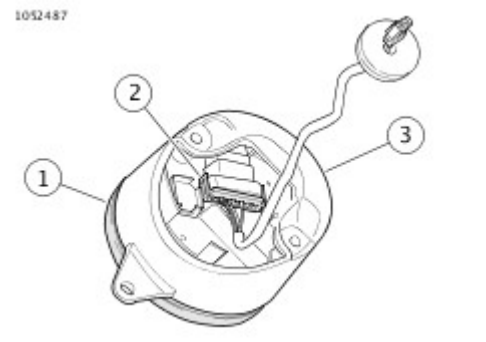

View interactive image

1	IM
2	IM connector
3	Housing

Figure 2. IM and Housing: FXFB. FXFBS

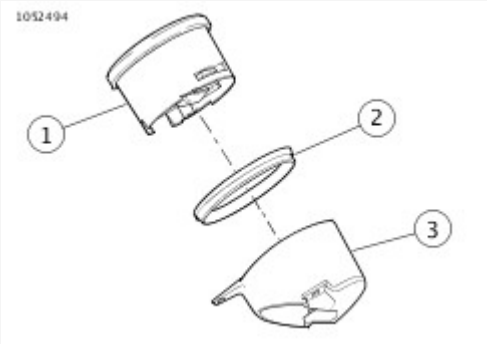

View interactive image

1	IM
2	Gasket
3	Housing

Figure 3. IM: FXFB, FXFBS

Install

1. **NOTE**

   Verify that gasket does not twist while installing IM.

   See Figure 3. Install gasket (2) onto IM (1).
2. Install IM into housing (3).
3. See Figure 2. Connect IM connector (2).
4. Install IM assembly into console.
5. See Figure 1. Install screws (2). Tighten.
   Torque: 2.3–2.8 N·m (20–25 **in-lbs**) *Housing to IM screw*
6. Install harness into clip (1).

Remove

1. See Figure 1. Disconnect IM (Instrument module) connector (2).
2. Remove IM screws (4).
3. See Figure 2. Remove IM (2).
4. Remove IM gasket (3).

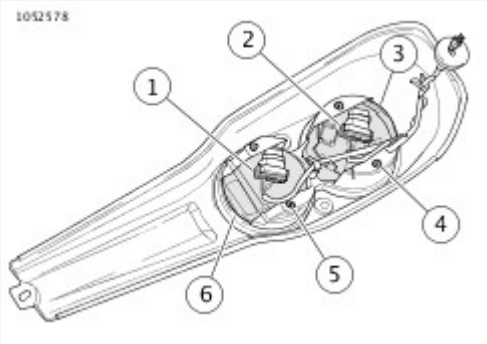

View interactive image

1	Tachometer connector
2	IM connector
3	IM
4	IM screw (2)
5	Tachometer screw (2)
6	Tachometer

Figure 1. Console: FXLR

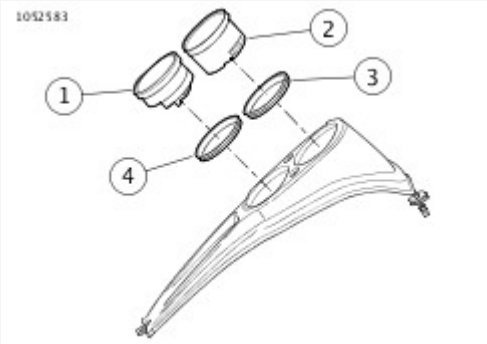

View interactive image

1	Tachometer

2	IM
3	IM gasket
4	Tachometer gasket

Figure 2. IM and Tachometer: FXLR

Install

1. See Figure 2. Install IM gasket (3) on IM (2).
2. Install IM into console.
3. See Figure 1. Install IM screws (4). Tighten.
   Torque: 1.1–2.3 N·m (10–20 **in-lbs**) *IM screw*
4. Connect IM connector (2).

1. **Handlebar mounted:** Install upper clamp of handlebars. See **Chassis → HANDLEBAR**.
2. **Console mounted:** Install console. See **Fuel and Exhaust → CONSOLE**.

1. Remove console. See **Fuel and Exhaust → CONSOLE**.

1. See Figure 1. Disconnect tachometer connector (1).
2. Remove tachometer screws (5).

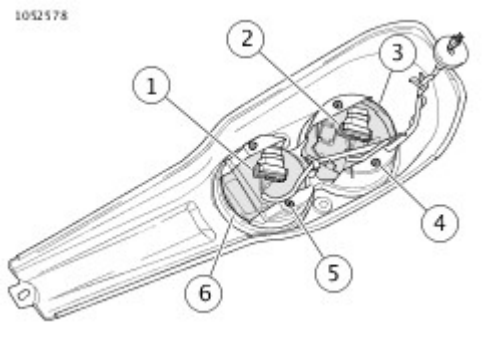

View interactive image

1	Tachometer connector
2	IM (Instrument module) connector
3	IM
4	IM screw (2)
5	Tachometer screw (2)
6	Tachometer

Figure 1. Console: FXLR

3. See Figure 2. Remove tachometer (1).
4. Remove tachometer gasket (4).

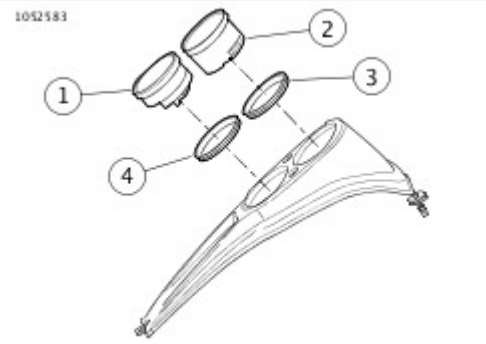

View interactive image

1	Tachometer
2	IM
3	IM gasket

4	Tachometer gasket

Figure 2. IM and Tachometer: FXLR

1. See **Electrical → TACHOMETER → Remove → IM and Tachometer: FXLR**. Install tachometer gasket (3) on tachometer (2).
2. Install tachometer into console.

3. See **Electrical → TACHOMETER → Remove → Console: FXLR**. Install tachometer screws (4). Tighten.
   Torque: 1.1–2.3 N·m (10–20 **in-lbs**) *tachometer screw*
4. Connect tachometer connector (2).

1. Install console. See **Fuel and Exhaust → CONSOLE**.

1. Remove main fuse. See **Electrical → POWER DISCONNECT**.
2. Remove seat. See **Chassis → SEAT**.
3. Remove console. See **Fuel and Exhaust → CONSOLE**.

1. See **Electrical → INDICATOR LAMPS → Install → Indicator Lamps**. Disconnect connector (1).
2. Discard cable strap (2).
3. Remove screws (3).
4. Remove indicator lamp assembly (4).

1. Install indicator lamp assembly (4).
2. Install screws (3). Tighten.
   Torque: 2.26–3.39 N·m (20–30 **in-lbs**) *Indicator lamp, screw*
3. Install **new** cable strap (2).
4. Connect connector (1).

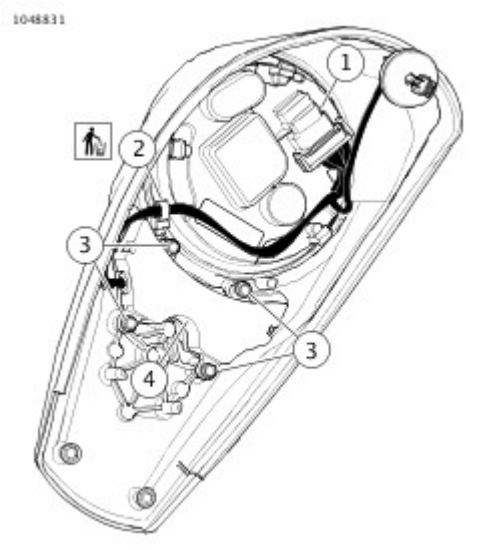

View interactive image

1	Connector
2	Cable strap
3	Screw (4)
4	Indicator lamp assembly

Figure 1. Indicator Lamps

1. Install console. See **Fuel and Exhaust → CONSOLE**.
2. Install seat. See **Chassis → SEAT**.
3. Install main fuse. See **Electrical → POWER DISCONNECT**.

1. Remove main fuse. See **Electrical → POWER DISCONNECT**.
2. **FXDRS, FXFB:** Loosen exhaust system. See **Fuel and Exhaust → EXHAUST SYSTEM**.

1. See **Electrical → OIL PRESSURE SWITCH → Install → Oil Pressure Switch**. Disconnect connector (2).
2. Remove switch (1).

1. See **Figure 1**. Install switch (1). Tighten.
   Torque: 17–23 N·m (13–17 ft-lbs) *Switch, Oil Pressure*
2. Connect connector (2).

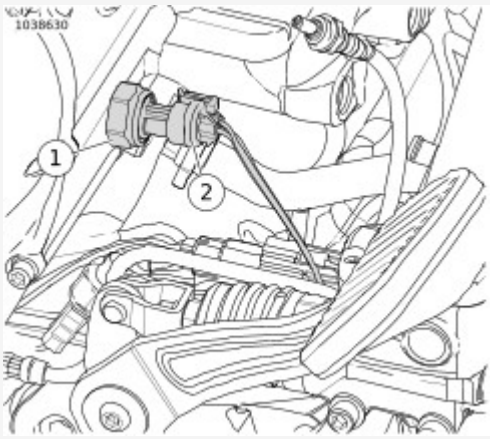

View interactive image

1	Switch
2	Connector

Figure 1. Oil Pressure Switch

1. **FXDRS, FXFB:** Tighten exhaust system. See **Fuel and Exhaust → EXHAUST SYSTEM**.
2. Install main fuse. See **Electrical → POWER DISCONNECT**.

1. Remove left side cover. See **Chassis → LEFT SIDE COVER**.
2. Remove main fuse. See **Electrical → POWER DISCONNECT**.
3. Remove right side cover. See **Chassis → RIGHT SIDE COVER**.
4. Place transmission in NEUTRAL.

1.

NOTE
Wires are interchangeable.

See **Electrical → NEUTRAL INDICATOR SWITCH → Install → Neutral Indicator Switch**. Disconnect wires (1) from switch (2).

2. Remove switch and O-ring.

1. Verify transmission is in NEUTRAL.
2. See **Figure 1**. Install **new** switch (2) and O-ring. Tighten.
   Torque: 13.6–20.3 N·m (120–180 **in-lbs**) *Switch, Neutral Indicator*
3.

NOTE
Wires are interchangeable.

   Connect harness wires (1).

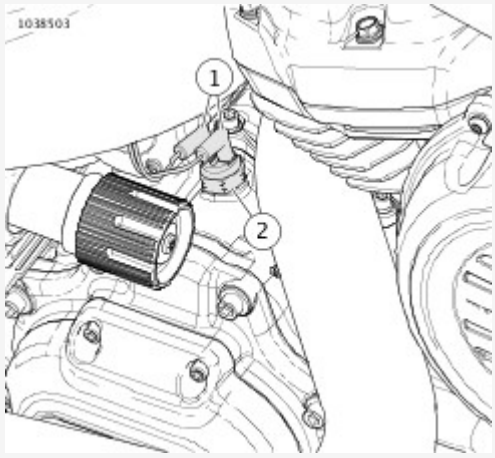

View interactive image

1	Wires
2	Switch

Figure 1. Neutral Indicator Switch

1. Install right side cover. See **Chassis → RIGHT SIDE COVER**.
2. Install main fuse. See **Electrical → POWER DISCONNECT**.
3. Install left side cover. See **Chassis → LEFT SIDE COVER**.

1. Remove main fuse. See **Electrical → POWER DISCONNECT**.

1. See **Electrical → HORN → Install → Horn**. Remove horn.
    a. Remove narrow screws (3).
    b. Remove wide screw (2).
    c. Remove horn assembly (1).
    d. Disconnect wire connectors (4).

1. See **Figure 1**. Install horn.
   a. Connect wire connectors (4).
   b. Position horn assembly (1).
   c. Install wide screw (2). Tighten.
      Torque: 9.4–12 N·m (7–9 ft-lbs) *Horn, Wide Mounting Screw*
   d. Install narrow screws (3). Tighten.
      Torque: 3–3.7 N·m (27–33 **in-lbs**) *Horn, Narrow Mounting Screw*

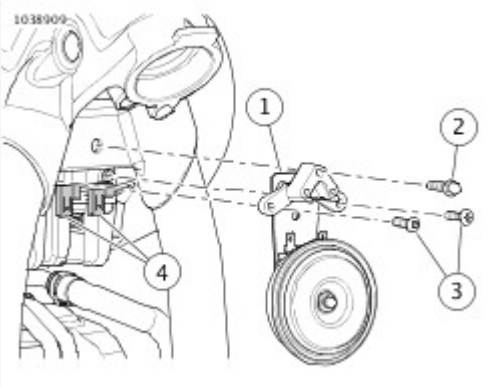

View interactive image

1	Horn assembly
2	Wide screw
3	Narrow screw (2)
4	Wire connector (2)

Figure 1. Horn

1. See **Electrical → HORN → Assemble → Horn Assembly**.
   Remove screws (1) and bracket (3).

1. See **Figure 1**. Install screws (1) and bracket (3). Tighten.
   Torque: 7–8 N·m (5–6 ft-lbs) *Horn, Bracket Screw*

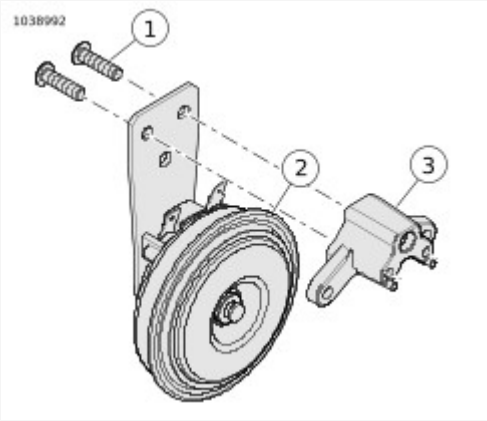

View interactive image

1	Screw (2)
2	Horn assembly
3	Bracket

Figure 1. Horn Assembly

1. Install main fuse. See **Electrical → POWER DISCONNECT**.

Remove

1. See Figure 1. Remove screw and nut (1).
2. Remove bezel (2).
3. **7-inch headlamp only:** Remove screws (10) and retainer (9).
4. **5-3/4 headlamp only:** Remove spacer (8).
5. Remove headlamp (3) from housing (7).
6. Disconnect connector (6).
7. Remove screws (5).
8. Remove isolator bracket (4).

Install

1. See Figure 1. Position isolator bracket (4) on headlamp (3).
2. Install screws (5). Tighten.
   Torque: 8.8–10.8 N·m (6.5–8.0 ft-lbs) *Headlamp isolator bracket screw*
3.

NOTE
Use alignment tabs on components.

   5-3/4 inch headlamp only: Install spacer (8) on headlamp (3).
4. Connect connector (6).
5.

NOTE
Use alignment tabs on components.

   Install headlamp (3) into housing (7).
6. **7-inch headlamp only:** Install retainer (9) and screws (10). Tighten.
   Torque: 2–2.5 N·m (18–22 **in-lbs**) *Headlamp retainer screw*
7. Install bezel (2).
8. Install screw and nut (1). Tighten.
   Torque: 1–1.6 N·m (9–14 **in-lbs**) *Headlamp bezel screw*

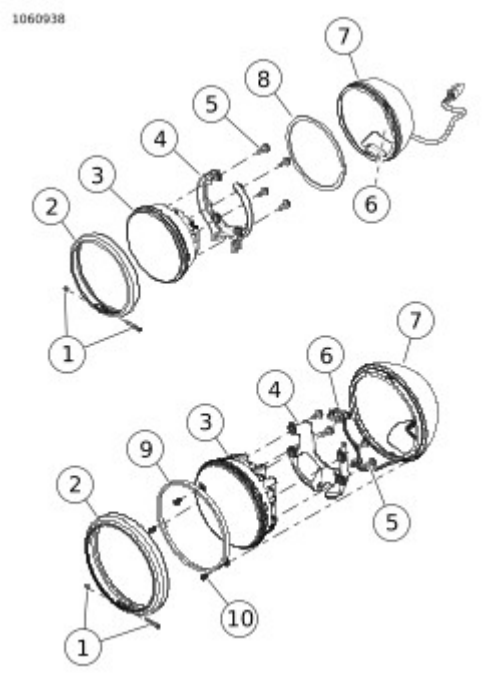

View interactive image

1	Screw and nut
2	Bezel
3	Headlamp
4	Isolator bracket
5	Screw (4)
6	Connector
7	Housing
8	Spacer (5-3/4 inch headlamp only)
9	Retainer (7-inch headlamp only)
10	Screw (3) (7-inch headlamp only)

Figure 1. Round Headlamp

Remove

1. See Figure 1. Remove screw (1).
2.

   NOTE

   Bezel is under pressure from isolators (3), disassemble slowly.

   Remove bezel (2).
3. Remove screws (5).
4. Remove retainer (6).
5. Remove headlamp (7).
6. Disconnect connector (11).
7. Remove ground strap screw (12)

Install

1.

   NOTE

   Check gasket (8) is properly installed on retainer.

   See Figure 1. Install retainer (6) to headlamp (7).
2. Position ground strap (10).
3. Install screw (12). Tighten.
   Torque: 8.8–10.8 N·m (6.5–8.0 ft-lbs) *Headlamp ground strap screw*
4. Connect connector (11).
5. Install headlamp (7).
6. Install screws (5). Tighten.
   Torque: 1.9–2.8 N·m (17–25 **in-lbs**) *Headlamp, nacelle mounted, retainer screw*
7. Install bezel (2). Insert gasket (8) behind lip of bezel.
8. Install screw (1). Tighten.
   Torque: 2.8–3.6 N·m (25–32 **in-lbs**) *Headlamp, nacelle mounted, bezel screw*

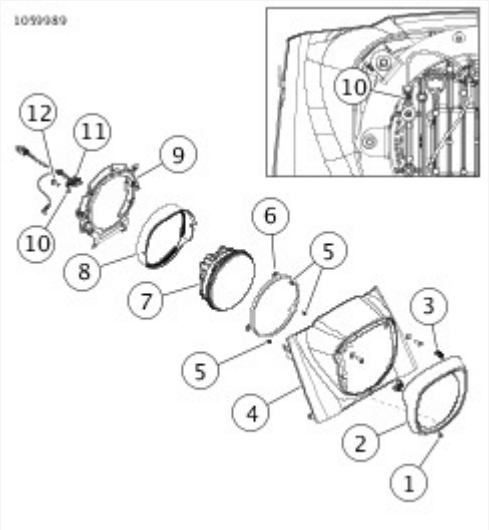

View interactive image

1	Screw
2	Bezel
3	Isolator (2)
4	Nacelle
5	Screw (3)
6	Retainer
7	Headlamp
8	Gasket
9	Mounting ring
10	Ground strap
11	Connector
12	Screw

Figure 1. Nacelle Mounted Headlamp

Remove

1. **FXDRS:** Remove fairing. See **Chassis → FAIRING**.
2. See **Figure 1**. Remove screw (3).
3. Remove headlamp (1).
4. Disconnect connector (2).

Install

1. See **Figure 1**. Connect connector (2).
2. Install headlamp (1).
3. Install screw (3). Tighten.
   Torque: 13.5–17.6 N·m (10–13 ft-lbs) *Headlamp (Oblong) mounting screw*
4. **FXDRS:** Install fairing. See **Chassis → FAIRING**.

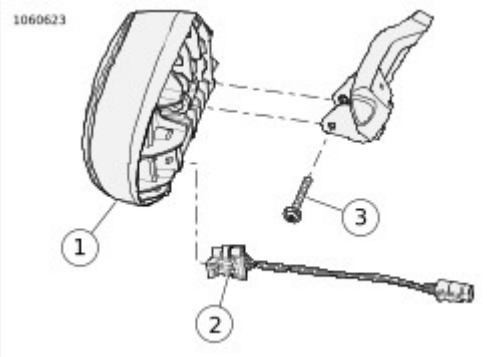

View interactive image

1	Headlamp
2	Connector
3	Screw

Figure 1. Oblong Headlamp

See **Electrical → HEADLAMP → Remove and Install: Horizontal**for bulb replacement.

1. Remove main fuse. See **Electrical → POWER DISCONNECT**.
2. Remove associated parts:

- **Round headlamp:** Remove fuel tank. See **Fuel and Exhaust → FUEL TANK**.
- **Model with windshield:** Remove windshield. See **Chassis → WINDSHIELD**.
- **Model with nacelle:** Remove nacelle. See **Chassis → HEADLAMP NACELLE**.
- **Model with fairing:** Remove fairing. See **Chassis → FAIRING**.

Remove

1. Disconnect headlamp connector. See **Electrical → FRONT ELECTRICAL CADDY**.
2. See **Figure 1**. Remove locknut (6) and flat washer (5).
3. Remove screw (2) and flat washer (3).
4. Remove headlamp (1).

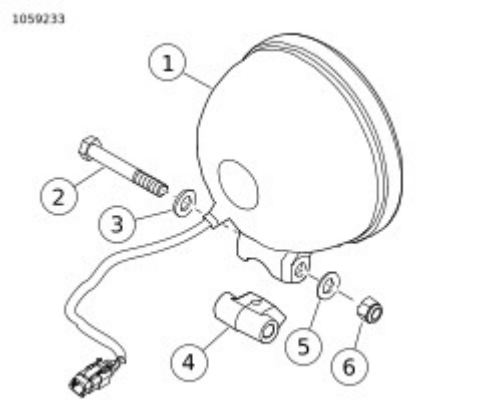

View interactive image

1	5 3/4 or 7-inch headlamp
2	Screw
3	Washer
4	Mounting bracket
5	Washer
6	Locknut

Figure 1. Round Headlamp (Typical)

Install

1. See **Figure 1**. Install headlamp (1).
2. Install screw (2) and flat washer (3).
3. Install flat washer (5) and locknut (6). Tighten.
   Torque: 36.6–43.3 N·m (27–32 ft-lbs) *Headlamp, round, locknut*
4. Connect headlamp connector. See **Electrical → FRONT ELECTRICAL CADDY**.

Remove

1. Remove nacelle. See **Chassis → HEADLAMP NACELLE**.
2. Remove headlamp. See Bulb Replacement in this section.
3. See **Figure 1**. Remove screw and washer (2).
4. Remove mounting ring (1).

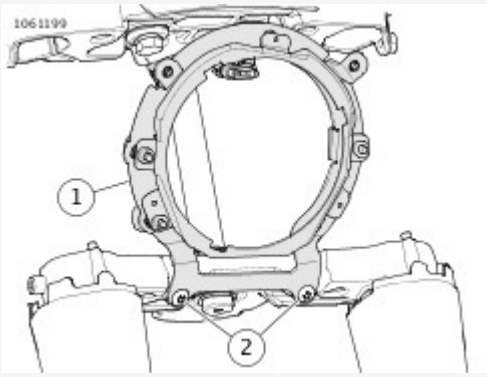

View interactive image

1	Mounting Ring
2	Screw and washer (2)

Figure 1. Headlamp Mounting Ring

Install

1. See **Figure 1**. Install mounting ring (1).
2. Install screw and washer (2). Tighten.
   Torque: 21.6–27.1 N·m (16–20 ft-lbs) *Headlamp mounting ring screw*
3. Install headlamp. See Bulb Replacement in this section.
4. Install nacelle. See **Chassis → HEADLAMP NACELLE**.

Remove

NOTE

FXDRS: To remove front lighting bracket assembly, see **Electrical → FRONT LIGHTING BRACKET**.

1. **FXBR, FXBRS:** See **Figure 1**. Remove clutch cable from wireform (5).
2. Disconnect connector (1).
3. **FXBR, FXBRS:** Remove headlamp assembly.
   a. Remove screws (2).
   b. Remove headlamp assembly.
   c. Remove screw and wireform (5), if necessary.
4. Remove headlight.
   a. Remove screw (3).
   b. Remove headlamp (4).
5. See **Figure 2**. Disassemble mounting bracket.
   a. Remove screws (5) and spacers (4).
   b. Discard isolators (3).

Install

1. See **Figure 2**. Assemble mounting bracket.
   a. Assemble bracket (1), **new** isolators (3) and clevis (2).
   b. Install spacers (4) and screws (5). Tighten.
      Torque: 3.7–4.8 N·m (3–4 ft-lbs) *Headlamp, oblong, isolator screws*
2. See **Figure 1**. Install headlamp to bracket.
   a. Install headlamp (4).
   b. Install screw (3). Tighten.
      Torque: 13.6–17.6 N·m (120–156 **in-lbs**) *Headlamp, oblong, mounting screw*
3. **FXBR, FXBRS:** Install headlamp assembly.
   a. Install wireform and screw (5), if removed. Tighten.
      Torque: 13.5–16.2 N·m (10–12 ft-lbs) *Wireform screw, headlamp, oblong,*
   b. Install headlamp assembly.
   c. Install screws (2). Tighten.
      Torque: 21.6–27.1 N·m (16–20 ft-lbs) *Headlamp, oblong, bracket-to-fork clamp screws*
4. Connect connector (1).
5. FXBR, FXBRS: Install clutch cable into wireform (5).

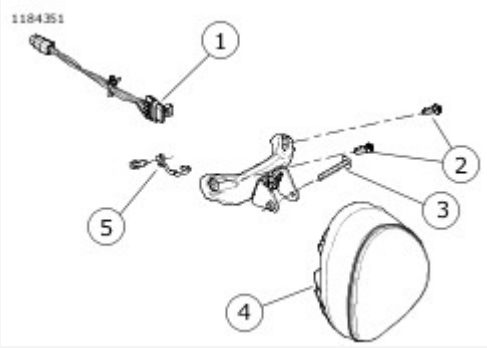

View interactive image

1	Connector
2	Screw (2)
3	Screw
4	Headlamp
5	Wireform and screw

Figure 1. Headlamp: FXBR, FXBRS (Typical)

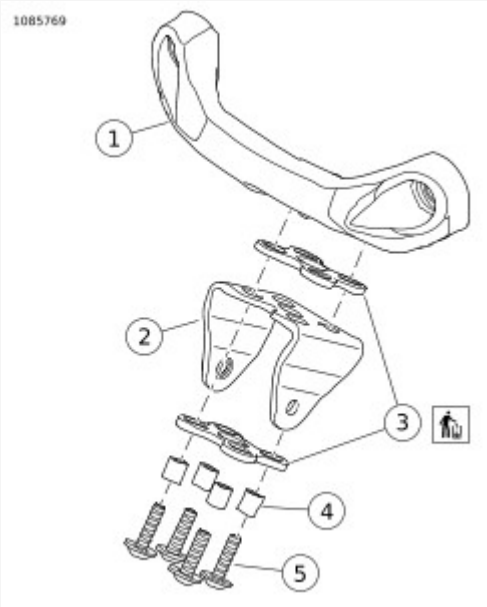

View interactive image

1	Mounting bracket (FXBR, FXBRS)
2	Mounting clevis
3	Isolator (2)
4	Spacer (4)
5	Screw (4)

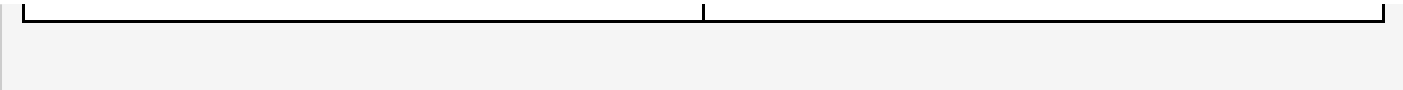

Figure 2. Oblong Headlamp Mounting Bracket (Typical)

Remove

1. See Figure 1. Remove screws (1).
2. Remove nacelle (2).
3. See Figure 2. Remove screws (1).
4. Disconnect connector (3).
5. Remove headlamp (2).

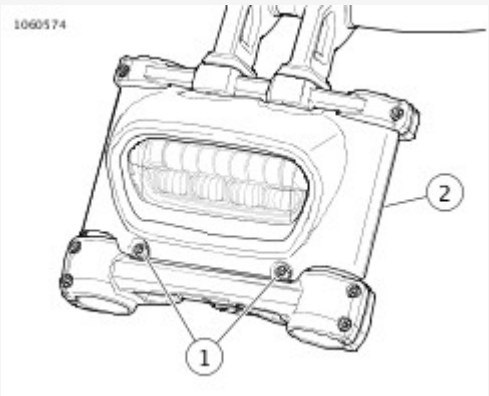

View interactive image

1	Screw (2)
2	Nacelle

Figure 1. Headlamp Nacelle

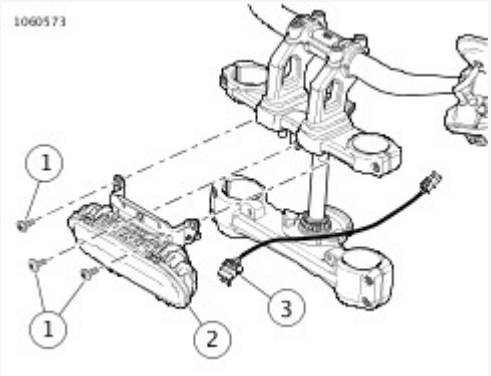

View interactive image

1	Screw (3)
2	Headlamp
3	Connector

Figure 2. Headlamp

Install

1. See **Figure 2**. Install headlamp (2).
2. Connect connector (3).
3. Install screws (1). Tighten.
   Torque: 15–19 N·m (11–14 ft-lbs) *Headlamp, upper triple clamp mounted, screw*
4. See **Figure 1**. Install nacelle (2).
5. Install screws (1). Tighten.
   Torque: 21.6–27.1 N·m (16–20 ft-lbs) *Headlamp nacelle, screw*

WARNING

The automatic-on headlamp feature provides increased visibility of the rider to other motorists. Be sure headlamp is on at all times. Poor visibility of rider to other motorists can result in death or serious injury. (00030b)

Prepare

1. Check tire pressure.
2. Adjust rear shock preload for rider and intended load.
3. Fill fuel tank or add an equal amount of ballast.

Check Alignment

1. See Figure 1. Park the motorcycle on a line (1) perpendicular to the wall.
2. Set vehicle distance from wall to front axle.
   Distance: 7.6 m (25 ft)
3. Draw a vertical centerline (2) on the wall aligned with line (1).
4.

   NOTE

   The upper lens half of LED is the low beam.

   With the motorcycle loaded, point the front wheel straight forward at wall.

   a. **All except FXFB/S:** Measure the distance (4) from the floor to the center of headlamp.
   b. **FXFB/S:** Measure the distance (4) from the floor to the center of low beam.
5. Draw a horizontal line (5) through vertical line (2) using the same height measurement as low beam bulb centerline (4).
6. Align the top of the hot spot to horizontal line (5) with headlamp set to low beam.
7. Adjust headlamp, if necessary.

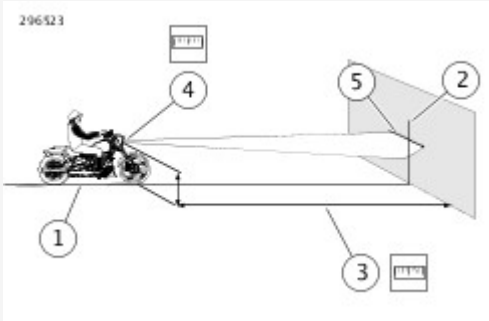

View interactive image

1	Perpendicular line
2	Vertical line
3	7.6 m (25 ft)
4	Low beam bulb centerline
5	Horizontal line

Figure 1. LED Headlamp Alignment

Round

1. **All except FLSB and FLSL:** See Figure 1. Loosen horizontal adjustment screw (2). Adjust headlamp horizontally to direct light beam straight ahead.
2. Tighten horizontal adjustment screw:
   a. **FLDE, FLHC:**
      Torque: 25–40.6 N·m (18–30 ft-lbs) *Headlamp FLDE, FLHC, FLSB horizontal adjustment screw*
   b. **FXBB, FXLR:**
      Torque: 29.8–37.9 N·m (22–28 ft-lbs) *Headlamp FXBB, FXLR horizontal adjustment screw*
3. Loosen vertical adjustment screw (1). Adjust headlamp vertically until beam centers on horizontal line.
4. Tighten vertical adjustment screw (1):
   Torque: 36.6–43.3 N·m (27–32 ft-lbs) *Headlamp FLDE, FLHC, FLSL, FXBB, FXLR, FLSB vertical adjustment screw*

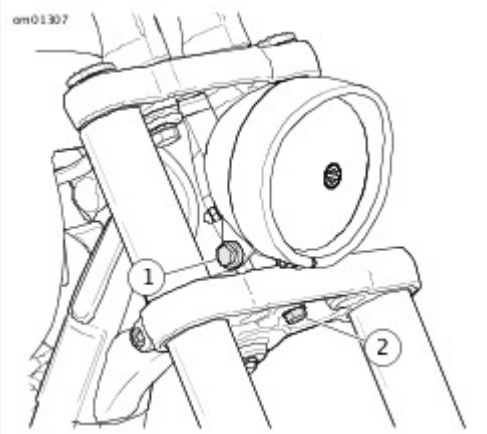

View interactive image

1	Vertical adjusting bolt
2	Horizontal adjusting bolt

Figure 1. Headlamp Adjustment

FXBR, FXBRS, FXDRS, FXFB, FXFBS

1. See Figure 2 and Figure 3. Loosen vertical adjustment screw (3). Adjust headlamp vertically until beam centers on horizontal line.
2. Tighten vertical adjustment screw (3):
   a. **FXBR, FXBRS, FXDRS** See Figure 2.
      Torque: 13.5–17.6 N·m (10–13 ft-lbs) *Headlamp FXBR, FXBRS, FXDRS vertical adjustment screw*

b. **FXFB, FXFBS** See Figure 3.
Torque: 14.9–19 N·m (11–14 ft-lbs) *Headlamp FXFB, FXFBS vertical adjustment screw*

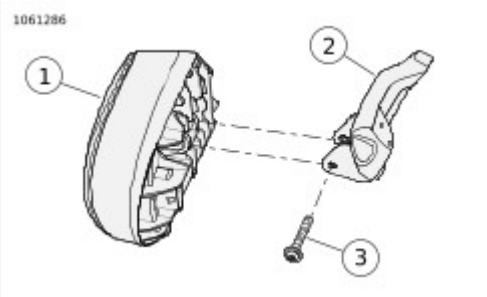

View interactive image

1	Headlamp
2	Mounting bracket (typical)
3	Screw

Figure 2. Headlamp Adjustment: FXBR, FXBRS, FXDRS

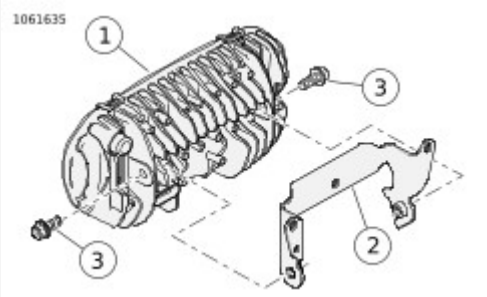

View interactive image

1	Headlamp
2	Mounting bracket
3	Screw (2)

Figure 3. Headlamp Adjustment: FXFB, FXFBS

FLFB/S

1. See Figure 4. Rotate horizontal adjustment screw (1). Adjust headlamp horizontally to direct light beam straight ahead.
2. Rotate vertical adjustment screw (2). Adjust headlamp vertically until beam centers on horizontal line.

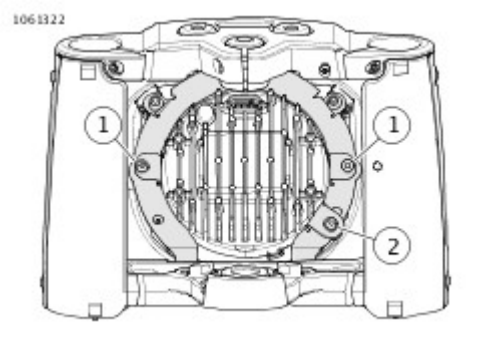

View interactive image

1	Horizontal adjustment screw
2	Vertical adjustment screw

Figure 4. Headlamp Adjustment

1. Install associated parts:

- **Round headlamp:** Install fuel tank. See **Fuel and Exhaust → FUEL TANK**.
- **Model with windshield:** Install windshield. See **Chassis → WINDSHIELD**.
- **Model with nacelle:** Install nacelle. See **Chassis → HEADLAMP NACELLE**.
- **Model with fairing:** Install fairing. See **Chassis → FAIRING**.

2. Install main fuse. See **Electrical → POWER DISCONNECT**.

> **WARNING**
>
> Be sure that all lights and switches operate properly before operating motorcycle. Low visibility of rider can result in death or serious injury. (00316a)

3. Test headlamp for proper operation.
4. Align headlamp. See Align in this section.

1. Remove main fuse. See **Electrical → POWER DISCONNECT**.
2. Remove fairing. See **Chassis → FAIRING**.
3. Remove fuel tank. See **Fuel and Exhaust → FUEL TANK**.
4. Disconnect front turn signal connectors. See **Electrical → FRONT ELECTRICAL CADDY**.
5. Disconnect headlamp connector. See **Electrical → HEADLAMP**.
6. Disconnect IM connector. See **Electrical → INSTRUMENT MODULE (IM)**.

1. See **Electrical → FRONT LIGHTING BRACKET → Install → Front Lighting Bracket**. Remove front lighting bracket.
   a. Remove screws (1).
   b. Remove bracket (2).

1. See **Figure 1**. Install bracket.
   a. Install bracket (2).
   b. Install screws (1). Tighten.
      Torque: 21.7–27.1 N·m (16–20 ft-lbs) *Lighting, Front, Bracket screws (FXDRS)*

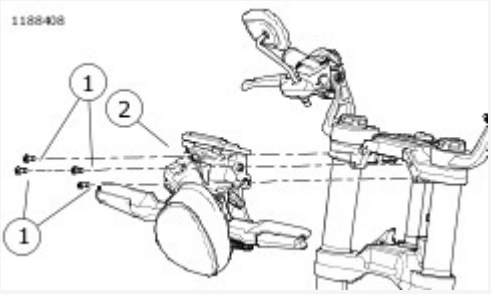

View interactive image

1	Screw (4)
2	Bracket

Figure 1. Front Lighting Bracket

1. Connect IM connector. See **Electrical → INSTRUMENT MODULE (IM)**.
2. Conncect headlamp connector. See **Electrical → HEADLAMP**.
3. Connect turn signal connectors. See **Electrical → FRONT ELECTRICAL CADDY**.
4. Install fuel tank. See **Fuel and Exhaust → FUEL TANK**.
5. Install fairing.
6. Install main fuse. See **Electrical → POWER DISCONNECT**.

Prepare

1. Remove main fuse. See **Electrical → POWER DISCONNECT**.
2. Remove fuel tank. See **Fuel and Exhaust → FUEL TANK**.

Remove

1. Disconnect right and left turn signal connectors. See Electrical → FRONT ELECTRICAL CADDY.
2. See Figure 1. Remove screws (1).
3. Remove light bar.

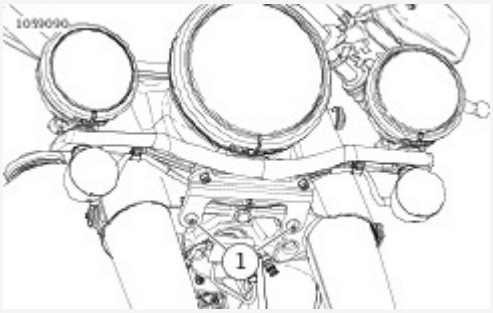

View interactive image

1	Screw (2)

Figure 1. Front Light Bar

Disassemble

1. See Figure 2. Discard cable strap (3).
2. Remove screws (2) and bracket (1).
3. Remove auxiliary lamp housings. See Electrical → AUXILIARY LAMPS.
4. See Figure 3. Remove screws (1) and clamps (2).
5. Remove left and right turn signals (3, 4).

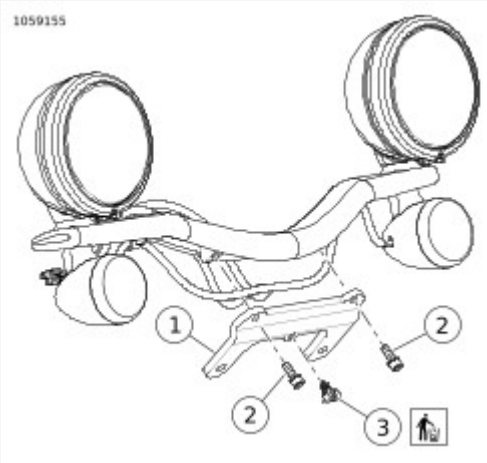

View interactive image

1	Bracket
2	Screw (2)
3	Cable strap

Figure 2. Light Bar Bracket

View interactive image

1	Screw (2)
2	Clamp (2)
3	Left turn signal
4	Right turn signal

Figure 3. Light Bar Disassembly

Assemble

1. See Figure 3. Install left and right turn signals (3, 4).
2. Install screws (1) and clamps (2). Tighten.
   Torque: 0.67–1.1 N·m (6–10 **in-lbs**) *Front light bar, clamp screw*
3. Install auxiliary lamp housings. See Electrical → AUXILIARY LAMPS.
4. See Figure 2. Install screws (2) and bracket (1). Tighten.
   Torque: 21.7–27.1 N·m (16–20 ft-lbs) *Front light bar, bracket screw*
5. Install **new** cable strap (3).

Install

1. Install light bar.
2. See **Figure 1**. Install screws (1). Tighten.
   Torque: 27.1–33.9 N·m (20–25 ft-lbs) *Front light bar mounting screw*
3. Connect right and left turn signal connectors. See **Electrical → FRONT ELECTRICAL CADDY**.

Remove

1. Disconnect right and left turn signal connectors. See **Electrical → FRONT ELECTRICAL CADDY**.
2. See **Figure 1**. Remove screws (1).
3. Remove light bar.

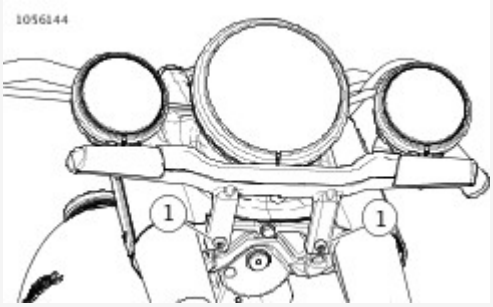

View interactive image

1	Screw (2)

Figure 1. Lightbar Assembly

Disassemble

1. Remove LED turn signals. See **Electrical → FRONT TURN SIGNAL LAMPS**.
2. Disconnect and remove harness from light bar.
3. Remove auxiliary lamp housings. See **Electrical → AUXILIARY LAMPS**.

Assemble

1. Install auxiliary lamp housings. See **Electrical → AUXILIARY LAMPS**.
2. Install and connect harness to light bar. See electrical diagnostic manual.
3. Install LED turn signals. See **Electrical → FRONT TURN SIGNAL LAMPS**.

Install

1. Install light bar.
2. See **Figure 1**. Install screws (1). Tighten.
   Torque: 27.1–33.9 N·m (20–25 ft-lbs) *Front light bar mounting*

screw

3. Connect right and left turn signal connectors. See **Electrical → FRONT ELECTRICAL CADDY**.

Complete

1. Install fuel tank. See **Fuel and Exhaust → FUEL TANK**.
2. Install main fuse. See **Electrical → POWER DISCONNECT**.

Bulb

Remove

1. See Figure 1. Remove screw (1) and nut (2).
2. Remove bezel (3).
3. Remove LED lamp (4).
4. Disconnect connector (5).

Install

1. See Figure 1. Connect connector (5).
2. Install LED lamp (4) in alignment ring (6).
3. Install bezel (3).
4. Install screw (1) and nut (2). Tighten.
   Torque: 0.67–1.12 N·m (6–10 **in-lbs**) *Auxiliary lamp bezel nut*

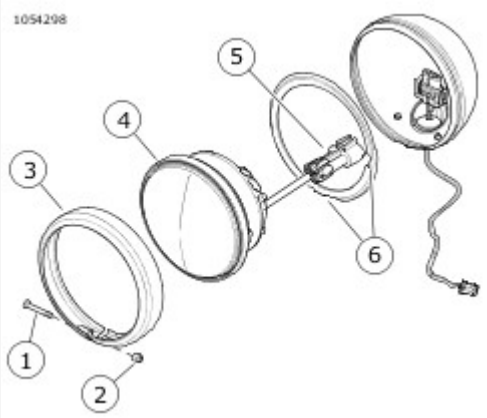

View interactive image

1	Screw
2	Nut
3	Bezel
4	LED Lamp
5	Connector
6	Alignment ring

Figure 1. LED Auxiliary Lamp

1. Remove main fuse. See **Electrical → POWER DISCONNECT**.
2. Remove bulb. See **Electrical → AUXILIARY LAMPS → Bulb Replacement**.

Remove

1. See Figure 1. Disconnect pins (4) from connector (2).
2. Remove nut (3).
3. Remove housing (1).

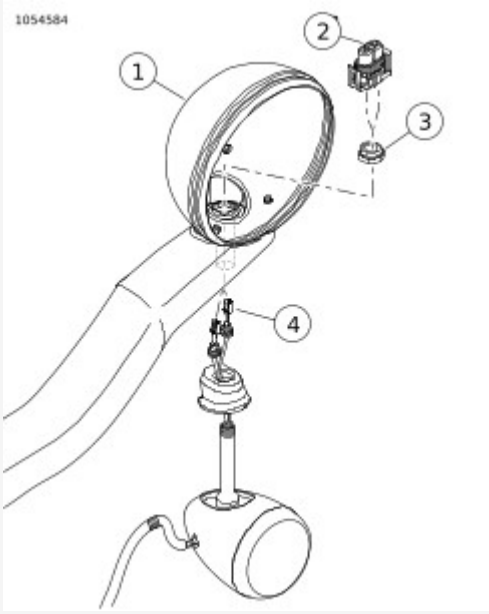

View interactive image

1	Housing
2	Connector
3	Nut
4	Pin (2)

Figure 1. Auxiliary Lamp Housing with Incandescent Signal

Install

1. See Figure 1. Install housing (1).
2. Position housing. Install nut (3) and tighten.
   Torque: 20.3–24.4 N·m (15–18 ft-lbs) *Auxiliary lamp nut*
3. Connect pins (4) to connector (2). See electrical diagnostic manual.
4. Align auxiliary lamps. See Align in this section.

Remove

1. See Figure 1. Disconnect pins (3) from connector (2).
2. Remove nut (6), lockwasher (5), and swivel clamp (4).
3. Remove housing (1).

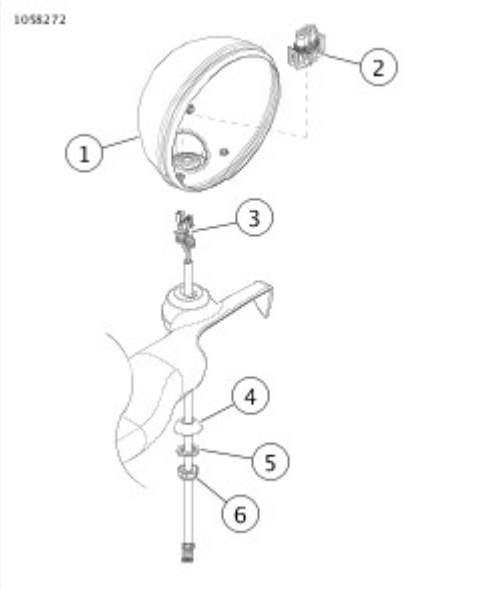

View interactive image

1	Housing
2	Connector
3	Pin (2)
4	Clamp
5	Lockwasher
6	Nut

Figure 1. Auxiliary Lamp Housing with LED Signal

Install

1. See Figure 1. Install housing (1).
2. Position housing. Install swivel clamp (4), lockwasher (5), and nut (3). Tighten.
   Torque: 20.3–24.4 N·m (15–18 ft-lbs) *Auxiliary lamp nut*
3. Connect pins (3) to connector (2). See electrical diagnostic manual.
4. Align auxiliary lamps. See Align in this section.

Check Alignment

1. Place vehicle facing target wall as described in Align section of Headlamp. See **Electrical → HEADLAMP**.
2. Check headlamp alignment. Adjust if necessary.

Auxiliary Lamp Adjustment

NOTE

Have a person weighing roughly the same as the principal rider sit on the motorcycle.

1. With the vehicle upright and a rider seated on the motorcycle, measure the distance from the floor to the centerline of each auxiliary lamps.
2. See Figure 1. Mark the center of the headlamp high beam by making a vertical line through the horizontal line already drawn on the wall. Properly adjusted, the beam should project an equal area of light to the left and right of the vertical centerline (1).
3. Measure the horizontal distance from the headlamp vertical centerline to the vertical centerline of each auxiliary lamp.
4. Mark the auxiliary lamp horizontal and vertical centerline (2, 3) on the wall.
5. **FLDE** Adjust auxiliary lamps.
   a. See Figure 2. Using flare nut socket loosen nut (6).
   b. Adjust auxiliary lamp.
   c. Tighten nut (6).
   Torque: 20.3–24.4 N·m (15–18 ft-lbs) *Auxiliary lamp nut (FLDE)*
6.

   NOTE

   Minimize auxiliary lamp movement while tightening to maintain alignment.

   FLHC Adjust auxiliary lamps.
   a. Remove bulb. See Auxiliary Lamps in this section.
   b. See Figure 3. Loosen nut (3).
   c. Adjust housing (1).
   d. While holding auxiliary lamp housing (1) steady, tighten nut (3)
   Torque: 25.7–31.1 N·m (19–23 ft-lbs) *Auxiliary lamp nut (FLHC)*
   e. Install bulb. See Auxiliary Lamps in this section.
7. Verify auxiliary lamp alignment.

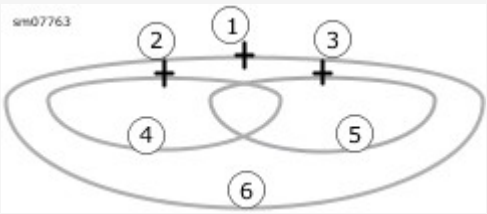

View interactive image

1	Headlamp centerline
2	Left auxiliary lamp centerline
3	Right auxiliary lamp centerline
4	Left auxiliary lamp beam area
5	Right auxiliary lamp beam area
6	Headlamp low beam area

Figure 1. Headlamp Pattern: LED Type with Auxiliary Lamps

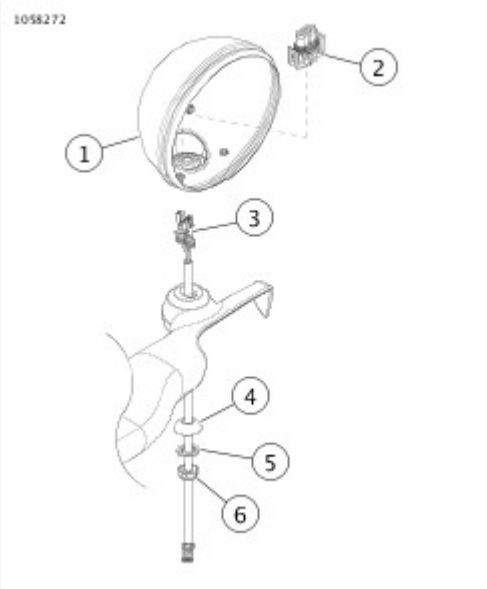

View interactive image

1	Housing
2	Connector
3	Pin (2)
4	Clamp
5	Lockwasher
6	Nut

Figure 2. Auxiliary Lamp Housing with LED Signal

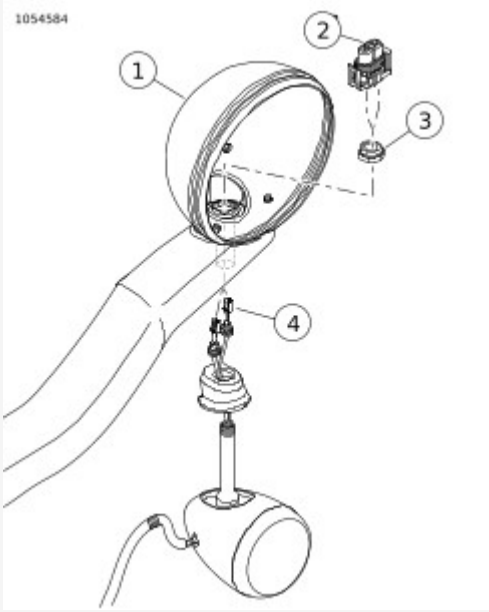

View interactive image

1	Housing
2	Connector
3	Nut
4	Pin (2)

Figure 3. Auxiliary Lamp Housing with Incandescent Signal

1. Install bulb. See **Electrical → AUXILIARY LAMPS → Bulb Replacement**.
2. Install main fuse. See **Electrical → POWER DISCONNECT**.

> **WARNING**
>
> Be sure that all lights and switches operate properly before operating motorcycle. Low visibility of rider can result in death or serious injury. (00316a)

3. Check operation of all lamps.

Incandescent

1. See Figure 1. Replace bulb.
   a. Remove lens.
   b. Replace bulb.
   c. Install lens.

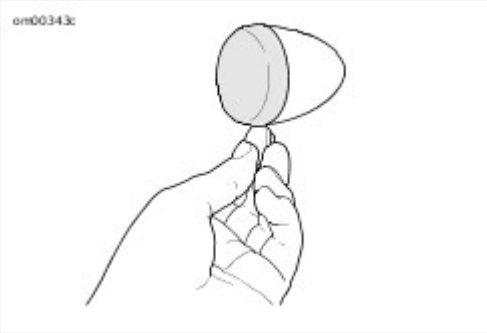

View interactive image

Figure 1. Remove Lens

LED: Front Lighting Bracket Mount

Remove

1. See Figure 2. Remove upper turn signal housing.
   a. Remove screws (5).
   b. Remove upper housing (3).
2. Remove trurn signal bulb.
   a. Remove screws (1, 2).
   b. Disconnect electrical connector from bulb.
   c. Remove bulb (4).

Install

1. See Figure 2. Install turn signal bulb.
   a. Connect electrical connector to bulb.
   b. Install bulb (4).
   c. Install screws (1, 2). Tighten.
      Torque: 2.9–3.8 N·m (26–34 **in-lbs**) *Turn signal, front, bulb screws (FXDRS)*
2. Install upper turn signal housing.
   a. Install upper housing (3).
   b. Install scews (5).
      Torque: 1.2–1.6 N·m (11–14 **in-lbs**) *Turn signal, front,*

housing screws (FXDRS)

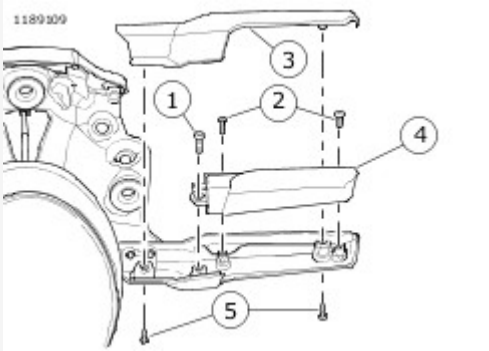

View interactive image

1	Screw
2	Screw (2)
3	Upper housing
4	Bulb
5	Screw (2)

Figure 2. LED Turn Signal Bulb

LED: Light Bar Mount

Remove

1. See Figure 3. Remove screws (1).

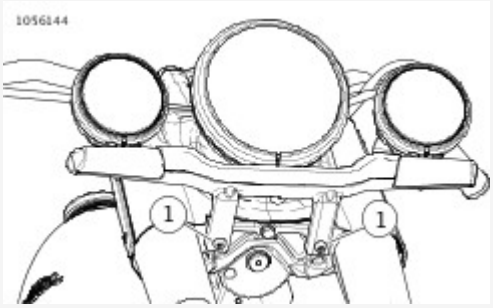

View interactive image

1	Screw (2)

Figure 3. Lightbar Assembly

2. Support lightbar assembly.
3. See **Figure 4**. Remove screws (1).
4. Remove cover (2).

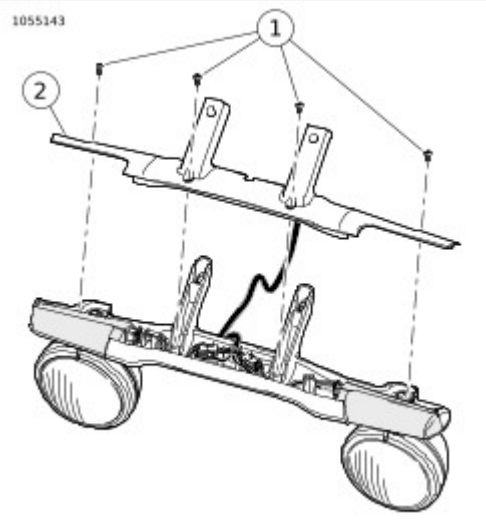

View interactive image

1	Screw (4)
2	Cover

Figure 4. Lightbar Cover

5. See **Figure 5**. Remove screw (1).
6. Remove LED signal (3 or 4).
7. Disconnect connector (2).

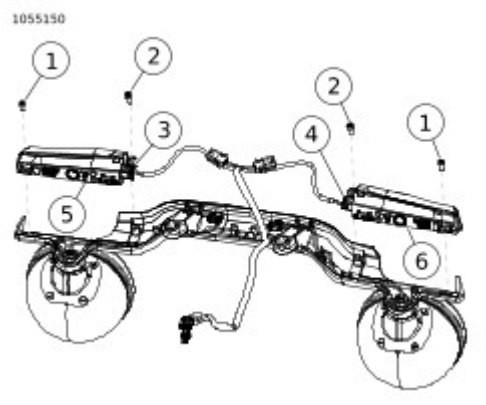

View interactive image

1	Screw (2)
2	Connector
3	LED, left

4	LED, right

Figure 5. Lightbar LED Signal

Install

1. See **Figure 5**. Connect connector (2).
2. Install LED signal (3 or 4).
3. Install screw (1). Tighten.
   Torque: 2.25–3.2 N·m (20–28 **in-lbs**) *LED signal screw*
4. See **Figure 4**. Install cover (2).
5. Install screws (1). Tighten.
   Torque: 2.25–3.2 N·m (20–28 **in-lbs**) *Lightbar, front, cover screw*
6. Install lightbar assembly.
7. See **Figure 3**. Install screws (1). Tighten.
   Torque: 27.1–33.9 N·m (20–25 ft-lbs) *Lightbar, front, screw*

Prepare

1. Remove main fuse. See **Electrical → POWER DISCONNECT**.
2. Remove fuel tank. See **Fuel and Exhaust → FUEL TANK**.

Remove

1. See Figure 1. Remove front turn signals.
   a. Loosen set screw (7).
   b. Loosen locknut (3) and remove ball stud (6) from turn signal.
2. Remove hand control module from handlebar.
   a. Left hand control module: See Electrical → LEFT HAND CONTROL MODULE (LHCM).
   b. Right hand control module: See Electrical → RIGHT HAND CONTROL MODULE (RHCM).
3. Disconnect left or right turn signal connector. See Electrical → FRONT ELECTRICAL CADDY.
4.

   NOTE

   Verify that there is enough scrap wire to work both ends of handlebar when wiring is routed through handlebar.

   Route turn signal wires through handlebar.
   a. Attach scrap wire to turn signal connector.
   b. Pull turn signal wiring through handlebar.
   c. Disconnect scrap wire from old turn signal connector. Attach scrap wire to new turn signal wiring.

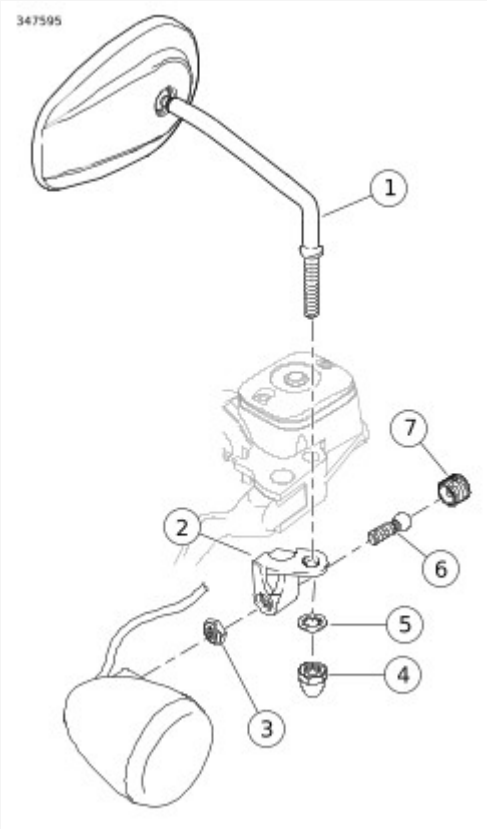

View interactive image

1	Mirror
2	Turn signal bracket
3	Locknut
4	Acorn nut
5	Lockwasher
6	Ball stud
7	Set screw

Figure 1. Front Turn Signals

Install

1. **NOTE**

   Verify that there is enough scrap wire to work both ends of handlebar when wiring is routed through handlebar.

   Route turn signal wires through handlebar.

   a. Disconnect scrap wire from old turn signal connector. Attach scrap wire to new turn signal wiring.

   b. Pull new turn signal wiring through handlebar.

   c. Remove scrap wire.

2. Install hand control module to handlebar.

   a. Left hand control module: See **Electrical → LEFT HAND CONTROL MODULE (LHCM)**.

   b. Right hand control module: See **Electrical → RIGHT HAND CONTROL MODULE (RHCM)**.

3. Connect left or right turn signal connector. See **Electrical → FRONT ELECTRICAL CADDY**.

4. See **Figure 1**. Install front turn signal.

   NOTE

   When installing right side turn signal assembly, do not cover brake lever pivot pin.

   a. Install ball stud (6) to turn signal and tighten locknut (3).
   Torque: 5.6–7.9 N·m (50–70 **in-lbs**) *Handlebar-mounted turn signal, ball stud locknut*

   b. Tighten set screw (7).
   Torque: 4–6.7 N·m (3–5 ft-lbs) *Handlebar-mounted turn signal, ball stud set screw*

   c. Verify turn signal is positioned properly.

Remove

1. Disconnect turn signal lamp connector. See Electrical → FRONT ELECTRICAL CADDY.
2. See Figure 1. Remove turn signal lamp.
   a. Remove screws (2).
   b. Remove lamp (1).

Install

1. Install turn signal lamp.
   a. Install lamp (1).
   b. Install screws (2). Tighten.
      Torque: 2.7–3.4 N·m (24–30 **in-lbs**) *Turn signal, front, lamp screws (FXDRS)*
2. Install turn signal lamp connector. See Electrical → FRONT ELECTRICAL CADDY.

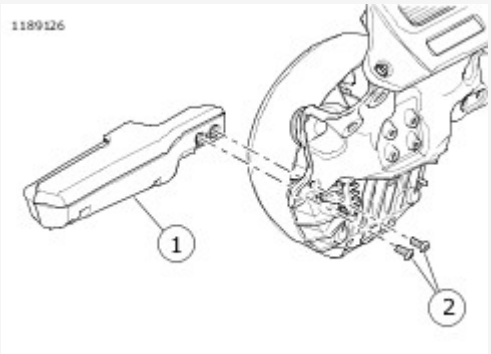

View interactive image

1	Lamp
2	Screw (2)

Figure 1. LED Trun signal Lamp

Incandescent

1. See **Electrical → FRONT LIGHT BAR**.

LED

1. See Bulb Replacement in this section.

Complete

1. Remove fuel tank. See **Fuel and Exhaust → FUEL TANK**.
2. Install main fuse. See **Electrical → POWER DISCONNECT**.

> **WARNING**
>
> Be sure that all lights and switches operate properly before operating motorcycle. Low visibility of rider can result in death or serious injury. (00316a)

3. Check operation of all lamps.

Incandescent

1. See Figure 1. Replace bulb.
   a. Remove lens.
   b. Replace bulb.
   c. Install lens.

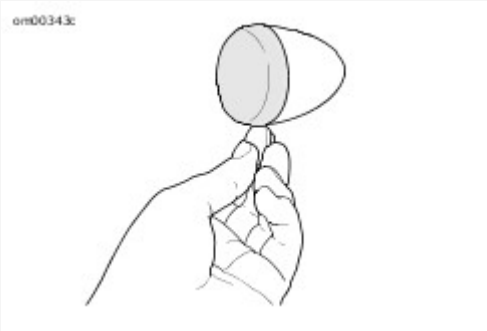

View interactive image

Figure 1. Remove Lens

LED Rear Lighting Assembly

Remove

1. See Figure 2. Separate rear lighting assembly.
   a. Remove screws (2, 3).
   b. Remove upper housing (1).
2. See Figure 3. Remove turn signal bulb.
   a. Remove screws (1, 2).
   b. Disconnect electrical connector.
   c. Remove bulb (3).
3. See Figure 4. Remove tail lamp bulb, if necessary.
   a. Remove screw (2).
   b. Disconnect electrical connector.
   c. Remove bulb (1).

Install

1. See Figure 4. Install tail lamp bulb, if removed.
   a. Install bulb (1).
   b. Connect electrical connector.
   c. Install screw (2). Tighten.
      Torque: 8.1–9.5 N·m (72–84 **in-lbs**) *Tail lamp bulb screw (FXDRS)*

2. See **Figure 3**. Install turn signal bulb.
   a. Install bulb (3).
   b. Connect electrical connector.
   c. Install screws (1, 2). Tighten.
      Torque: 1.2–1.6 N·m (11–14 **in-lbs**) *Turn signal bulb screw, small (FXDRS)*
      Torque: 2.7–3.8 N·m (24–34 **in-lbs**) *Turn signal bulb screw, large (FXDRS)*
3. See **Figure 2**. Assemble rear lighting assembly.
   a. Install upper housing (1).
   b. Install screws (2, 3). Tighten.
      Torque: 1.2–1.6 N·m (11–14 **in-lbs**) *Lighting assembly, rear, screws, small (FXDRS)*
      Torque: 4.1–5.4 N·m (36–48 **in-lbs**) *Lighting assembly, rear, screws, large (FXDRS)*

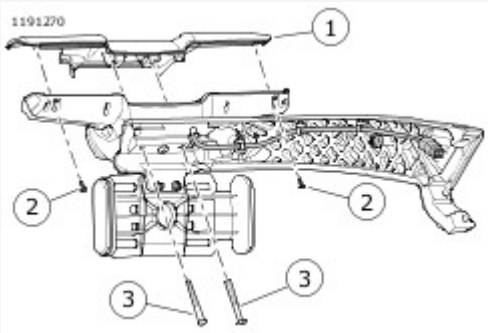

View interactive image

1	Upper housing
2	Outer screw (2)
3	Inner screw (2)

Figure 2. Rear Lighting Assembly

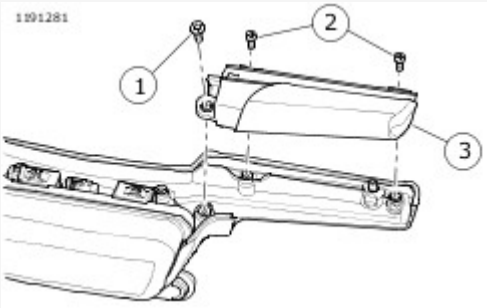

View interactive image

1	Screw
2	Screw (2)

3	Bulb

Figure 3. Rear Turn Signal Bulb

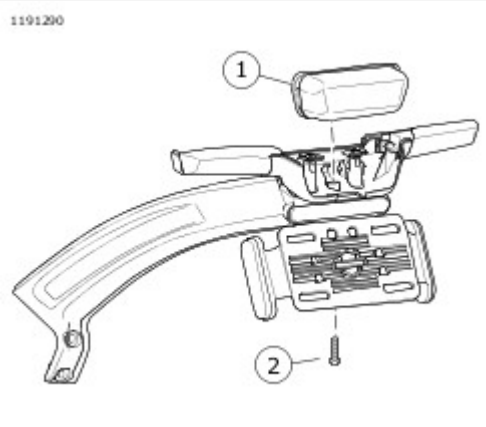

View interactive image

1	Bulb
2	Screw

Figure 4. Tail Lamp Bulb

LED Rear Light Bar

Remove

1. Remove rear turn signal lamp assembly. See **Electrical → REAR TURN SIGNAL LAMPS → Remove and Install: Light Bar Mount**.
2. See **Figure 5**. Remove bottom cover.
   a. Remove screws (1, 2).
   b. Remove cover (3).

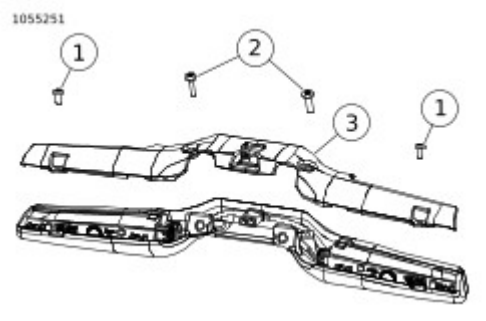

View interactive image

1	Screw, narrow (2)
2	Screw, wide (2)
3	Bottom cover

Figure 5. Lightbar Bottom Cover

3. See Figure 6. Remove LED signal.
   a. Remove screws (1, 2).
   b. Remove turn signal LED (5 or 6).
   c. Disconnect connector (3 or 4).

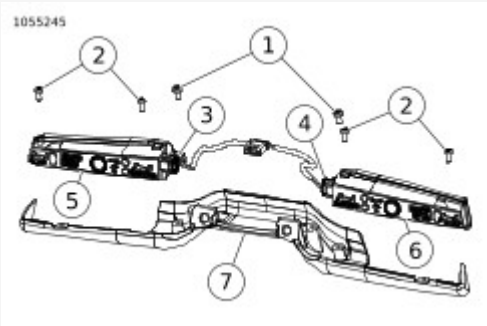

View interactive image

1	Long screw (2)
2	Short screw (4)
3	Grey connector
4	Black connector
5	LED, left
6	LED, right
7	Lightbar, top

Figure 6. LED Turn Signal

Install

1. See Figure 6. Install LED signal.
   a. Install turn signal LED (5 or 6).
   b. Connect connector (3 or 4).
   c. Install screw (1).
      Torque: 2.5–2.9 N·m (22–26 **in-lbs**) *LED signal screw*
   d. Install screws (2).
      Torque: 4.3–4.7 N·m (38–42 **in-lbs**) *LED signal screw*
2. See Figure 5. Install bottom cover.

a. Install cover (3).
b. Install screws (2).
   Torque: 5.4–5.9 N·m (48–52 **in-lbs**) *Rear lightbar bottom cover screw*
c. Install screws (1).
   Torque: 4.3–4.7 N·m (38–42 **in-lbs**) *Rear lightbar bottom cover screw*

3. Install rear turn signal lamp assembly. See **Electrical → REAR TURN SIGNAL LAMPS → Remove and Install: Light Bar Mount**.

LED Puck

Remove

1. See **Figure 7**. Remove lens (1).
2. Remove LED assembly (3).
3. Disconnect connector (4).

Install

1. Connector connector (4).
2. Align LED assembly (3) to housing. Press evenly until fully seated.
3. Inspect gasket (2) on lens (1). Replace if needed.
4. Install lens (1) with removal notch at the bottom.

WARNING

Be sure that all lights and switches operate properly before operating motorcycle. Low visibility of rider can result in death or serious injury. (00316a)

5. Check operation of all lamps.

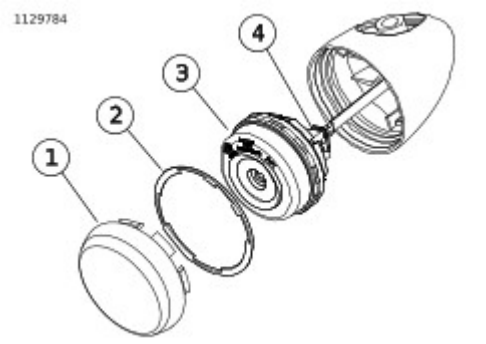

View interactive image

1	Lens
2	Gasket
3	LED assembly
4	Connector

Figure 7. LED Turn Signal Lamp

1. Remove main fuse. See **Electrical → POWER DISCONNECT**.
2. **All but FXDRS:** Remove seat. See **Chassis → SEAT**.
3. **All but FXDRS:** If removing both turn signals, remove rear fender. See **Chassis → REAR FENDER**.
4. **FXDRS:** Remove rear lighting bracket. See **Chassis → REAR LIGHTING BRACKET**.

Remove

1. See Figure 1. Disconnect connector(s).
   a. **Right Signal:** Disconnect connector (1).
   b. **Left Signal:** Disconnect connectors (2, 3).
2. See Figure 2. Remove fender support.
   a. Remove screws (2).
   b. Remove screws (4) and washers (3).
   c. Remove fender support (1).
3. See Figure 3. Remove harness.
   a. Remove and discard wire retention pads (1).
   b. Remove harness (2).
4. See Figure 4. Disassemble turn signal.
   a. **Left Signal:** Remove screw (1) and washer (2). Disassemble license plate mounting support (3), lamp mounting support (4) and turn signal (5).
   b. **Right Signal:** Remove screw (6) and washer (7). Disassemble lamp mounting support (8) and turn signal (9).

Install

1. See Figure 4. Assemble turn signal.
   a. **Left Signal:** Assemble license plate mounting support (3), lamp mounting support (4) and turn signal (5). Install screw (1) and washer (2). Tighten.
   Torque: 20–24 N·m (15–18 ft-lbs) *Rear Turn Signal, Fender Mount, Screw*
   b. **Right Signal:** Assemble lamp mounting support (8) and turn signal (9). Install screw (6) and washer (7). Tighten.
   Torque: 20–24 N·m (15–18 ft-lbs) *Rear Turn Signal, Fender Mount, Screw*
2. See Figure 3. Install harness.
   a. Route harness (2) through fender support (3).
   b. Install **new** wire retention pads (1).
3. See Figure 2. Install fender support.
   a. Install fender support (1), washers (3) and screws (4). Tighten.
   Torque: 57–62 N·m (42–46 ft-lbs) *Fender Support, Screw*
   b. Install screws (2). Tighten.
   Torque: 28–37 N·m (21–27 ft-lbs) *Rear Turn Signal, Fender Support, Screw*
4. See Figure 1. Connect connector(s).
   a. **Right Signal:** Connect connector (1).
   b. **Left Signal:** Connect connectors (2, 3).

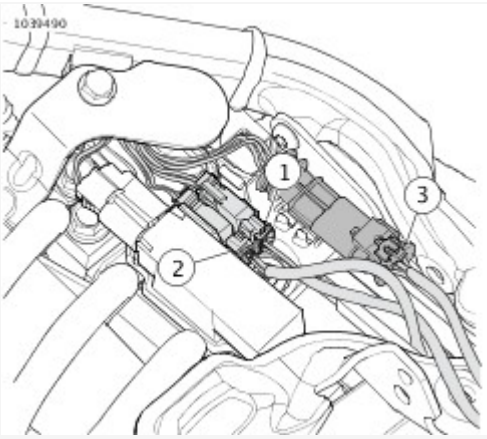

View interactive image

1	Right lamp connector
2	Left lamp connector
3	License plate light connector

Figure 1. Turn Signal Lamp Connectors

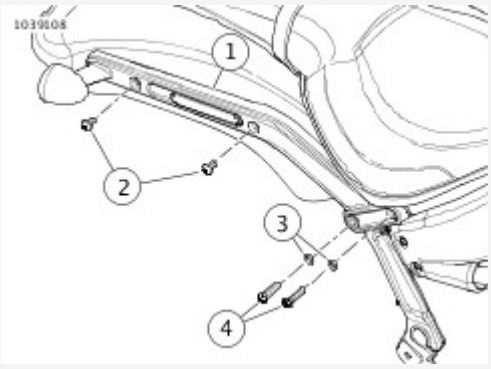

View interactive image

1	Fender support
2	Screw (2)
3	Washer (2)
4	Screw (2)

Figure 2. Right Fender Support

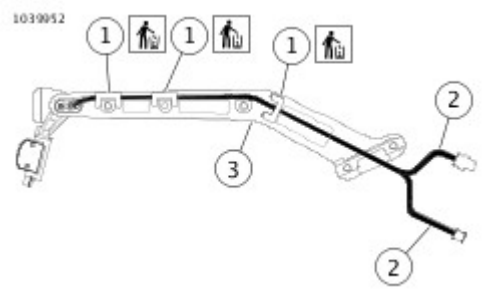

View interactive image

1	Wire retention pads (3)
2	Harness (2)
3	Fender support

Figure 3. Left Fender Support

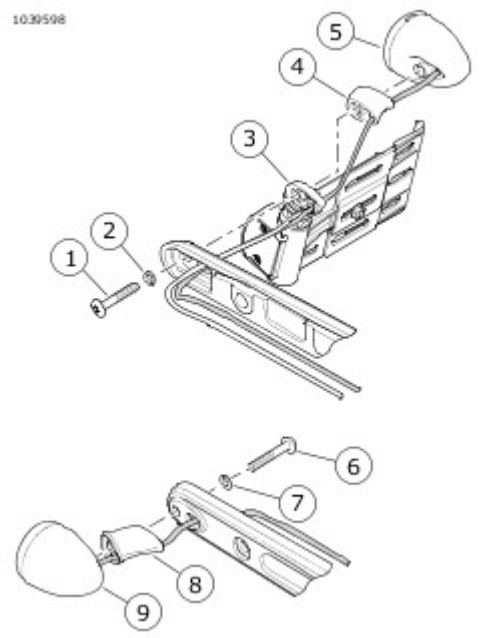

View interactive image

1	Screw
2	Washer
3	License plate mounting support
4	Lamp mounting support
5	Left turn signal housing
6	Screw
7	Washer

8	Lamp mounting support
9	Right turn signal housing

Figure 4. Turn Signal Assembly

Remove

1. See Figure 1. Detach wiring.
   a. Discard cable straps (4).
2. Remove rear lighting assembly.
   a. Remove outer screws (1).
   b. Remove inner screws (2).
   c. Remove center screw (3).
   d. Remove rear lighting assembly.

Install

1. See Figure 1. Install rear lighting assembly.
   a. Install rear lighting assembly.
   b. Install center screw (3). Tighten.
      Torque: 8.1–9.5 N·m (72–84 **in-lbs**) *Tail lamp bulb screw (FXDRS)*
   c. Install lower screws (2). Tighten.
      Torque: 2.7–3.8 N·m (24–34 **in-lbs**) *Lighting assembly, rear, screws, large (FXDRS)*
   d. Install upper screws (1). Tighten.
      Torque: 2.7–5.4 N·m (24–48 **in-lbs**) *Lighting assembly, rear, screws, medium (FXDRS)*
2. Attach wiring.
   a. Secure wiring to rear lighting bracket using **new** cable straps (4).

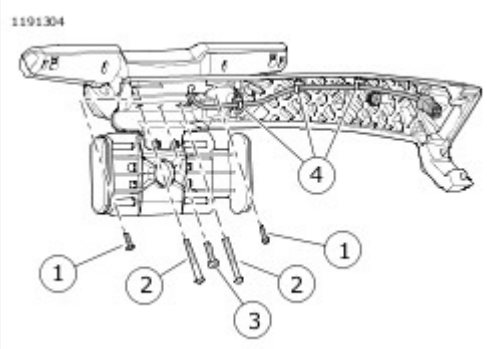

View interactive image

1	Outer screw (2)
2	Inner screw (2)
3	Center screw
4	Cable strap (3)

Figure 1. Rear Lighting Assembly

Remove

1. See Figure 1 or Figure 2. Remove screws (1).
2. Disconnect connector(s) (2).
3. Remove light bar (3).

Install

1. See Figure 1 or Figure 2. Position light bar (3).
2. Connect connector(s) (2).
3. Install screws (1). Tighten.
   Torque: 22–27 N·m (16–20 ft-lbs) *Rear Turn Signal, Light Bar Mount, Screw*

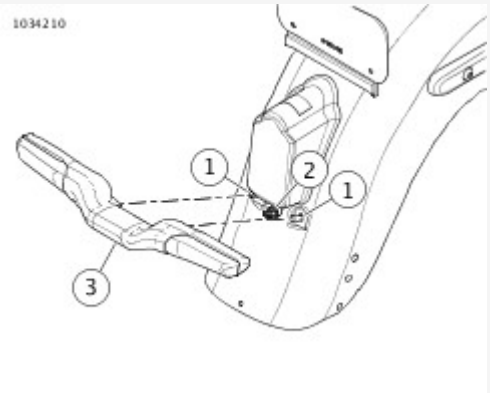

View interactive image

1	Screw (2)
2	Connector
3	Light Bar

Figure 1. LED Light Bar

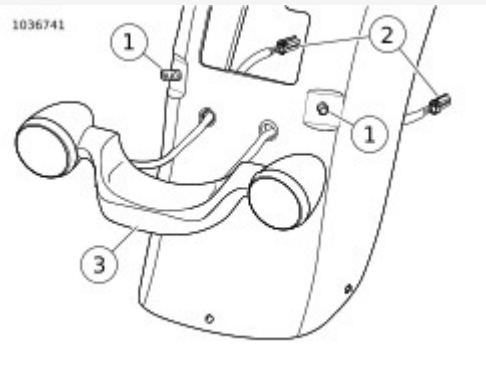

View interactive image

1	Screw (2)
2	Connector (2)
3	Light Bar

Figure 2. Incandescent Light Bar

Remove

1. See Figure 1. Disconnect connectors (1-3).
2. Disconnect pins from 4-pin connector (1 or 2). See electrical diagnostic manual.
3. Remove and disassemble rear fender. See Chassis → REAR FENDER.
4. See Figure 2. Remove wire harness (2) from support bracket assembly (1) and license plate holder (3).
5. Disassemble left or right turn signal.
   a. Remove screw and washer (4).
   b. Disassemble signal mounting support (5) and turn signal housing (6).

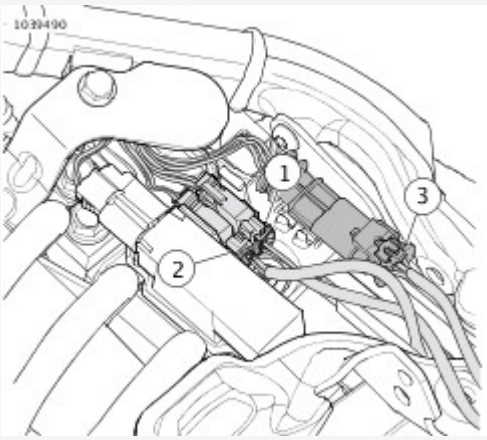

View interactive image

1	Right lamp connector
2	Left lamp connector
3	License plate light connector

Figure 1. Turn Signal Lamp Connectors

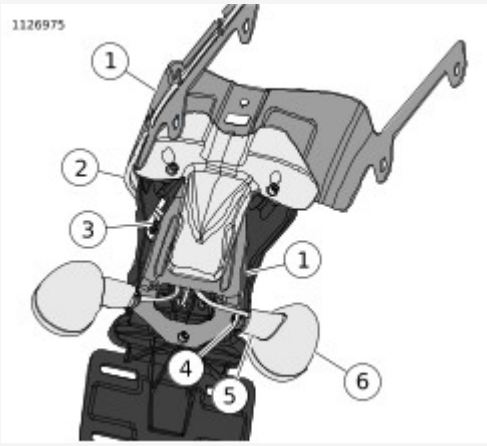

View interactive image

1	Support bracket assembly
2	Wire harness
3	License plate holder
4	Screw and washer
5	Signal mounting support
6	Turn signal housing

Figure 2. Center Mount Turn Signal

Install

1. See **Figure 2**. Assemble left or right turn signal.
   a. Assemble signal mounting support (5) and turn signal housing (6).
   b. Install washer and screw (4). Tighten.
   Torque: 20–24 N·m (15–18 ft-lbs) *Rear Turn Signal, Center Mount, Screw*
2. Route wire harness (2) through license plate holder (3) and support bracket assembly (1).
3. Assemble and install rear fender. See **Chassis → REAR FENDER**.
4. See **Figure 1**. Connect pins to 4-pin connector (1 or 2). See electrical diagnostic manual.
5. Connect connectors (1-3).

1. **All but FXDRS:** Install rear fender, if removed. See **Chassis → REAR FENDER**.
2. **All but FXDRS:** Install seat. See **Chassis → SEAT**.
3. **FXDRS:** Install rear lighting bracket. See **Chassis → REAR LIGHTING BRACKET**.
4. Install main fuse. See **Electrical → POWER DISCONNECT**.

Bulb Replacement

- **LED Tombstone:** LED bulb is not replaceable. Replace housing.
- **LED License plate mount:** LED bulb is not replaceable. Replace housing.
- **LED Center mount with lighting:** LED bulb is not replaceable. Replace housing.
- **FXDRS:** See Bulb Replacement, LED Rear Lighting Bracket in **Electrical → REAR TURN SIGNAL LAMPS**.

Standard

1. See **Figure 1**. Remove bulb.
   a. Remove screws (1).
   b. Remove lens (2).
   c. Remove connector (4).
   d. Remove bulb (3).
2. Install bulb.
   a. Install bulb (3).
   b. Install connector (4).
   c. Install lens (2).
   d. Install screws (1). Tighten.
   Torque: 2.3–2.7 N·m (20–24 **in-lbs**) *Tail Lamp Lens Screw*

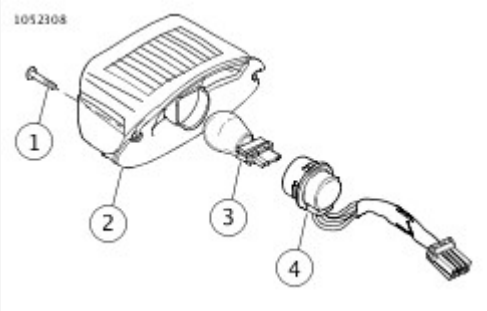

View interactive image

1	Screw (2)
2	Lens
3	Bulb
4	Connector

Figure 1. Standard Tail Lamp

1. Remove main fuse. See **Electrical → POWER DISCONNECT**.
2. Remove seat. See **Chassis → SEAT**.
3. **FXFB** Remove rear license plate bracket assembly. See **Chassis → REAR LICENSE PLATE BRACKET**.

See **Electrical → REAR TURN SIGNAL LAMPS**.

Remove

1. See Figure 1. Remove narrow screws (1).
2. Remove lens (2).
3. Disconnect connector from circuit board.
4. Remove wide screw (3).
5. Remove base assembly (4).
6. Disconnect connector (5).

Install

1. See Figure 1. Connect connector (5).
2. Install base assembly (4).
3. Install wide screw (3). Tighten.
   Torque: 4.5–5.4 N·m (40–48 **in-lbs**) *Tail Lamp, Standard, Base Screw*
4. Connect connector to circuit board.
5. Install lens (2).
6. Install narrow screws (1). Tighten.
   Torque: 2.3–2.7 N·m (20–24 **in-lbs**) *Tail Lamp, Standard, Lens Screw*

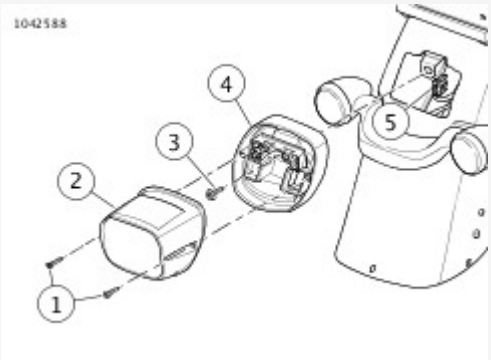

View interactive image

1	Narrow screw (2)
2	Lens
3	Screw, wide
4	Base Assembly
5	Connector

Figure 1. Standard Tail Lamp

Base Replacement

1. See Figure 2. Remove screws and lens (1).
2. Disconnect 4-pin multilock connector (3).
3. See Figure 3. Disconnect two 2-pin connectors (2).
4. See Figure 5. Disconnect 6-pin connector (4).
5. See Figure 4. Remove screw, pin housing (1) and circuit board (2).
6. Remove base from fender.
7. Install **new** base to rear fender.
8. Install circuit board/pin housing to base with screw, nut and washer. Tighten.
   Torque: 4.5–5.4 N·m (40–48 **in-lbs**) *Tail lamp, circuit board screw*
9. See Figure 5. Install connectors to circuit board.
10. Install lens to base with screws. Tighten.
    Torque: 2.3–2.7 N·m (20–24 **in-lbs**) *Tail lamp lens screw*

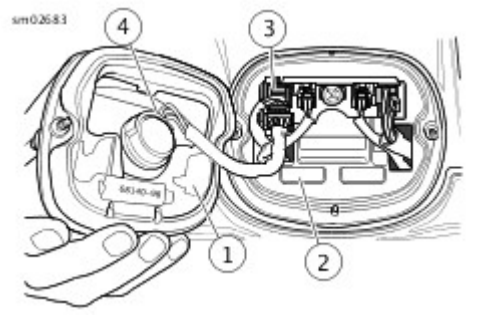

View interactive image

1	Lens
2	Base
3	4-Pin multilock connector
4	Bulb assembly

Figure 2. Standard Tail Lamp

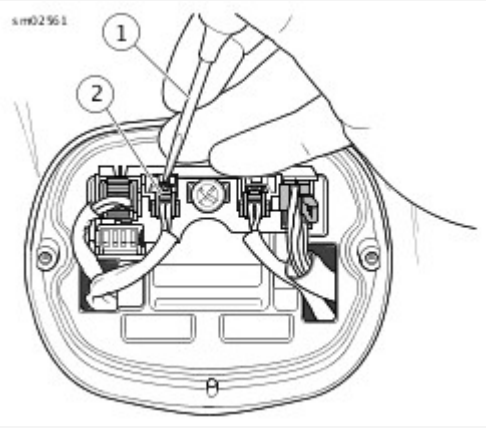

View interactive image

1	Terminal pick
2	2-pin connector

Figure 3. Removing 2-Pin Connectors

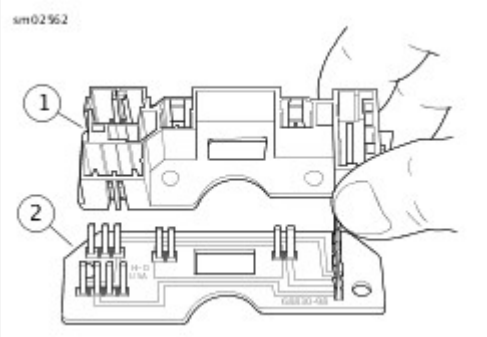

View interactive image

1	Pin housing
2	Circuit board

Figure 4. Pin Housing and Circuit Board

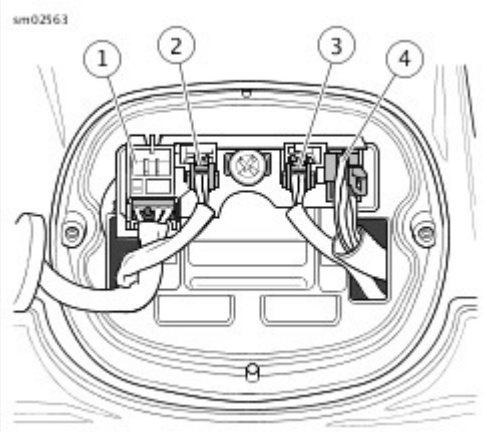

View interactive image

1	Tail lamp
2	Left turn signal
3	Right turn signal
4	Power in

Figure 5. Wire Location at Connectors

Remove

1. See **Figure 1**. Remove screws (3).
2. Disconnect connector (4).
3. Remove lens (1).
4. Remove gasket (2).

Install

1. See **Figure 1**. Install gasket (2).
2. Install lens (1).
3. Connect connector (4).
4. Install screws (3). Tighten.
   Torque: 11–14 N·m (8–10 ft-lbs) *Tail Lamp, Tombstone, Screw*

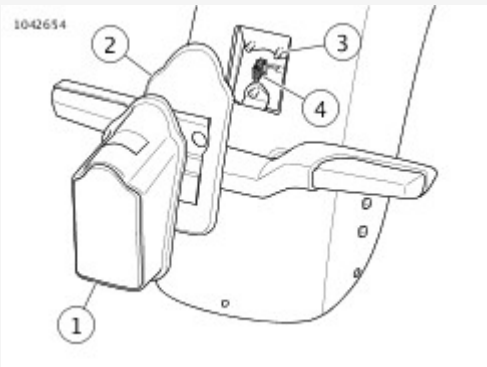

View interactive image

1	Lens
2	Gasket
3	Screw (3)
4	Connector

Figure 1. Tombstone Tail Lamp

Remove

1. See Figure 1. Disconnect license plate connector (1).
2. Disconnect pins from connector (1). See electrical diagnostic manual.
3. See Figure 2. Discard cable straps (1).
4. Remove screws (2).
5. Remove license plate holder (3).
6. Remove wire bundle (4) from frame.
7. See Figure 3. Remove screws (1) and washers (2).
8. Remove tail lamp (3).

Install

1. See Figure 3. Install tail lamp (3).
2. Install screws (1) and washers (2). Tighten.
   Torque: 1.1–2.3 N·m (10–20 **in-lbs**) *License plate, tail lamp, screw*
3. See Figure 2. Route wire bundle (4) through frame.
4. Install license plate holder (3).
5. Install screws (2). Tighten.
   Torque: 6.8–9 N·m (60–80 **in-lbs**) *License plate holder, screw*
6. Route harness and install **new** cable straps (1).
7. Connect pins to connector (1). See electrical diagnostic manual.
8. See Figure 1. Connect license plate connector (1).

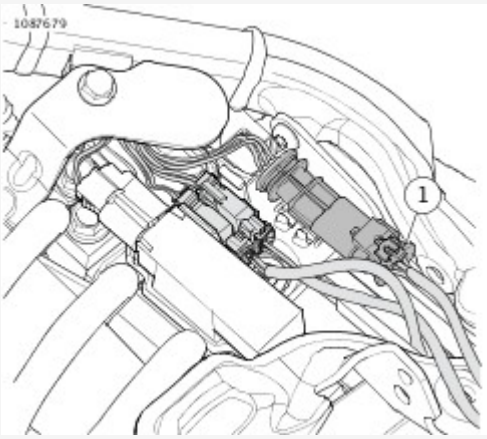

View interactive image

1	License plate light connector

Figure 1. License Plate Light Connector

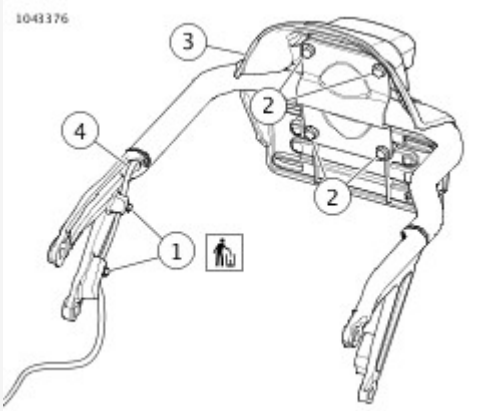

View interactive image

1	Cable strap (2)
2	Screw (4)
3	License plate holder
4	Wire bundle

Figure 2. License Plate Holder

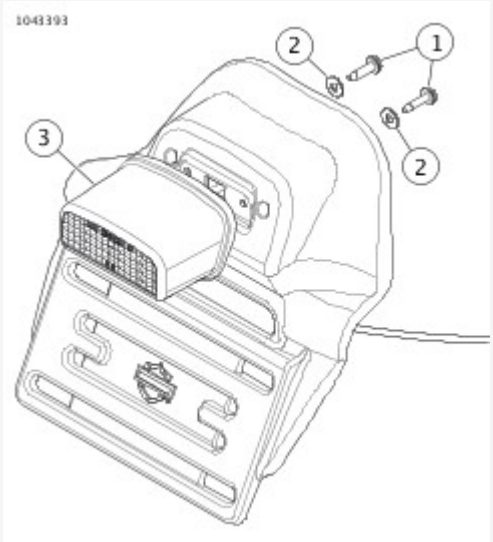

View interactive image

1	Screw (2)
2	Washer (2)
3	Tail lamp

Figure 3. Tail Lamp (Typical)

Remove

1. See Figure 1. Disconnect connector (3).
2. Disconnect pins from connector (3). See electrical diagnostic manual.
3. Remove and disassemble rear fender. See Chassis → REAR FENDER.
4. See Figure 2. Remove harness (2) from support bracket assembly (1).
5. See Figure 3. Remove screws (1) and washers (2).
6. Remove tail lamp (3).

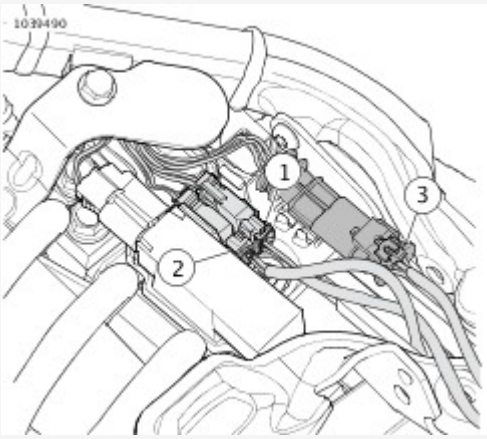

View interactive image

1	Right lamp connector
2	Left lamp connector
3	License plate light connector

Figure 1. Turn Signal Lamp Connectors

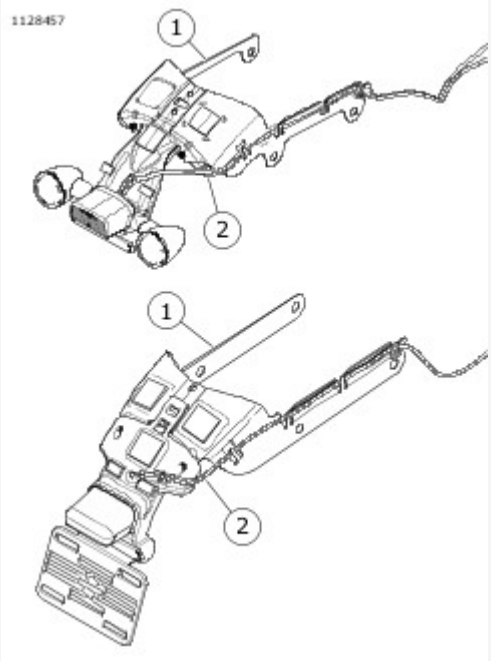

View interactive image

1	Support bracket assembly
2	Harness

Figure 2. Inner Fender Support Bracket

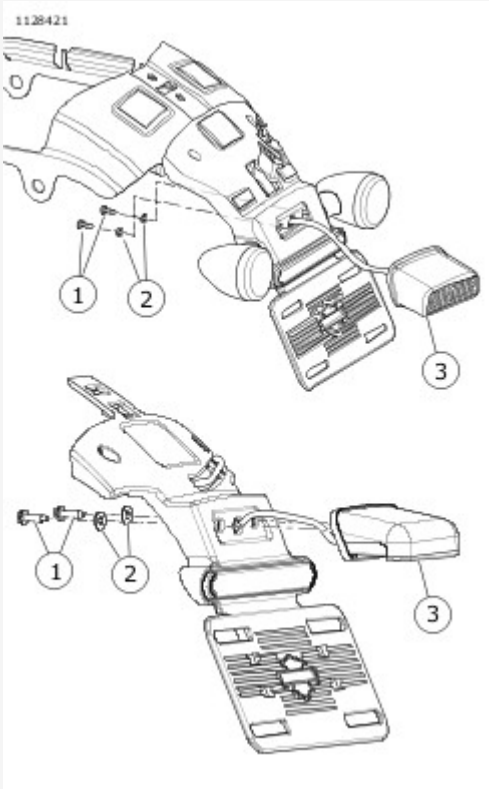

View interactive image

1	Screw (2)
2	Washer (2)
3	Tail lamp

Figure 3. LED Center Mount

Install

1. See **Figure 3**. Install tail lamp (3).
2. Install screws (1) and washers (2). Tighten.
   Torque: 1.1–2.25 N·m (10–20 **in-lbs**) *License plate, center mount, tail lamp screw*
3. See **Figure 2**. Route harness (2) through support bracket assembly (1).
4. Assemble and install rear fender. See **Chassis → REAR FENDER**.
5. See **Figure 3**. Connect pins to connector (3). See electrical diagnostic manual.
6. Connect connector (3).

1. **FXFB** Install rear license plate bracket assembly. See **Chassis → REAR LICENSE PLATE BRACKET**.
2. Install seat. See **Chassis → SEAT**.
3. Install main fuse. See **Electrical → POWER DISCONNECT**.

1. Remove main fuse. See **Electrical → POWER DISCONNECT**.

NOTICE

DOT 4 brake fluid will damage painted and body panel surfaces it comes in contact with. Always use caution and protect surfaces from spills whenever brake work is performed. Failure to comply can result in cosmetic damage. (00239c)

1. See **Electrical → REAR STOPLAMP SWITCH → Install → Rear Stop Lamp Switch**. Remove connectors (1).
2. Remove switch (2).

Consumables

Description	Part Number	Size
LOCTITE 565 THREAD SEALANT	99818-97	6 ml (¼ fl oz)

1. Apply LOCTITE® 565 to threads of switch.
   LOCTITE 565 THREAD SEALANT (99818-97)
2. See **Figure 1**. Install switch (2). Tighten.
   Torque: 16.3–20.3 N·m (12–15 ft-lbs) *Rear stoplamp switch*
3. Install connectors (1).

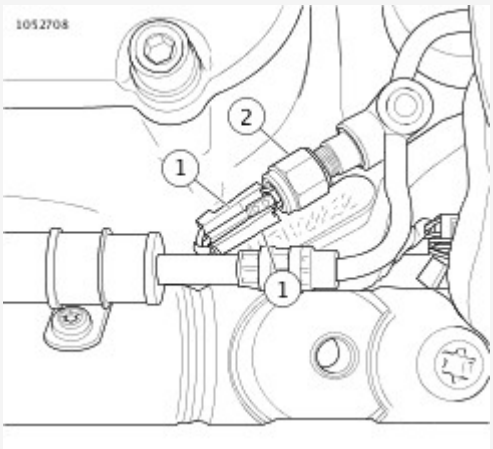

View interactive image

1	Connector (2)
2	Switch

Figure 1. Rear Stop Lamp Switch

1. Install main fuse. See **Electrical → POWER DISCONNECT**.

> **WARNING**
>
> After repairing the brake system, test brakes at low speed. If brakes are not operating properly, testing at high speeds can cause loss of control, which could result in death or serious injury. (00289a)

2. Bleed brake system. See **Chassis → BLEED BRAKES**.

Bulb Replacement

- **Standard Tail Lamp:** Replace tail lamp bulb. See Electrical → TAIL LAMP.
- **LED Tombstone:** LED bulb is not replaceable. Replace housing. See Electrical → TAIL LAMP.
- **LED License Plate Mount:** LED bulb is not replaceable. Replace housing. See Electrical → TAIL LAMP.
- **LED Center Mount:** LED bulb is not replaceable. Replace housing. See Electrical → TAIL LAMP.
- **LED Rear Lighting Assembly:** Replace rear tail lamp bulb. See Bulb Replacement, Rear Lighting Assembly in Electrical → REAR TURN SIGNAL LAMPS.

Incandescent Bulb Center Mount:

Remove

1. See Figure 1. Remove screws (1) and washers (2).
2. Rotate lamp housing (3) to face upward.
3. See Figure 2. Insert the tip of a small flat bladed screwdriver (3) into each slot (2). Gently disengage housing from cover.
4. See Figure 3. Gently pull bulb (2) straight out of socket.

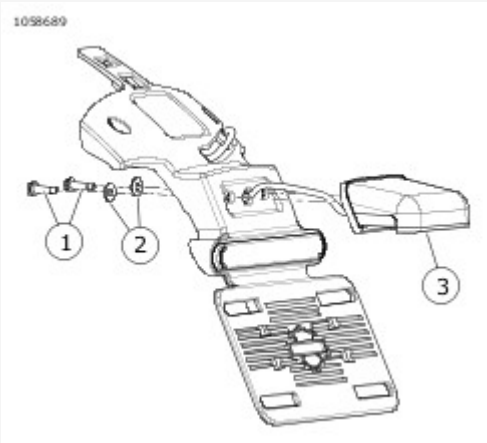

View interactive image

1	Screw (2)
2	Washer (2)
3	Lamp housing

Figure 1. Center Mount Lamp Housing (Typical)

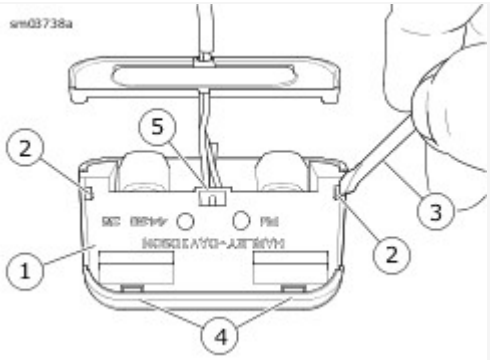

View interactive image

1	Lamp housing
2	Slot (2)
3	Screwdriver
4	Tab (2)
5	Feed slots for harness wires

Figure 2. Removing License Plate Lamp Housing Cover

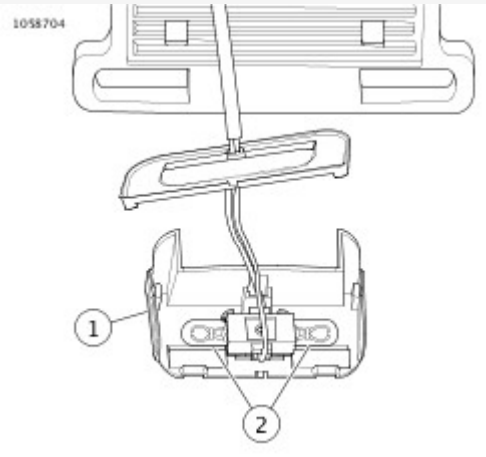

View interactive image

1	Lamp housing
2	Bulb (2)

Figure 3. Center Mount Bulb Replacement

Install

1. See **Figure 3**. Push **new** light bulb (2) into socket.
2. See **Figure 2**. Install lamp housing to cover.

3. Position lamp housing (3).
4. See **Figure 1**. Install screws (1) and washers (2). Tighten.
   Torque: 1.1–2.25 N·m (10–20 **in-lbs**) *License plate, center mount, lamp housing screw*

1. Remove main fuse. See **Electrical → POWER DISCONNECT**.
2. Remove seat. See **Chassis → SEAT**.

Remove

1. See Figure 1. Disconnect connector (3).
2. Disconnect pins from 3-pin connector (3). See electrical diagnostic manual.
3. Remove rear fender. See Chassis → REAR FENDER.
4. See Figure 2. Remove harness (2) from inner fender support assembly (1).
5. See Figure 3. Remove screws (1) and washers (2).
6. Remove lamp housing (3).

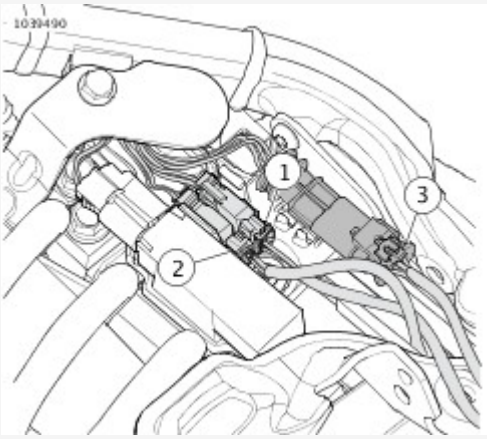

View interactive image

1	Right lamp connector
2	Left lamp connector
3	License plate light connector

Figure 1. Turn Signal Lamp Connectors

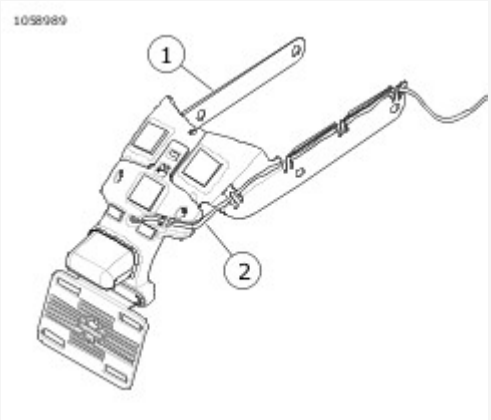

View interactive image

1	Inner fender support assembly
2	Harness

Figure 2. Inner Fender Support Assembly (Typical)

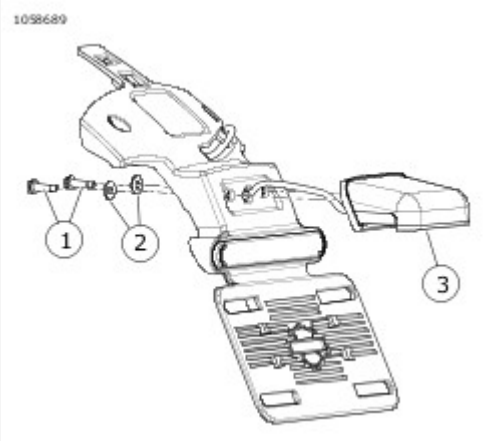

View interactive image

1	Screw (2)
2	Washer (2)
3	Lamp housing

Figure 3. Center Mount Lamp Housing (Typical)

Install

1. See **Figure 3**. Install lamp housing (3).
2. Install screws (1) and washers (2). Tighten.
   Torque: 1.1–2.25 N·m (10–20 **in-lbs**) *License plate, center mount, lamp housing screw*
3. See **Figure 2**. Route harness (2) through inner fender support assembly (1).
4. Install rear fender. See **Chassis → REAR FENDER**.
5. See **Figure 1**. Connect pins to 3-pin connector (3). See electrical diagnostic manual.
6. Connect connector (3).

Remove

1. See Figure 1. Disconnect license plate connector (1).
2. Disconnect pins from connector (1). See electrical diagnostic manual.
3. See Figure 2. Discard cable straps (1).
4. Remove screws (2).
5. Remove license plate holder (3).
6. Remove wire bundle (4) from frame.
7. See Figure 3. Remove screws (1) and washers (2).
8. Remove LED housing (3).

Install

1. See Figure 3. Install LED housing (3).
2. Install screws (1) and washers (2). Tighten.
   Torque: 1.1–2.3 N·m (10–20 **in-lbs**) *License plate, LED housing, screw*
3. See Figure 2. Route wire bundle (4) through frame.
4. Install license plate holder (3).
5. Install screws (2). Tighten.
   Torque: 9.5–15 N·m (84–133 **in-lbs**) *License plate holder, screw*
6. Route harness and install **new** cable straps (1).
7. Connect pins to connector (1). See electrical diagnostic manual.
8. See Figure 1. Connect license plate connector (1).

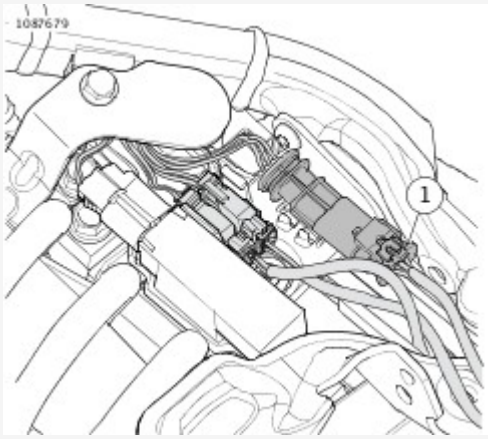

View interactive image

1	License plate light connector

Figure 1. License Plate Light Connector

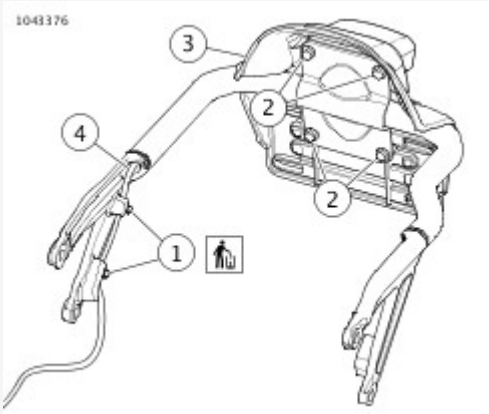

View interactive image

1	Cable strap (2)
2	Screw (4)
3	License plate holder
4	Wire bundle

Figure 2. License Plate Holder

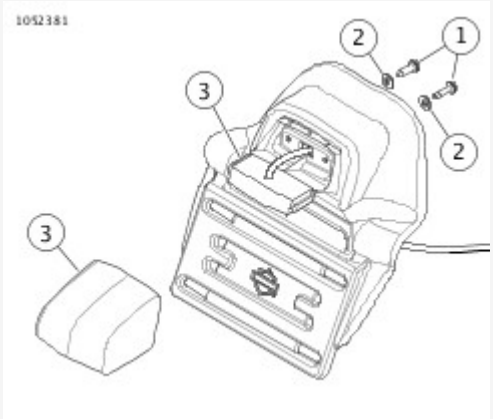

View interactive image

1	Screw (2)
2	Washer (2)
3	LED Housing

Figure 3. License Plate Mount LED Housing

Remove

1. See Figure 1. Disconnect connectors.
   a. **License Plate:** Disconnect connector (2).
   b. **Left Signal:** Disconnect connectors (1).
2. See Figure 2. Remove left fender support.
   a. Remove screws (2).
   b. Remove screws (4) and washers (3).
   c. Remove fender support (1).
3. See Figure 3. Remove harness.
   a. Discard wire retention pads (1).
   b. Remove harness (2).
4. See Figure 1. Disconnect pins from connector (2). See electrical diagnostic manual.
5. See Figure 4. Disassemble turn signal.
   a. Remove screw (1) and washer (2).
   b. Disassemble license plate mounting support and turn signal.
   c. Remove screws (4) and cover (5).
   d. Remove lamp (3) with harness.

Install

1. See Figure 4. Assemble turn signal.
   a. Install lamp (3).
   b. Install cover (5) and screws (4). Tighten.
      Torque: 0.9–1.8 N·m (8–16 **in-lbs**) *License Plate Lamp Cover, Screw*
   c. Route harness, assemble license plate mounting support and turn signal. See Electrical → REAR TURN SIGNAL LAMPS.
   d. Install screw (1) and washer (2).
      Torque: 20–24 N·m (15–18 ft-lbs) *Rear Turn Signal, Fender Mount, Screw*
2. See Figure 1. Connect pins to connector (2). See electrical diagnostic manual.
3. See Figure 3. Install harness.
   a. Route harness (2) through fender support (4).
   b. Install **new** wire retention pads (1).
4. See Figure 2. Install fender support.
   a. Install fender support (1), washers (3) and screws (4). Tighten.
      Torque: 57–62.3 N·m (42–46 ft-lbs) *Fender Support, Screw*
   b. Install screws (2). Tighten.
      Torque: 28–37 N·m (21–27 ft-lbs) *Fender Support, Screw*
5. See Figure 1. Connect connectors.

a. **License Plate:** Disconnect connector (2).

b. **Left Signal:** Disconnect connectors (1).

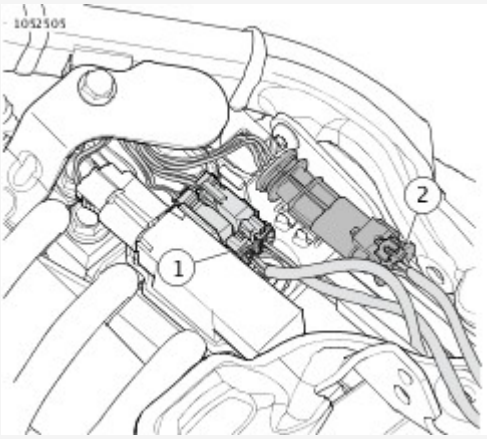

View interactive image

1	Left lamp connector
2	License plate light connector

Figure 1. License Plate Lamp Connector

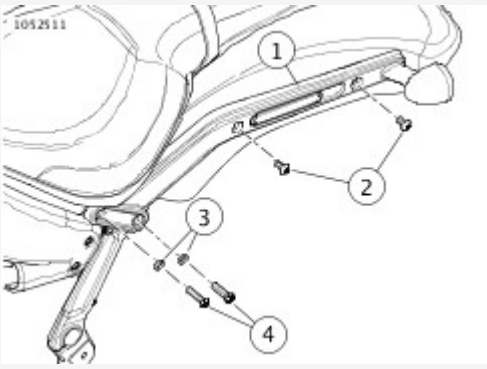

View interactive image

1	Fender support
2	Screw, long or short (2)
3	Washer (2)
4	Screw (2)

Figure 2. Right Fender Support

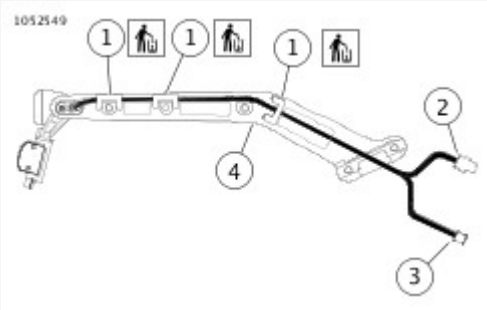

View interactive image

1	Wire retention pads (3)
2	Harness, license plate
3	Harness, left signal
4	Fender support

Figure 3. Left Fender Support

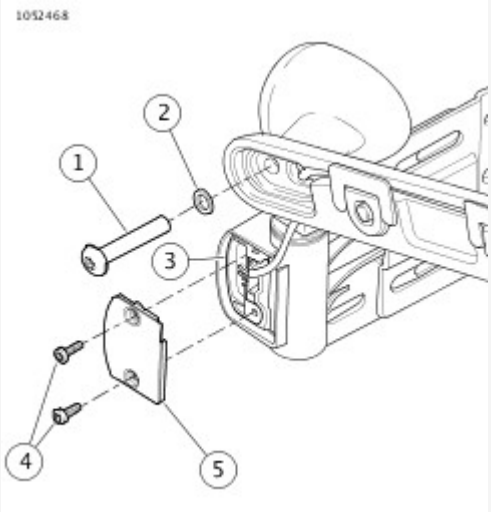

View interactive image

1	Screw
2	Washer
3	License plate lamp
4	Screw (2)
5	Cover

Figure 4. Turn Signal Assembly

1. Install seat. See **Chassis → SEAT**.
2. Install main fuse. See **Electrical → POWER DISCONNECT**.

1. Remove left side cover. See **Chassis → LEFT SIDE COVER**.
2. Remove main fuse. See **Electrical → POWER DISCONNECT**.

1. See **Electrical → TERMINATING RESISTOR → Install → CAN Terminating Resistor**. Remove terminating resistor.

1. See **Figure 1**. Install terminating resistor.

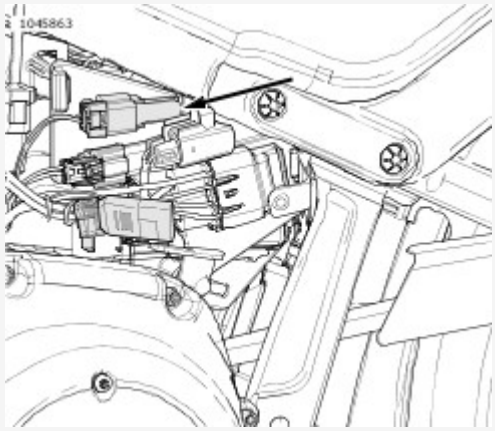

View interactive image

Figure 1. CAN Terminating Resistor

1. Install main fuse. See **Electrical → POWER DISCONNECT**.
2. Install left side cover. See **Chassis → LEFT SIDE COVER**.

Special Tools

Description	Part Number	Qty.
DIGITAL TECHNICIAN II	HD-48650	1

NOTE

Always calibrate replaced **ECM** (Electronic control module) with **DIGITAL TECHNICIAN II (Part Number:HD-48650)**.

1. Remove seat. See **Chassis → SEAT**.
2. Remove main fuse. See **Electrical → POWER DISCONNECT**.

1. Release and move sub caddy mounting bracket.
    a. See **Figure 1**. Remove screw (3).
    b. Disconnect front sub caddy lock (1).
    c. Disconnect rear sub caddy lock (2).
    d. Route sub caddy out-of-way.

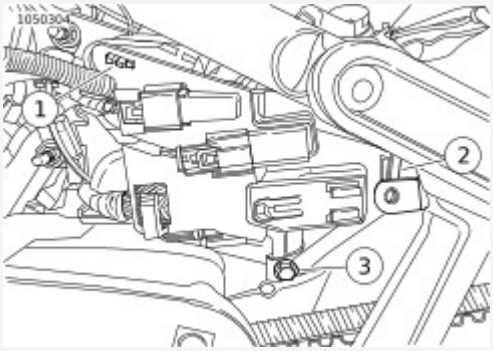

View interactive image

1	Front sub caddy lock
2	Rear sub caddy lock
3	Sub caddy screw

Figure 1. ECM Sub Caddy

2. Remove **ECM** (Electronic control module).
    a. See **Figure 2**. Slide **ECM** forward.
    b. Remove **ECM** from caddy.
    c. Disconnect **ECM** connectors.
    d. Remove **ECM**.

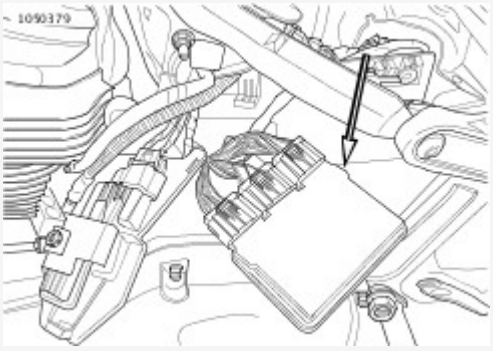

View interactive image

Figure 2. ECM Removed

1. Install **ECM** (Electronic control module).
   a. See **Electrical → ELECTRONIC CONTROL MODULE (ECM) → Remove → ECM Removed**. Connect **ECM** connectors. Verify locking tabs are in the lock position.
   b. Install **ECM** into caddy.
2. Install sub caddy mounting bracket.
   a. See **Electrical → ELECTRONIC CONTROL MODULE (ECM) → Remove → ECM Sub Caddy**. Route sub caddy into position.
   b. Push and lock into position the rear sub caddy lock (2).
   c. Push and lock into position the front sub caddy lock (1).
   d. Install screw (3). Tighten
      Torque: 4.1–6.8 N·m (36–60 **in-lbs**) *Sub caddy screw*

1. Install seat. See **Chassis → SEAT**.
2. Install main fuse. See **Electrical → POWER DISCONNECT**.

Special Tools

Description	Part Number	Qty.
DIGITAL TECHNICIAN II	HD-48650	1

NOTE

Always calibrate replaced **BCM** (Body control module) with **DIGITAL TECHNICIAN II (Part Number:HD-48650)**.

1. Remove seat. See **Chassis → SEAT**.
2. Disconnect negative battery cable. See **Electrical → POWER DISCONNECT**.
3. Remove battery tray. See **Electrical → BATTERY TRAY**.

1. Remove **BCM** (Body control module).
   a. See **Figure 1**. Disconnect **BCM** [242] (1).
   b. See **Figure 2**. Move **BCM** out of caddy.

NOTE
If rotating the **BCM** to access components behind **BCM**, do not disconnect **BCM** battery power or remove **BCM**.

   c. Disconnect **BCM** battery power [259] (1).
   d. Remove **BCM** (2).

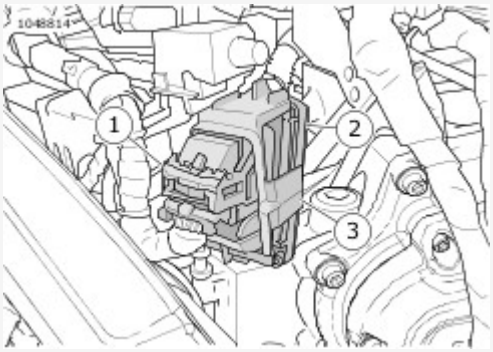

View interactive image

1	BCM [242]
2	BCM
3	Caddy

Figure 1. BCM [242]

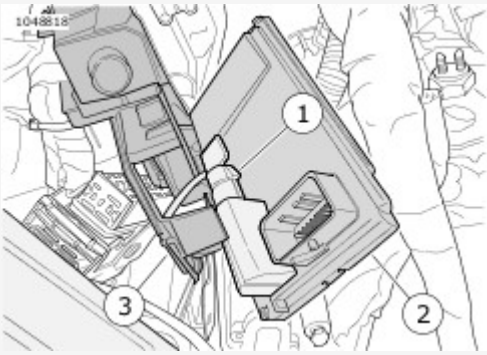

View interactive image

1	BCM battery power [259]
2	BCM

3	Caddy

Figure 2. BCM [259]

1.

NOTE

When installing battery power connector verify seal does not roll.

Install **BCM** (Body control module).

a. See **Electrical → BODY CONTROL MODULE (BCM) → Remove → BCM [259]**. Connect **BCM** battery power [259] (1).

b. See **Electrical → BODY CONTROL MODULE (BCM) → Remove → BCM [242]**. Install **BCM** (2) into caddy (3).

c. Connect **BCM** [242] (1).

1. Install battery tray. See **Electrical → BATTERY TRAY**.
2. Connect negative battery cable. See **Electrical → POWER DISCONNECT**.
3. Install seat. See **Chassis → SEAT**.

Activation consists of assigning two fobs to the system and entering an initial PIN.

NOTE

If the fob is lost or inoperable, the PIN allows the owner to disarm the system. See **Electrical → PERSONAL IDENTIFICATION NUMBER (PIN)**.

1. Configure the security system by assigning both fobs to the vehicle.
2. Configure the security system by entering a PIN picked by the owner.

Record the PIN in the owner's manual. Instruct the customer to carry a copy (use the wallet card found in the owner's manual). See **Electrical → PERSONAL IDENTIFICATION NUMBER (PIN)**.

Once the system has been activated, it "arms" within 5 seconds of switching the IGN switch to OFF and no motorcycle motion.

Special Tools

Description	Part Number	Qty.
DIGITAL TECHNICIAN II	HD-48650	1

Use **DIGITAL TECHNICIAN II (Part Number:HD-48650)** to assign both fobs to the vehicle.

NOTE

- Choose the correct fob type. Choosing incorrectly at the beginning of the process will result in a failure to assign the fob. This can be mistakenly diagnosed as a bad fob or SCM.
- When assigning a fob, keep the fob within 1 m (3 ft) of the vehicle seat.

See **Figure 1**. Follow the menu prompts to scan the fob serial number with the bar code reader. Alternatively, enter the number using the keyboard. Use **DIGITAL TECHNICIAN II (Part Number:HD-48650)** to assign fob and enter initial PIN.

NOTE

Each fob has a unique serial number. Attach fob label to a blank NOTES page in the owner's manual for reference.

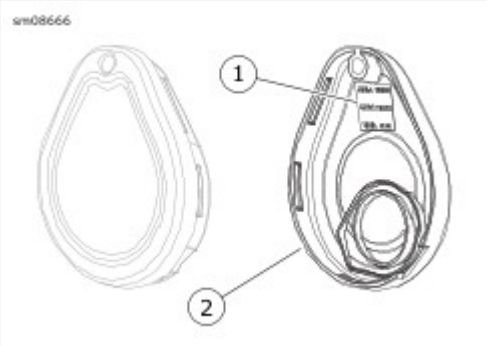

View interactive image

1	Fob serial number
2	Fob cover

Figure 1. Fob Serial Number

The PIN consists of five digits. Each digit can be any number from 1 through 9. There can be no zeros (0) in the PIN. Use the PIN to disarm the security system in case the fob becomes unavailable.

The rider can change the PIN at any time. Refer to Table 1.

Modifying an Existing PIN

If a PIN was previously entered, the odometer will display the equivalent digit. Each additional press of the left turn switch will increment the digit.

Examples:

- To advance from 5 to 6, press and release the left turn switch 1 time.
- To advance from 8 to 2, press and release the left turn switch 3 times (9-1-2).

Table 1. Changing the PIN

STEP NO.	ACTION	WAIT FOR CONFIRMATION	NOTES
1	Select a 5-digit (1 thru 9) PIN and record on the wallet card from owner's manual.		
2	With an assigned fob present, turn the engine stop switch to **OFF**.		
3	Turn the OFF/RUN switch to **RUN**.		
4	Cycle the OFF/RUN switch twice: **RUN - OFF - RUN - OFF - RUN**.		
5	Press **left** turn signal switch **two times**.	ENTER PIN will scroll through the odometer window.	
6	Press **right** turn signal switch **one time** and release.	Turn signals will flash three times. Current PIN will appear in odometer. The first digit will be flashing.	
7	Enter first digit of new PIN by pressing and releasing the **left** turn signal switch until the selected digit appears.		
8	Press **right** turn signal switch **one time** and release.	The new digit will replace the current in odometer window.	
9	Enter second digit of selected PIN by pressing and releasing the **left** turn signal switch until the selected digit is present.		
10	Press **right** turn signal switch **one time** and release.	The new digit will replace the current in odometer window.	
11	Enter third digit of the selected PIN by pressing and releasing the **left** turn signal switch until the selected digit is present.		
12	Press **right** turn switch **one time** and release.	The new digit will replace the current in odometer window.	
13	Enter fourth digit of new PIN by pressing and releasing the **left** turn signal switch until the		

	selected digit is present.		
14	Press **right** turn switch **one time** and release.	The new digit will replace the current in odometer window.	
15	Enter fifth digit of the new PIN by pressing and releasing the **left** turn signal switch until the selected digit is present.		
16	Press **right** turn switch **one time** and release.	The new digit will replace the current in odometer window.	
17	Turn the engine stop switch **OFF**, then turn the ignition switch to **OFF**.		Pushing the engine stop switch to **OFF** stores the new PIN in the module.

Special Tools

Description	Part Number	Qty.
DIGITAL TECHNICIAN II	HD-48650	1

With a fob present, the security system can be configured for service by disabling the security system with **DIGITAL TECHNICIAN II (Part Number:HD-48650)**.

Once disabled, the vehicle can be operated without an assigned fob present. To maintain the service mode, the assigned fobs must be kept out of range. If the fob appears in range, the service mode is cancelled.

It is possible to arm the security system without enabling the motion detector for one ignition cycle. The motorcycle can be moved in an armed state. The motorcycle cannot be turned on or started while in transport mode until the fob is present.

To Enter Transport Mode

1. With security fob present, set the OFF/RUN switch to RUN.
2. Set the OFF/RUN switch to OFF.
3. Simultaneously press both the left and the right turn signal switches within five seconds of turning the OFF/RUN switch to OFF.
4. Following a single flash, the turn signals flash three times to indicate that the system is armed in transport mode.

To Exit Transport Mode

With the fob present, set the OFF/RUN switch to RUN to disarm the system and exit transport mode.

Battery Replacement Schedule

Replace the fob battery every year.

Battery Replacement

1. Open the fob case.
    a. See Figure 1. Place a thin blade in the thumbnail slot (1).
    b. Twist the blade to separate cases.

NOTE

Use a CR2032 or equivalent battery.

2. Install a new battery with the positive side up.
    a. Push the latch (3) away from the battery.
    b. Lift the battery from the side opposite the latch.
    c. Verify that the metal tabs will firmly contact battery. Bend up slightly if necessary.
    d. Install the battery against the latch with the positive side up. Drop into place.
3. Close the case.
    a. Align case halves.
    b. Snap case halves together.

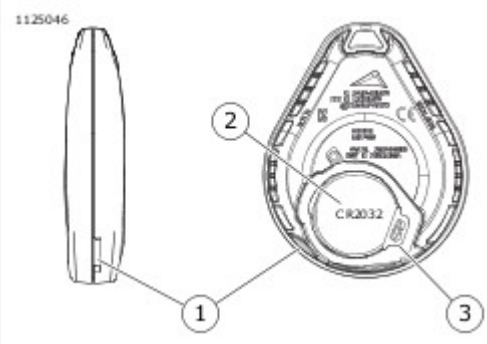

View interactive image

1	Thumbnail slot
2	Battery (CR2032)
3	Latch

Figure 1. Replace Fob Battery

Battery Replacement Schedule

The siren internal 9 V battery is rechargeable and does not require regular replacement. Battery life under normal conditions is approximately 3-6 years.

NOTE

If the motorcycle battery is less than 12.5 V, the internal siren battery may not charge.

Battery Replacement

1. Disarm system. Remove siren.
2. See Figure 1. With a small screwdriver, push the catches (1) in through the two slots (2) in the end of the siren. Release the battery cover (3).

NOTE

- For protection against corrosion, battery terminals and battery clip are covered with a special grease. Do not wipe away this substance. Apply all available existing grease to terminals on **new** battery.
- Use only a 9 V nickel metal hydride battery in the siren.

3. Replace 9 volt battery (4) by removing old battery from polarized battery clip.
4. Recharge and install or install a **new** 9 volt nickel metal hydride battery.
5. Install cover (3).
   a. Carefully replace the rubber seal (5) on the cover.
   b. Align battery cover with case placing round corners on cover away from connector [142A] (6).
   c. Snap cover into place.
6. Install siren and check operation. Two chirps after an arming command indicate a working siren.

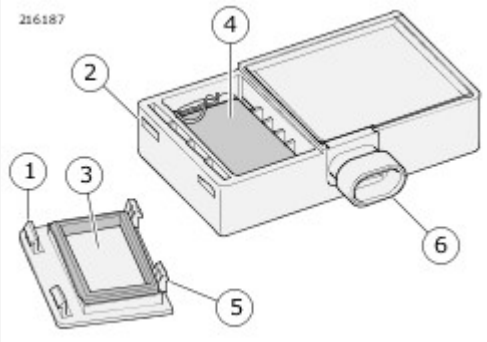

View interactive image

1	Catch (2)
2	Slot (2)
3	Cover
4	9V battery
5	Rubber seal

6	Connector [142A]

Figure 1. Battery Compartment

1. Remove right side cover. See **Chassis → RIGHT SIDE COVER**.
2. Disconnect negative battery cable. See **Electrical → POWER DISCONNECT**.
3. Remove battery. See **Maintenance → INSPECT BATTERY**.
4. Remove battery tray. See **Electrical → BATTERY TRAY**.
5. Rotate **BCM** (Body control module) out-of-way. See **Electrical → BODY CONTROL MODULE (BCM)**.

1. See **Electrical → SECURITY SIREN → Install → Security Siren and BCM Caddy: (Removed for clarity)**. Remove security siren (3).
2. Disconnect connector (4).

1. **First-time security siren is being installed:** Disconnect security siren connector (5) from back side of **BCM** (Body control module) caddy (2).
2. See **Figure 1**. Connect connector (4).
3. Install security siren into front side of **BCM** caddy (7).
   a. Verify that sounder disc (1) is facing to the rear of the vehicle.
   b. Place security siren into **BCM** caddy and press into place locking retainer tabs (6).

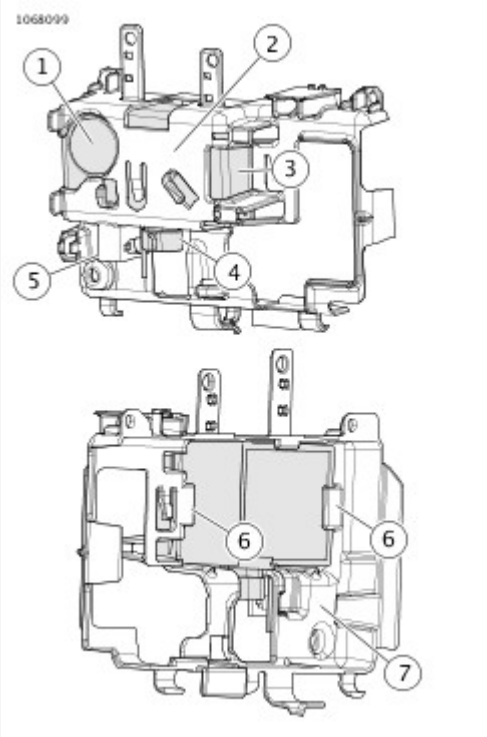

View interactive image

1	Sounder disc
2	Back side, **BCM** caddy
3	Security siren
4	Siren connector
5	Siren connector storage port
6	Retainer tab
7	Front side, **BCM** caddy

Figure 1. Security Siren and BCM Caddy: (Removed for clarity)

1. Install **BCM** (Body control module). See **Electrical → BODY CONTROL MODULE (BCM)**.
2. Install battery tray. See **Electrical → BATTERY TRAY**.
3. Install battery. See **Maintenance → INSPECT BATTERY**.
4. Connect negative battery cable. See **Electrical → POWER DISCONNECT**.
5. Install right side cover. See **Chassis → RIGHT SIDE COVER**.

1. Remove main fuse. See **Electrical → POWER DISCONNECT**.
2. Remove seat. See **Chassis → SEAT**.

1. See **Electrical → SECURITY SYSTEM ANTENNA → Install → Security Antenna**. Remove antenna (1).
   a. Remove antenna from caddy.
   b. Disconnect connector (2).
   c. Remove antenna.

1. See **Figure 1**. Install antenna (1).
   a. Connect connector (2).
   b. Connect antenna to caddy.

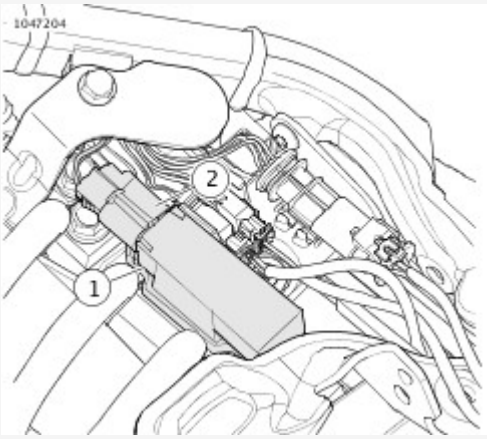

View interactive image

1	Antenna
2	Connector

Figure 1. Security Antenna

1. Install seat. See **Chassis → SEAT**.
2. Install main fuse. See **Electrical → POWER DISCONNECT**.

1. Remove main fuse. See **Electrical → POWER DISCONNECT**.
2. Remove voltage regulator. See **Electrical → VOLTAGE REGULATOR**.

1. **Electrical → CRANKSHAFT POSITION SENSOR (CKP) → Install → Crankshaft Position (CKP) Sensor** Disconnect connector.
   a. Disconnect connector (1).
   b. Detach connector (1) from voltage regulator bracket.
2. Remove sensor.
   a. Remove screw (2).
   b. Remove sensor (3).
3. **Electrical → CRANKSHAFT POSITION SENSOR (CKP) → Install → CKP Sensor Assembly** Discard O-ring.

1. See **Figure 2**. Install **new** O-ring.
   a. Lubricate **new** O-ring with clean engine oil.
   b. Install **new** O-ring.
2. See **Figure 1**. Install sensor.
   a. Install sensor (3).
   b. Install screw (2). Tighten.
      Torque: 10.2–13.6 N·m (90–120 **in-lbs**) *Sensor, CKP, screw*
3. Connect connector.
   a. Attach connector (1) to voltage regulator bracket.
   b. Connect connector (1).

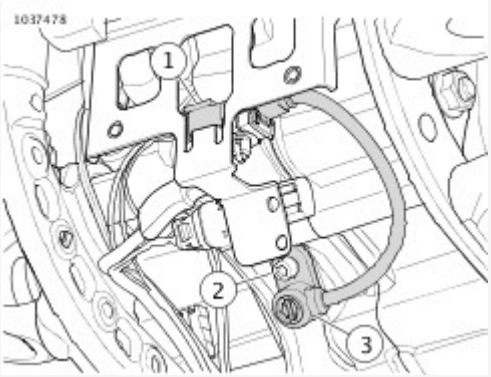

View interactive image

1	Connector
2	Screw
3	Sensor

Figure 1. Crankshaft Position (CKP) Sensor

View interactive image

Figure 2. CKP Sensor Assembly

1. Install voltage regulator. See **Electrical → VOLTAGE REGULATOR**.
2. Install main fuse. See **Electrical → POWER DISCONNECT**.

1. Purge fuel system. See **Fuel and Exhaust → PURGE FUEL LINE**.
2. Remove left side cover. See **Chassis → LEFT SIDE COVER**.
3. Remove main fuse. See **Electrical → POWER DISCONNECT**.
4. Remove seat. See **Chassis → SEAT**.
5. Remove fuel tank. See **Fuel and Exhaust → FUEL TANK**.
6. Remove air cleaner assembly. See **Fuel and Exhaust → AIR CLEANER BACKPLATE ASSEMBLY**.
7. Remove throttle body from induction module. See disassemble in **Fuel and Exhaust → INDUCTION MODULE**.

1. See **Figure 1**. Disconnect **ET** (Engine temperature) connector.
   See **Electrical → USB CADDY**.
2. Remove sensor (3) from rear cylinder head.

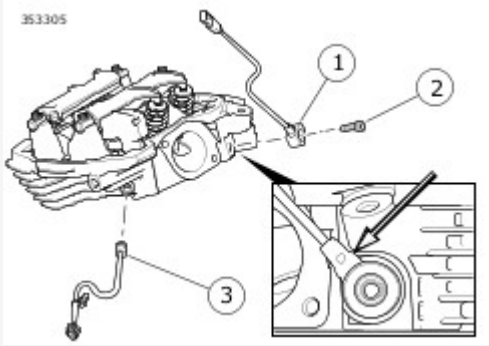

View interactive image

1	Knock sensor
2	Screw
3	**ET** sensor (rear head only)

Figure 1. Cylinder Head Sensors

1. Install **ET** (Engine temperature) sensor. Tighten.
   Torque: 14.9–21.2 N·m (11–16 ft-lbs) *ET sensor*
2. Connect **ET** connector. See **Electrical → USB CADDY**.

1. Install throttle body to induction module. See assemble in **Fuel and Exhaust → INDUCTION MODULE**.
2. Install air cleaner assembly. See **Fuel and Exhaust → AIR CLEANER BACKPLATE ASSEMBLY**.
3. Install fuel tank. See **Fuel and Exhaust → FUEL TANK**.
4. Install seat. See **Chassis → SEAT**.
5. Install main fuse. See **Electrical → POWER DISCONNECT**.
6. Install left side cover. See **Chassis → LEFT SIDE COVER**.

1. Purge fuel system. See **Fuel and Exhaust → PURGE FUEL LINE**.
2. Remove left side cover. See **Chassis → LEFT SIDE COVER**.
3. Remove main fuse. See **Electrical → POWER DISCONNECT**.
4. Remove seat. See **Chassis → SEAT**.
5. Remove fuel tank. See **Fuel and Exhaust → FUEL TANK**.

1. See **Electrical → KNOCK SENSOR (KS) → Install → Cylinder Head Sensors**. Remove screw (2).
2. Disconnect connector.
3. Remove sensor (1).

1. See **Figure 1**. Install sensor (1).
   a. Install sensor against head casting as shown.
   b. Install screw. Tighten.
      Torque: 17.6–23 N·m (13–17 ft-lbs) *Knock sensor screw*
2. Connect connector.

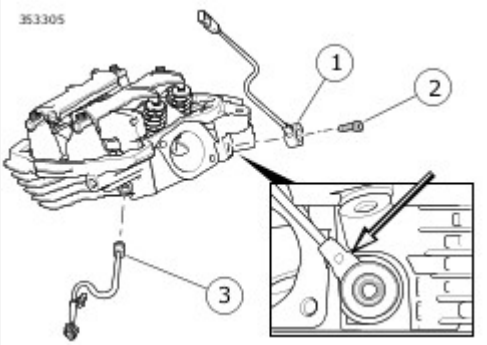

View interactive image

1	Knock sensor
2	Screw
3	ET (Engine temperature) sensor (rear head only)

Figure 1. Cylinder Head Sensors

1. Install fuel tank. See **Fuel and Exhaust → FUEL TANK**.
2. Install seat. See **Chassis → SEAT**.
3. Install main fuse. See **Electrical → POWER DISCONNECT**.
4. Install left side cover. See **Chassis → LEFT SIDE COVER**.

1. Purge fuel system. See **Fuel and Exhaust → PURGE FUEL LINE**.
2. Remove left side cover. See **Chassis → LEFT SIDE COVER**.
3. Remove main fuse. See **Electrical → POWER DISCONNECT**.
4. Remove seat. See **Chassis → SEAT**.
5. Remove fuel tank. See **Fuel and Exhaust → FUEL TANK**.
6. Front ACR: Remove oil lines. See **Engine → OIL COOLANT LINES**.

Special Tools

Description	Part Number	Qty.
ACR SOLENOID SOCKET	HD-48498-B-1	1

1. Disconnect **ACR** (Automatic compression release) connector.
2. See **Electrical → AUTOMATIC COMPRESSION RELEASE (ACR) → Install → ACR Solenoid Socket and ACR**. Remove **ACR**.

   Special Tool: **ACR SOLENOID SOCKET** (HD-48498-B-1)

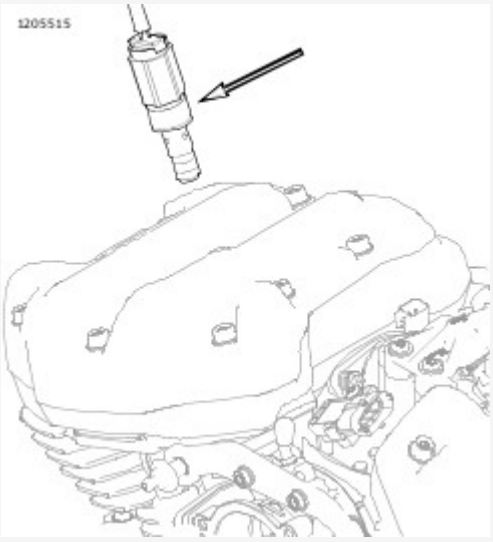

View interactive image

Figure 1. ACR and Cylinder Head

Special Tools

Description	Part Number	Qty.
ACR SOLENOID SOCKET	HD-48498-B-1	1

Consumables

Description	Part Number	Size
LOCTITE 246 HIGH TEMPERATURE MEDIUM STRENGTH BLUE THREADLOCKER	Loctite 246	10 ml

1. **NOTE**

   If installing **new** ACR (Automatic compression release), verify old copper seal washer does not remain in cylinder head.

   Verify copper seal washer is in place on ACR.
2. See Figure 1. Apply threadlocker.
   LOCTITE 246 HIGH TEMPERATURE MEDIUM STRENGTH BLUE THREADLOCKER (Loctite 246)
   a. Identify a location around the threads of the ACR approximately one-third distance from end.
   b. See Figure 2. Apply three equally spaced dots of threadlocker on threads.
3. Install by hand until finger-tight.
4. See Figure 3. Use socket to tighten.
   Torque: 23–26.4 N·m (17–19 ft-lbs) *ACR*

   Special Tool: ACR SOLENOID SOCKET (HD-48498-B-1)
5. Connect ACR connector.

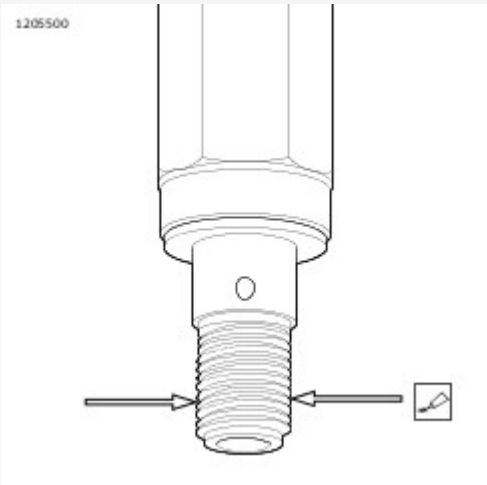

View interactive image

Figure 1. Bottom Third

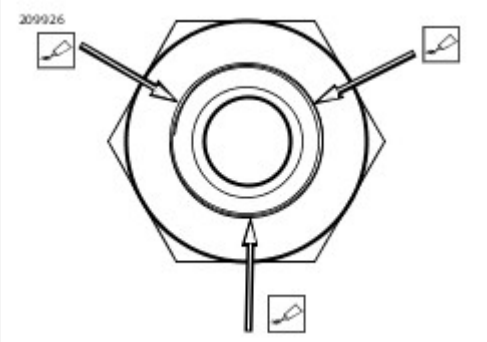

View interactive image

Figure 2. Three Dots of Threadlock

View interactive image

Figure 3. ACR Solenoid Socket and ACR

1. Front ACR: Install oil lines. See **Engine → OIL COOLANT LINES**.
2. Install fuel tank. See **Fuel and Exhaust → FUEL TANK**.
3. Install seat. See **Chassis → SEAT**.
4. Install main fuse. See **Electrical → POWER DISCONNECT**.
5. Install left side cover. See **Chassis → LEFT SIDE COVER**.

1. Remove left side cover. See **Chassis → LEFT SIDE COVER**.
2. Remove main fuse. See **Electrical → POWER DISCONNECT**.
3. Remove seat. See **Chassis → SEAT**.
4. Remove right side cover. See **Chassis → RIGHT SIDE COVER**.
5. Remove battery. See **Maintenance → INSPECT BATTERY**.

1. See **Electrical → VEHICLE SPEED SENSOR (VSS) → Install → Vehicle Speed Sensor**. Disconnect connector (1).
2. Remove VSS.
   a. Remove screw (2).
   b. Remove VSS (3).

1. See **Figure 1**. Install VSS.
   a. Install VSS (3).
   b. Install screw (2). Tighten.
      Torque: 11.3–13.6 N·m (100–120 **in-lbs**) *Sensor, vehicle speed, screw*
2. Connect connector (1).

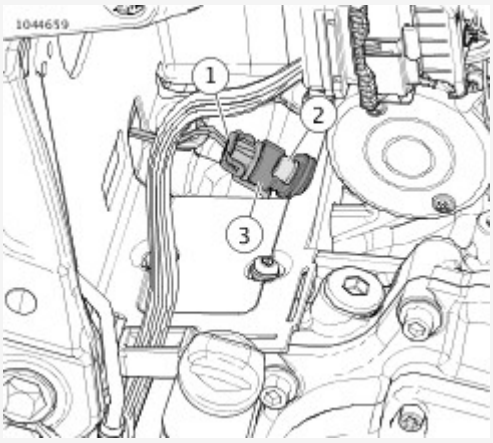

View interactive image

1	Connector
2	Screw
3	Sensor

Figure 1. Vehicle Speed Sensor

View interactive image

Figure 2. Vehicle Speed Sensor Assembly

1. Install battery. See **Maintenance → INSPECT BATTERY**.
2. Install right side cover. See **Chassis → RIGHT SIDE COVER**.
3. Install seat. See **Chassis → SEAT**.
4. Install main fuse. See **Electrical → POWER DISCONNECT**.
5. Install left side cover. See **Chassis → LEFT SIDE COVER**.

1. Remove left side cover. See **Chassis → LEFT SIDE COVER**.
2. Remove main fuse. See **Electrical → POWER DISCONNECT**.
3. Remove fuel tank. See **Fuel and Exhaust → FUEL TANK**.

1. Note location of cable straps and discard as needed.
2. See **Electrical → FRONT WHEEL SPEED SENSOR (WSS) → Install → Brake Line Clamps**. Remove brake line clamp screws.
3. See **Electrical → FRONT WHEEL SPEED SENSOR (WSS) → Install → Front Wheel Speed Sensor**. Detach WSS wire from clips (1).
4. Remove frame plug (2).
5. See **Electrical → FRONT WHEEL SPEED SENSOR (WSS) → Install → Front Wheel Speed Sensor Connector**. Disconnect connector (1).
6. Retract front axle until sensor is free. See **Chassis → FRONT WHEEL**.

1. Align sensor and insert front axle. See Chassis → FRONT WHEEL.
2. See Figure 3. Connect connector (1).
3. See Figure 2. Install frame plug (2).
4. Attach WSS wire to clips (1).
5. See Figure 1. Install brake line clamp screws.
6. Install **new** cable straps as needed.

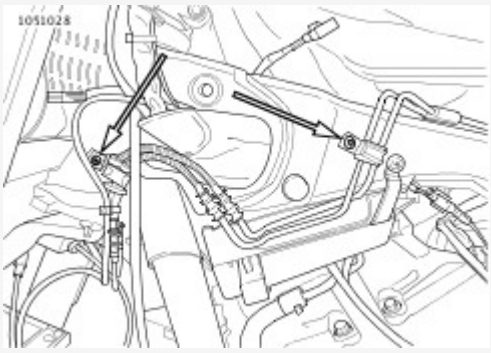

View interactive image

Figure 1. Brake Line Clamps

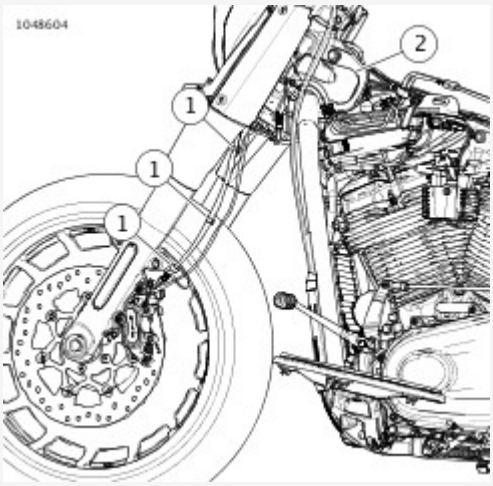

View interactive image

1	Clip (3)
2	Plug

Figure 2. Front Wheel Speed Sensor

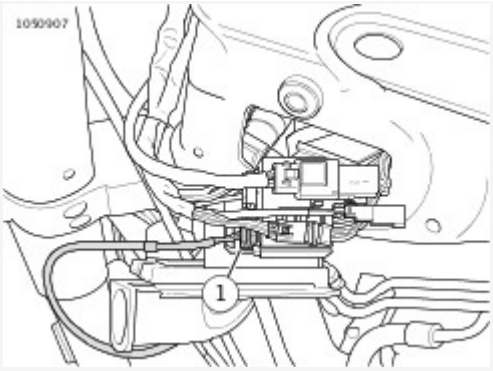

View interactive image

1	WSS Connector

Figure 3. Front Wheel Speed Sensor Connector

1. Install fuel tank. See **Fuel and Exhaust → FUEL TANK**.
2. Install main fuse. See **Electrical → POWER DISCONNECT**.
3. Install left side cover. See **Chassis → LEFT SIDE COVER**.

1. Remove left side cover. See **Chassis → LEFT SIDE COVER**.
2. Remove main fuse. See **Electrical → POWER DISCONNECT**.
3. Remove right side cover. See **Chassis → RIGHT SIDE COVER**.

Remove

1. Note location of cable straps. Remove as needed.
2. See **Figure 1**. Remove WSS wire from clips (1).
3. Remove clamp (2).
   a. Remove screw from clamp.
   b. Remove WSS wire from clamp.
4. Disconnect connector (3).
5. Retract rear axle until sensor is free. See **Chassis → REAR WHEEL**.

Install

1. Align sensor and rear axle. See **Chassis → REAR WHEEL**.
2. See **Figure 1**. Connect WSS sensor connector (3).
3. Install clamp (2).
   a. Install WSS sensor wire into clamp.
   b. Install screw. Tighten.
      Torque: 2.7–4.1 N·m (24–36 **in-lbs**) *Rear fork clamp screw (all but FXDRS)*
4. Attach WSS wire to clips (1).
5. Install cable straps as needed.

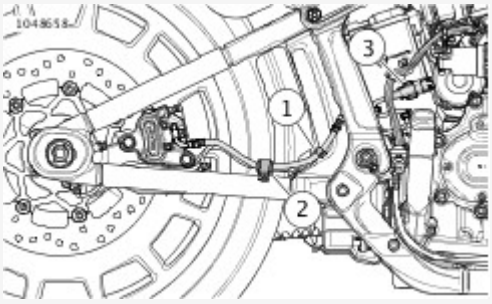

View interactive image

1	Clip
2	Clamp
3	Connector

Figure 1. Rear Wheel Speed Sensor

Remove

1. Raise rear wheel. See Maintenance → GENERAL → Secure the Motorcycle for Service.
2. Remove right side cover. See Chassis → RIGHT SIDE COVER.
3. See Figure 1. Remove closeout.
4. See Figure 2. Disconnect connector.
5. Detach wiring from retainers.
6. See Figure 3. Discard cable strap.
7. See Figure 4. Discard cable straps.
8. Retract rear axle until sensor is free. See Chassis → REAR WHEEL.
9. Remove WSS.

Install

1. Install WSS onto rear axle and align. See Chassis → REAR WHEEL.
2. See Figure 4. Route WSS wire through opening in rear fork.
3. See Figure 2. Connect WSS connector.
4. Route wiring through retainers.
5. See Figure 3. Install cable strap to rear fork. Secure WSS wires and harness.
6. See Figure 4. Install cable straps to rear fork. Secure WSS wires.
7. See Figure 1. Install closeout.

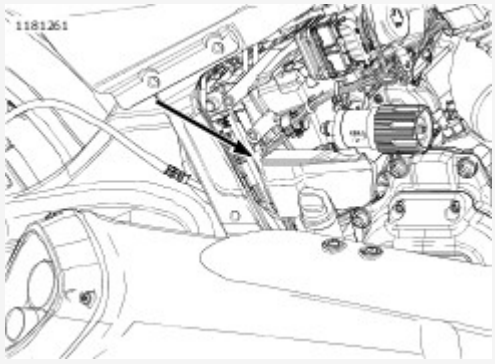

View interactive image

Figure 1. Closeout

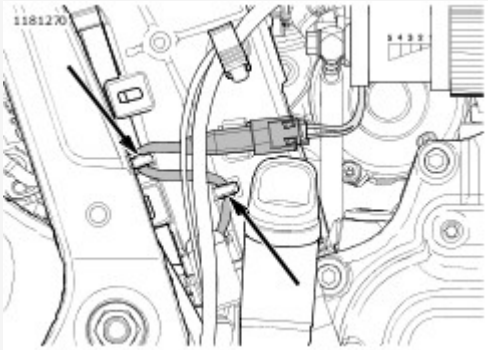

View interactive image

Figure 2. Rear WSS Wire Routing

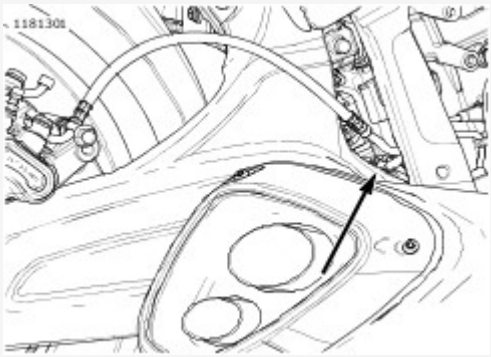

View interactive image

Figure 3. Front of Rear Fork

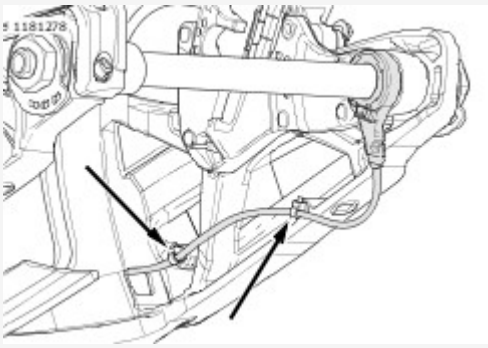

View interactive image

Figure 4. Rear Fork Routing

1. Install right side cover. See **Chassis → RIGHT SIDE COVER**.
2. Install main fuse. See **Electrical → POWER DISCONNECT**.
3. Install left side cover. See **Chassis → LEFT SIDE COVER**.

1. Remove main fuse. See **Electrical → POWER DISCONNECT**.
2. Remove jiffy stand. See **Chassis → JIFFY STAND**.

1. See **Electrical → JIFFY STAND SENSOR (JSS) → Install → Jiffy Stand (HDI)**. Disconnect connector (1).
2.

NOTE
Make note of cable routing and cable strap locations.

   Discard cable straps.
3. Remove screw (2).
4. Remove sensor (3).

1. See **Figure 1**. Install jiffy stand sensor (3).
2. Install screw (2). Tighten.
   Torque: 2.3–2.8 N·m (20–25 **in-lbs**) *JSS screw*
3. Connect connector (1).
4. Install **new** cable straps.

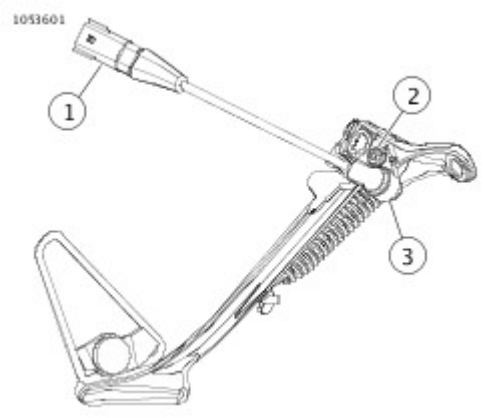

View interactive image

1	Connector
2	Screw
3	Sensor

Figure 1. Jiffy Stand (HDI)

1. Remove jiffy stand. See **Chassis → JIFFY STAND**.
2. Remove main fuse. See **Electrical → POWER DISCONNECT**.

1. Purge fuel system. See **Fuel and Exhaust → PURGE FUEL LINE**.
2. Remove left side cover. See **Chassis → LEFT SIDE COVER**.
3. Remove main fuse. See **Electrical → POWER DISCONNECT**.
4. Remove seat. See **Chassis → SEAT**.
5. Remove fuel tank. See **Fuel and Exhaust → FUEL TANK**.

1. See Figure 1. Disconnect backbone harness interconnect [327].

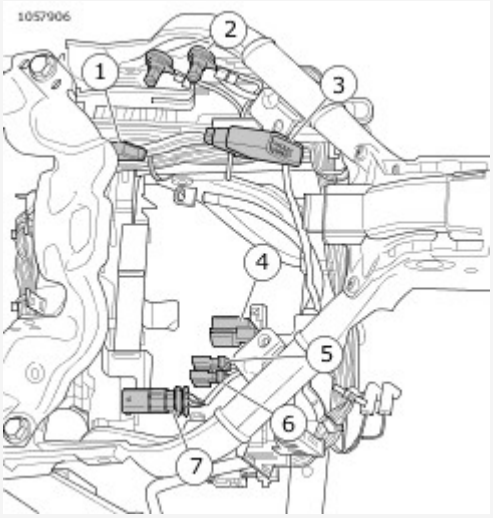

View interactive image

1	Engine harness [145]
2	Frame ground stud (2)
3	Backbone harness interconnect [327]
4	Security antenna [209]
5	Left rear STT (Stop/tail/turn) [19]
6	Right rear STT [18]
7	LP (License plate) [40]

Figure 1. Main Harness Under Seat

2. See Figure 2. Remove brake line clamp screws.

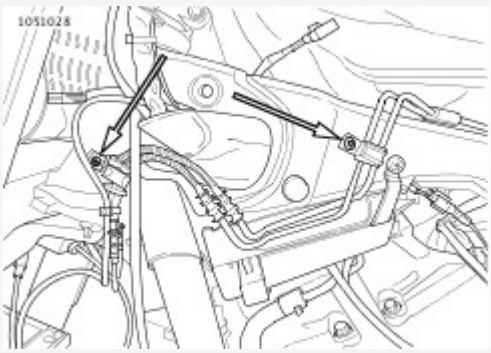

View interactive image

Figure 2. Brake Line Clamps

3. See Figure 4. Remove frame plug and front electrical caddy.

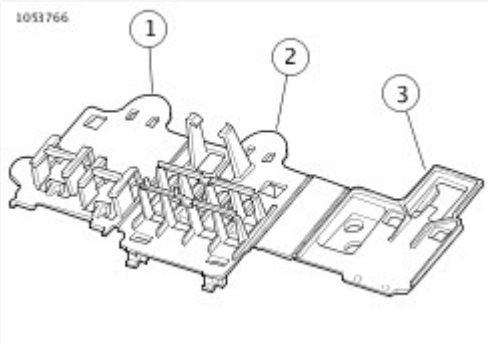

View interactive image

1	Bottom fold
2	Center fold
3	Top fold

Figure 3. Front Electrical Caddy

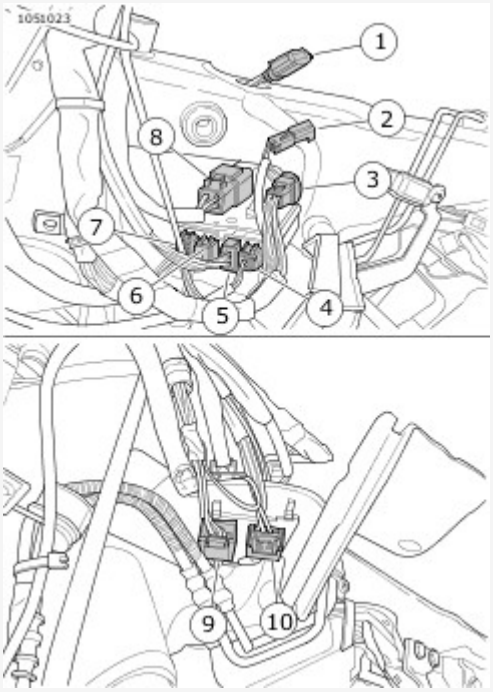

View interactive image

1	Console
2	Heated hand grip
3	Twist grip

4	WSS (Wheel speed sensor)
5	Right turn signal
6	RHCM (Right hand control module) [22-2]
7	RHCM [22-1]
8	Headlamp
9	LHCM (Left hand control module)
10	Left turn signal

Figure 4. Front Electrical Caddy Connectors

4. See Figure 3. Open front electrical caddy.
   a. See Figure 3 and Figure 5. Unlock and open bottom fold (1) that contains frame plug.
   b. Remove frame plug.
   c. See Figure 3 and Figure 6. On top fold (3) disconnect twist grip and headlamp connectors.
   d. Remove twist grip and headlamp connectors from top fold and position out-of-way.
   e. Open caddy.

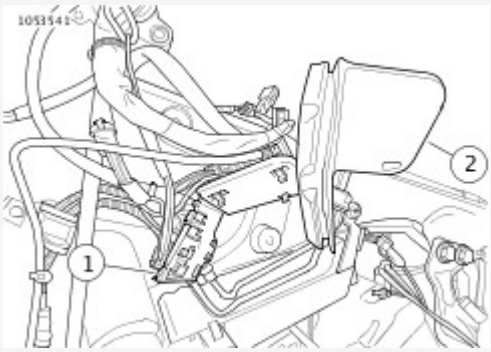

View interactive image

1	Front electrical caddy, bottom fold
2	Frame plug

Figure 5. Front Electrical Caddy Frame Plug

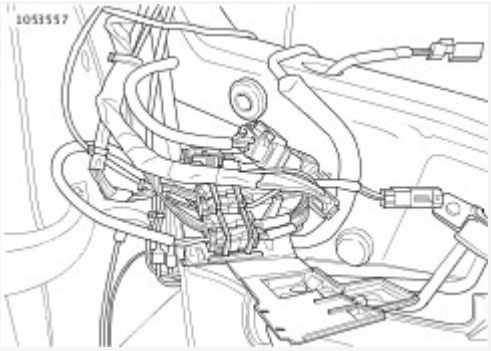

View interactive image

Figure 6. Front Electrical Caddy Open

5.

NOTE

If needed, label each half of the remaining connectors on caddy.

Figure 3 Remove center fold (2) connectors.

a. See Figure 7. Disconnect connectors.

b. See Figure 8. Using a small screwdriver (3), pry the connector locking tab (2) open.

c. See Figure 9. Remove connector (2).

d. Repeat for all connectors in center fold.

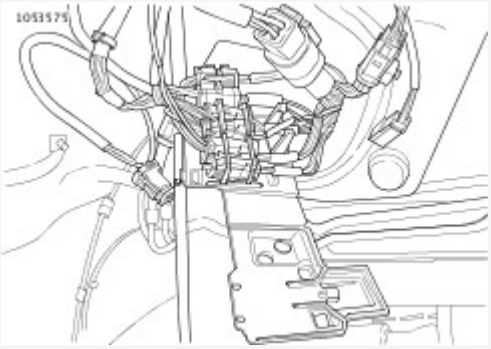

View interactive image

Figure 7. Center Fold Connectors

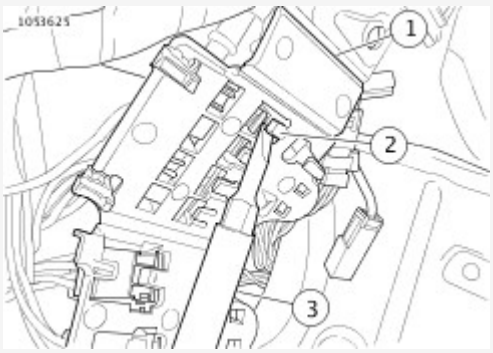

View interactive image

1	Front electrical caddy
2	Locking tab
3	Screwdriver

Figure 8. Center Fold Locking Tab

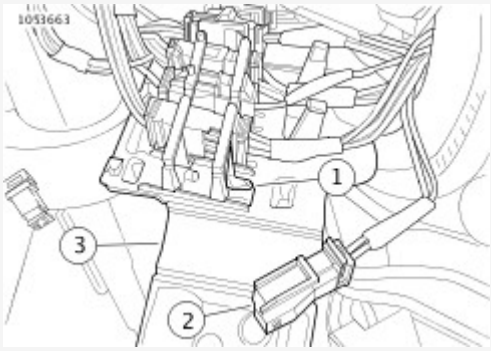

View interactive image

1	Locking tab and screwdriver
2	Connector
3	Front Electrical Caddy

Figure 9. Center Fold Unlocked Connector

6. Figure 3. Remove remaining connectors on bottom fold (1).
    a. Disconnect connectors.
    b. With a wiggling motion, pull connectors from caddy.

1. See **Electrical → FRONT ELECTRICAL CADDY → Remove → Front Electrical Caddy**. Install connectors into bottom fold (1).
   a. Install connector into caddy.
   b. Connect the connectors.
2. Install connectors into center fold (2).
   a. Install connectors into caddy.
   b. Connect the connectors.
3. See **Electrical → FRONT ELECTRICAL CADDY → Remove → Front Electrical Caddy Frame Plug**. Install frame plug (2) onto caddy. Close bottom fold (1).
4. See **Electrical → FRONT ELECTRICAL CADDY → Remove → Front Electrical Caddy Connectors**. Close top fold and install headlamp (8) and twist grip connectors (3).
5. Install front electrical caddy and frame plug into frame.
6. See **Electrical → FRONT ELECTRICAL CADDY → Remove → Brake Line Clamps**. Install brake line clamp screws. Tighten. Torque: 4.1–5.4 N·m (36–48 **in-lbs**) *Brake line clamp screw*
7. See **Electrical → FRONT ELECTRICAL CADDY → Remove → Main Harness Under Seat**. Connect backbone harness interconnect [327].

1. Install fuel tank. See **Fuel and Exhaust → FUEL TANK**.
2. Install seat. See **Chassis → SEAT**.
3. Install main fuse. See **Electrical → POWER DISCONNECT**.
4. Install left side cover. See **Chassis → LEFT SIDE COVER**.

1. Purge fuel system. See **Fuel and Exhaust → PURGE FUEL LINE**.
2. Remove left side cover. See **Chassis → LEFT SIDE COVER**.
3. Remove main fuse. See **Electrical → POWER DISCONNECT**.
4. Remove seat. See **Chassis → SEAT**.
5. Remove fuel tank. See **Fuel and Exhaust → FUEL TANK**.

1. See Figure 1. Remove wide screw (1).

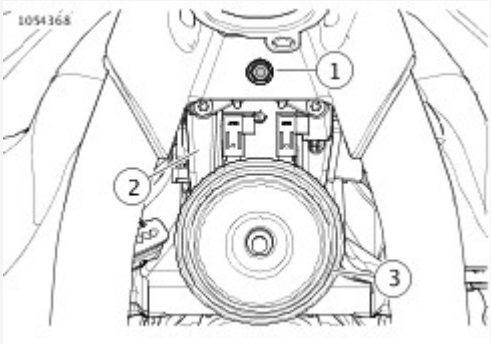

View interactive image

1	Wide screw
2	USB (Universal serial bus) caddy
3	Horn

Figure 1. USB Caddy Front Screw (Typical)

2. See Figure 2. Disconnect ET (Engine temperature) connector (4).
3. Remove retainer pin (1).

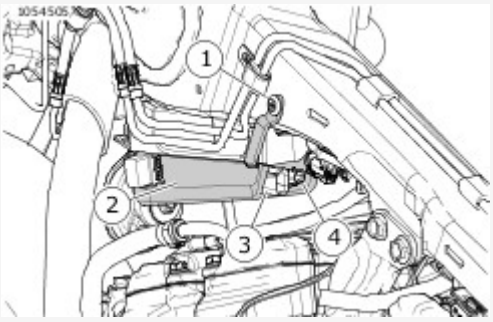

View interactive image

1	Retainer Pin
2	USB caddy
3	Fuel pump connector
4	ET connector

Figure 2. USB Caddy Retainer Pin

4. See Figure 3. Slide USB caddy (2) forward and disconnect USB caddy interconnect (1).
5. Remove USB caddy.

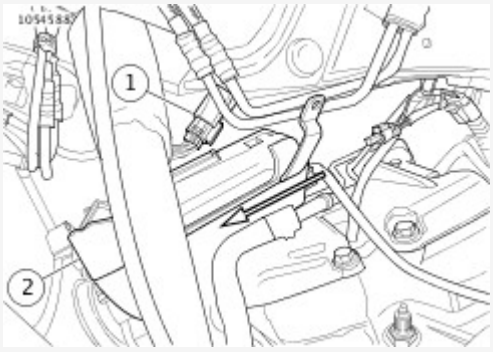

View interactive image

1	USB caddy interconnect
2	USB caddy

Figure 3. USB Caddy Interconnect

1. See **Electrical → USB CADDY → Remove → USB Caddy Interconnect**. Slide **USB** (Universal serial bus) caddy (2) from front of engine and connect **USB** caddy interconnect (1).
   a. See **Figure 1**. Verify main harness tab is installed into main harness slot (5) on **USB** caddy.
2. See **Electrical → USB CADDY → Remove → USB Caddy Retainer Pin**. Install retainer pin (1).
3. Connect **ET** (Engine temperature) connector (4).
4. See **Electrical → USB CADDY → Remove → USB Caddy Front Screw (Typical)**. Install wide screw (1). Tighten.
   Torque: 12–15 N·m (106–133 **in-lbs**) *Wide mounting screw*

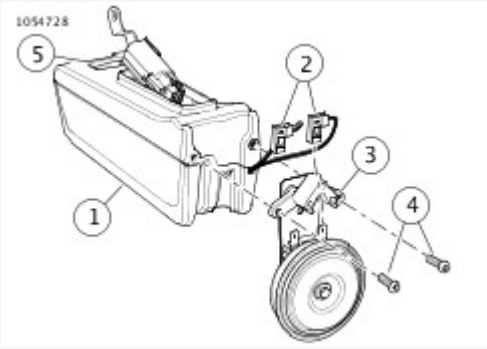

View interactive image

1	USB caddy
2	Horn connector (2)
3	Horn assembly
4	Screw, narrow (2)
5	Main harness slot

Figure 1. USB Caddy Horn Assembly

1. Remove horn assembly. See **Electrical → HORN**.

2. See **Figure 1** Separate **USB** (Universal serial bus) caddy.
   a. Remove screws (4).
   b. Separate **USB** caddy.
   c. Remove harness (2).

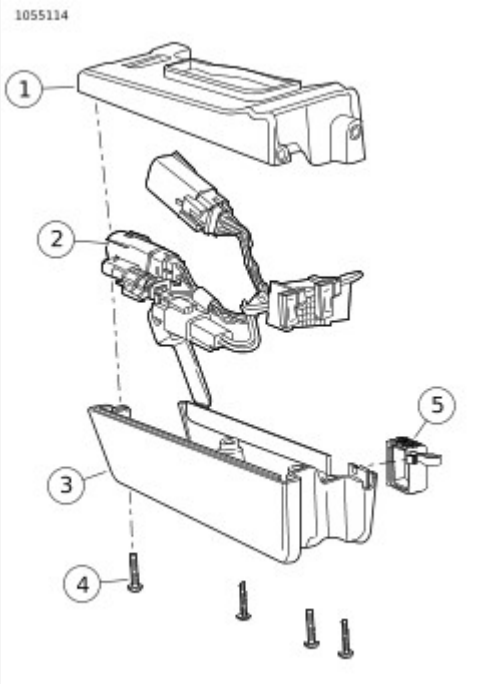

View interactive image

1	**USB** caddy upper
2	**USB** caddy harness
3	**USB** caddy lower
4	Screw (4)
5	Cap

Figure 1. USB Caddy Assembly

1. **Electrical → USB CADDY → Disassemble → USB Caddy Assembly**. Assemble **USB** (Universal serial bus) lower (3) and upper (1) caddy.
   a. Install harness (2) into lower **USB** caddy.
   b. Align **USB** caddy upper and lower.
   c. Install screws (4). Tighten.
      Torque: 1.6–1.9 N·m (14–17 **in-lbs**) *USB caddy screw*
2. Install horn assembly. See **Electrical → HORN**.

1. Install fuel tank. See **Fuel and Exhaust → FUEL TANK**.
2. Install seat. See **Chassis → SEAT**.
3. Install main fuse. See **Electrical → POWER DISCONNECT**.
4. Install left side cover. See **Chassis → LEFT SIDE COVER**.

1. Remove left side cover. See **Chassis → LEFT SIDE COVER**.
2. Remove right side cover. See **Chassis → RIGHT SIDE COVER**.
3. Remove seat. See **Chassis → SEAT**.
4. Disconnect negative battery cable. See **Electrical → POWER DISCONNECT**.
5. Remove battery. See **Maintenance → INSPECT BATTERY**.
6. Remove **ECM** (Electronic control module). See **Electrical → ELECTRONIC CONTROL MODULE (ECM)**.

1. See **Figure 1**. Remove frame ground stud nut (1).
2. Remove ground stud ring terminals (2).
3. Disconnect engine harness connector (2).
4. Remove engine harness connector anchor from **ECM** (Electronic control module) caddy.
5. Remove small screw (3).
6. Remove large screws (7).
7. Discard cable straps (6).
8. From inside of battery tray, remove push pin retainers (5).
9. Remove **ECM** caddy.

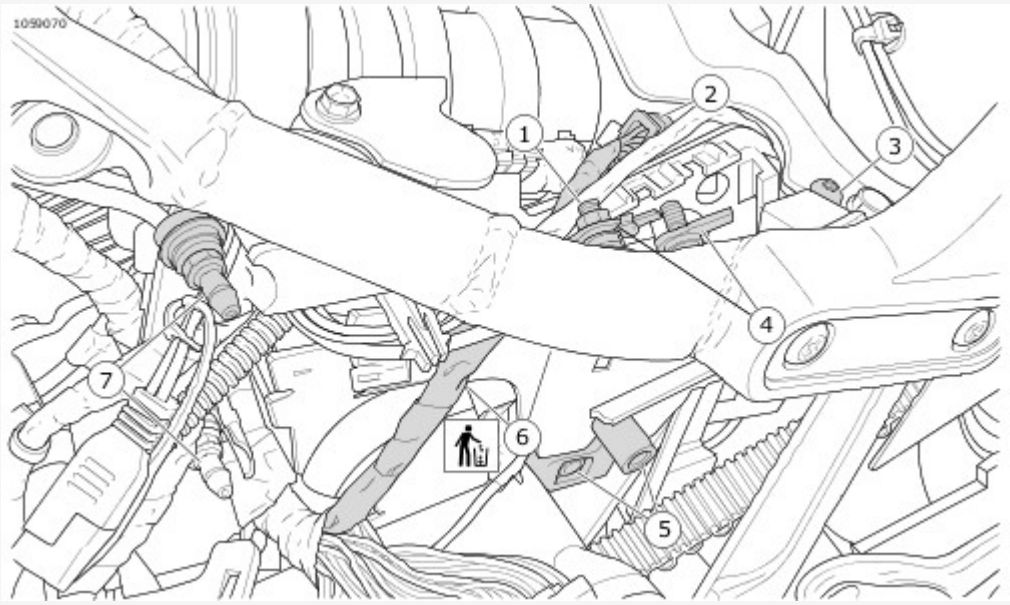

View interactive image

1	Frame ground stud nut
2	Engine harness connector
3	Small screw
4	Ground stud ring terminal (2)
5	Push pin retainer (2)
6	Cable strap (2)
7	Large screw (2)

Figure 1. ECM Caddy

1. Install and align **ECM** (Electronic control module) caddy.
2. See **Electrical → ECM CADDY → Remove → ECM Caddy**.
   Install screws, large (7). Hand tighten.
3. Align wholes in battery tray and **ECM** caddy. Install push pin retainers (5) from battery tray side.
4. Install **new** cable straps (6).
5. Install small screw(3). Tighten.
   Torque: 6.2–6.8 N·m (55–60 **in-lbs**) *ECM caddy small screw*
6. Tighten large screws (7).
   Torque: 4.1–6.8 N·m (36–60 **in-lbs**) *ECM caddy large screw*
7. Install engine harness connector (2) anchor to **ECM** caddy.
8. Connect engine harness connector.
9. Install frame ground stud ring terminals (4).
10. Install frame ground stud nut. Tighten.
    Torque: 5.7–10.2 N·m (50–90 **in-lbs**) *Frame ground stud nut*

1. Install **ECM** (Electronic control module). See **Electrical → ELECTRONIC CONTROL MODULE (ECM)**.
2. Install battery. See **Maintenance → INSPECT BATTERY**.
3. Connect negative battery cable. See **Electrical → POWER DISCONNECT**.
4. Install right side cover. See **Chassis → RIGHT SIDE COVER**.
5. Install left side cover. See **Chassis → LEFT SIDE COVER**.
6. Install seat. See **Chassis → SEAT**.

1. Remove right side cover. See **Chassis → RIGHT SIDE COVER**.
2. Remove seat. See **Chassis → SEAT**.
3. Disconnect negative battery cable. See **Electrical → POWER DISCONNECT**.
4. Remove battery. See **Maintenance → INSPECT BATTERY**.
5. Remove battery tray. See **Electrical → BATTERY TRAY**.
6. Remove **BCM** (Body control module). See **Electrical → BODY CONTROL MODULE (BCM)**.
7. **Models with purge solenoid:** Remove purge solenoid. See **Fuel and Exhaust**.
8. **Security system with siren:** Remove security siren. See **Electrical → SECURITY SIREN**.

1. **Models without purge solenoid:** Disconnect purge solenoid connector from top side of **BCM** (Body control module) caddy.
2. **Security system without siren:** Disconnect security siren connector.
   a. Move **BCM** caddy forward,
   b. Disconnect security siren connector on back side of **BCM** caddy.
3. Remove **BCM** caddy.

1. Install **BCM** (Body control module) caddy.
2. **Security system without siren:** Connect security siren.
   a. Move **BCM** caddy forward.
   b. Connect security siren connector to back side of **BCM** caddy.
3. **Models without purge solenoid:** Connect purge solenoid connector to **BCM** caddy.

1. Install **BCM** (Body control module). See **Electrical → BODY CONTROL MODULE (BCM)**.
2. **Security system with siren:** Install security siren. See **Electrical → SECURITY SIREN**.
3. **Models with purge solenoid:** Install purge solenoid. See **Fuel and Exhaust → PURGE SOLENOID: CALIFORNIA EMISSIONS**.
4. Install battery tray. See **Electrical → BATTERY TRAY**.
5. Install battery. See **Maintenance → INSPECT BATTERY**.
6. Connect negative battery cable. See **Electrical → POWER DISCONNECT**.
7. Install right side cover. See **Chassis → RIGHT SIDE COVER**.
8. Install seat. See **Chassis → SEAT**.

1. Remove main fuse. See **Electrical → POWER DISCONNECT**.
2. Remove seat. See **Chassis → SEAT**.

1. See **Figure 1**. Remove security antenna (5).
2. Remove both **STT** (Stop/tail/turn) connectors (1 and 2).
3. Remove **LP** (License plate) connector.
4. Remove rear lighting caddy.
   a. Remove push pin retainer (4).
   b. Remove caddy.

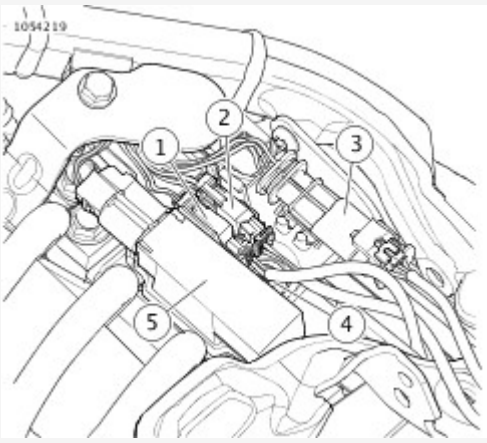

View interactive image

1	**STT** connector
2	**STT** connector
3	**LP** connector
4	Push pin retainer
5	Security antenna

Figure 1. Rear Lighting Caddy

1. Install rear lighting caddy.
   a. Position rear lighting caddy into place.
   b. See **Electrical → REAR LIGHTING CADDY → Remove → Rear Lighting Caddy**. Install push pin retainer (4).
2. Install **LP** (License plate) connector (3).
3. Install both **STT** (Stop/tail/turn) connectors (1 and 2).
4. Install security antenna (5).

1. Install seat. See **Chassis → SEAT**.
2. Install main fuse. See **Electrical → POWER DISCONNECT**.

1. Remove main fuse. See **Electrical → POWER DISCONNECT → Main Fuse**.
2. Remove right side cover. See **Chassis → RIGHT SIDE COVER**.
3. Remove battery. See **Maintenance → INSPECT BATTERY**.

1. Remove plastic fasteners securing ECM caddy to battery tray.
2. Remove plastic fasteners securing BCM caddy to battery tray.
3. See **Electrical → BATTERY TRAY → Install → Battery Tray**.
   Remove battery tray.
   a. Remove screws (1).
   b. Remove battery tray (2).

1. See **Figure 1**. Install battery tray.
   a. Install battery tray (2).
   b. Install screws (1). Tighten.
      Torque: 8.1–12.2 N·m (6–9 ft-lbs) *Battery tray screw*
2. Install plastic fasteners securing BCM caddy to battery tray.
3. Install plastic fasteners securing ECM caddy to battery tray.

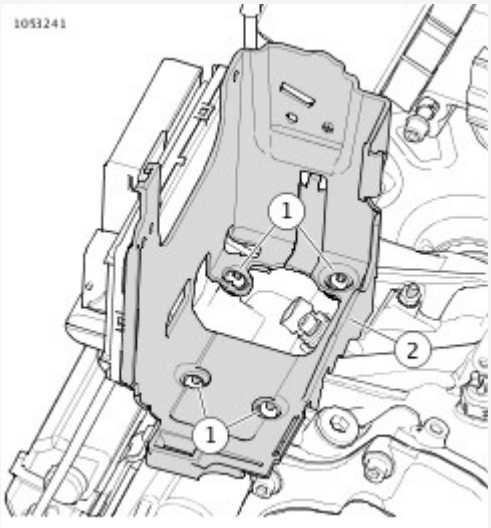

View interactive image

1	Screw (4)
2	Battery tray

Figure 1. Battery Tray

1. Install battery. See **Maintenance → INSPECT BATTERY**.
2. Install right side cover. See **Chassis → RIGHT SIDE COVER**.
3. Install main fuse. See **Electrical → POWER DISCONNECT → Main Fuse**.

1. Remove right side cover. See **Chassis → RIGHT SIDE COVER**.
2. Remove seat. See **Chassis → SEAT**.
3. Remove negative cable. See **Electrical → POWER DISCONNECT**.
4. Remove battery. See **Maintenance → INSPECT BATTERY**.
5. Remove battery tray. See**Electrical → BATTERY TRAY**

1. See Figure 1. Remove battery ground cable on rear frame ground stud (1).

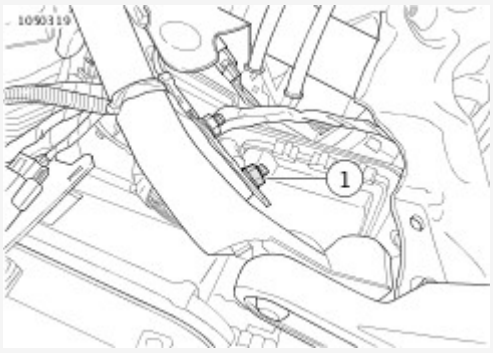

View interactive image

1	Rear frame ground stud nut

Figure 1. Rear Frame Ground Stud

2. See Figure 2. Remove battery ground cable (1) on transmission ground stud (3).

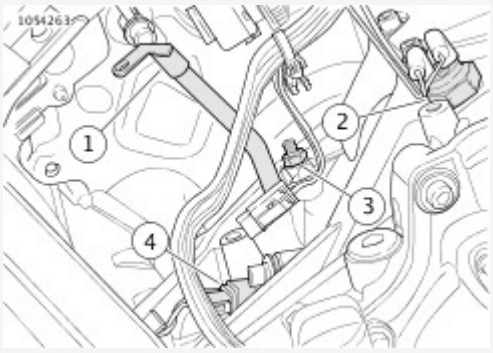

View interactive image

1	Battery ground cable
2	Neutral switch
3	Transmission ground stud and nut
4	VSS (Vehicle speed sensor)

Figure 2. Battery Ground Cable: (Starter removed for clarity)

1. See **Electrical → ENGINE GROUND CABLE → Remove → Battery Ground Cable: (Starter removed for clarity)**. Install battery ground cable on transmission ground stud (3).
2. Install nut hand tight on transmission ground stud.
3. See **Electrical → ENGINE GROUND CABLE → Remove → Rear Frame Ground Stud**. Route battery ground cable to rear frame ground stud. Install nut. Tighten.
   Torque: 5.6–10.2 N·m (50–90 **in-lbs**) *Frame ground stud nut*
4. Tighten transmission ground stud nut.
   Torque: 8.1–10.9 N·m (72–96 **in-lbs**) *Transmission ground stud nut*

1. Install battery tray. See **Electrical → BATTERY TRAY**
2. Install battery. See **Maintenance → INSPECT BATTERY**.
3. Install negative cables. See **Electrical → POWER DISCONNECT**.
4. Install seat. See **Chassis → SEAT**.
5. Install right side cover. See **Chassis → RIGHT SIDE COVER**.

1. Purge fuel system. See **Fuel and Exhaust → PURGE FUEL LINE**.
2. Remove left side cover. See **Chassis → LEFT SIDE COVER**.
3. Remove right side cover. See **Chassis → RIGHT SIDE COVER**.
4. Remove main fuse. See **Electrical → POWER DISCONNECT**.
5. Remove seat. See **Chassis → SEAT**.
6. Remove fuel tank. See **Fuel and Exhaust → FUEL TANK**.
7. Remove battery. See **Maintenance → INSPECT BATTERY**.
8. Remove battery tray. See **Electrical → BATTERY TRAY**.
9. Remove air filter. See **Maintenance → INSPECT AIR FILTER**.
10. Remove air cleaner backplate. See **Fuel and Exhaust → AIR CLEANER BACKPLATE ASSEMBLY**.
11. Remove **ECM** (Electronic control module). See **Electrical → ELECTRONIC CONTROL MODULE (ECM)**.
12. Remove coil. See **Electrical → IGNITION COIL**.
13. Remove left side engine mount. See **Engine → LEFT SIDE ENGINE MOUNT**.

1.

NOTE

Remove cable strap anchors, wire harness anchors and cable straps as necessary.

See **Figure 1**. Disconnect electrical connectors around throttle body area.

a. Disconnect **ETC** (Electronic throttle control) (18).

b. Disconnect **TMAP** (Temperature, intake air / Manifold absolute pressure) (15).

c. Disconnect front injector (13).

d. Disconnect rear injector (12).

e. Disconnect front knock sensor (11).

f. Disconnect front **ACR** (Automatic compression release) (10).

2. Disconnect electrical connectors around rear cylinder/**ECM** (Electronic control module) area.

a. Disconnect engine harness (2).

b. Disconnect engine harness interconnect (7).

c. Disconnect rear knock sensor (8).

d. Disconnect rear **ACR** (9).

3. Disconnect electrical connectors around starter/**BCM** (Body control module) area.

a. Disconnect purge solenoid (1).

b. Disconnect rear **HO2S** (Heated oxygen sensor) (16).

c. Disconnect **VSS** (Vehicle speed sensor) (17).

4. Disconnect electrical connectors around voltage regulator/oil pressure sensor area.

a. Disconnect oil pressure sensor (19).

b. Disconnect front **HO2S** (20).

c. Disconnect **JSS** (Jiffy stand sensor) (21).

d. Disconnect **CKP** (Crankshaft position) (22).

5. Remove engine wire harness.

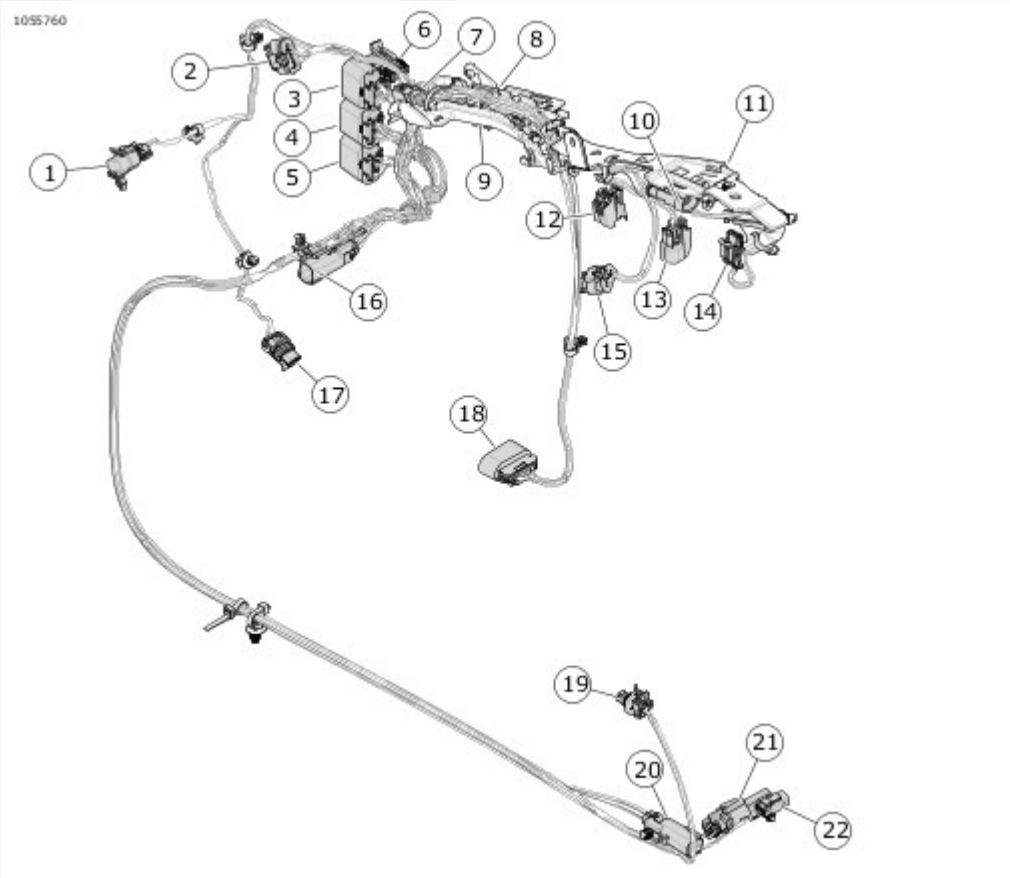

View interactive image

1	Purge solenoid [95]
2	Engine harness [145]
3	ECM [78-1] (BK)
4	ECM [78-2] (GY)
5	ECM [78-3] (BN)
6	Fuse block, system power [332]
7	Engine harness interconnect [328]
8	Rear knock sensor [316]
9	Rear ACR [203R]
10	Front ACR [203F]
11	Front knock sensor [315]
12	Rear injector [85]
13	Front injector [84]
14	Coil [83]
15	TMAP [80]

16	Rear HO2S [137]
17	VSS [65]
18	ETC [211]
19	Oil pressure sensor [120]
20	Front HO2S [138]
21	JSS [133]
22	CKP sensor [79]

Figure 1. Engine Wire Harness

1. Install engine wire harness.
2. See **Electrical → ENGINE WIRE HARNESS → Remove → Engine Wire Harness**. Connect electrical connectors around voltage regulator/oil pressure sensor area.
   a. Connect **CKP** (Crankshaft position) (22).
   b. Connect **JSS** (Jiffy stand sensor) (21).
   c. Connect front **HO2S** (Heated oxygen sensor) (20).
   d. Connect oil pressure sensor (19).
3. Connect electrical connectors around starter/**BCM** (Body control module) area.
   a. Connect **VSS** (Vehicle speed sensor) (17).
   b. Connect rear **HO2S** (16).
   c. Connect purge solenoid (1).
4. Connect electrical connectors around rear cylinder/**ECM** (Electronic control module) area.
   a. Connect rear **ACR** (Automatic compression release) (9).
   b. Connect rear knock sensor (8).
   c. Connect engine harness interconnect (7).
   d. Connect engine harness (2).
5. Connect electrical connectors around throttle body area.
   a. Connect front **ACR** (10).
   b. Connect front knock sensor (11).
   c. Connect rear injector (12).
   d. Connect front injector (13).
   e. Disconnect **TMAP** (Temperature, intake air / Manifold absolute pressure) (15).
   f. Connect **ETC** (Electronic throttle control) (18).

1. Install left side engine mount. See **Engine → LEFT SIDE ENGINE MOUNT**.
2. Install coil. See **Electrical → IGNITION COIL**.
3. Install **ECM** (Electronic control module). See **Electrical → ELECTRONIC CONTROL MODULE (ECM)**.
4. Install air cleaner backplate assembly. See **Fuel and Exhaust → AIR CLEANER BACKPLATE ASSEMBLY**.
5. Install air filter. See **Maintenance → INSPECT AIR FILTER**.
6. Install battery tray. See **Electrical → BATTERY TRAY**.
7. Install battery. See **Maintenance → INSPECT BATTERY**.
8. Install fuel tank. See **Fuel and Exhaust → FUEL TANK**.
9. Install seat. See **Chassis → SEAT**.
10. Install main fuse. See **Electrical → POWER DISCONNECT**.
11. Install right side cover. See **Chassis → RIGHT SIDE COVER**.
12. Install left side cover. See **Chassis → LEFT SIDE COVER**.

1. Purge fuel system. See **Fuel and Exhaust → PURGE FUEL LINE**.
2. Remove left side cover. See **Chassis → LEFT SIDE COVER**.
3. Remove main fuse. See **Electrical → POWER DISCONNECT**.
4. Remove seat. See **Chassis → SEAT**.
5. Remove fuel tank. See **Fuel and Exhaust → FUEL TANK**.

1. See Figure 1. Disconnect backbone harness interconnect [327] (3).

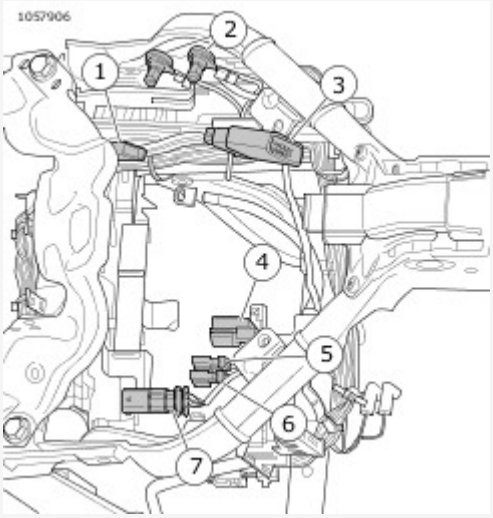

View interactive image

1	Engine harness [145]
2	Frame ground stud (2)
3	Backbone harness interconnect [327]
4	Security antenna [209]
5	Left rear STT (Stop/tail/turn) [19]
6	Right rear STT [18]
7	LP (License plate) [40]

Figure 1. Main Harness Under Seat

2. See Figure 2. Remove brake line clamp screws.

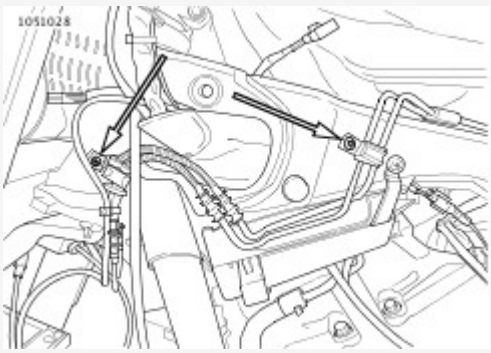

View interactive image

Figure 2. Brake Line Clamps

3. See Figure 3. Remove frame plug and front electrical caddy.
4. Disconnect all connectors in front electrical caddy.
5. From the inside of the frame backbone, disconnect USB caddy interconnect [319].

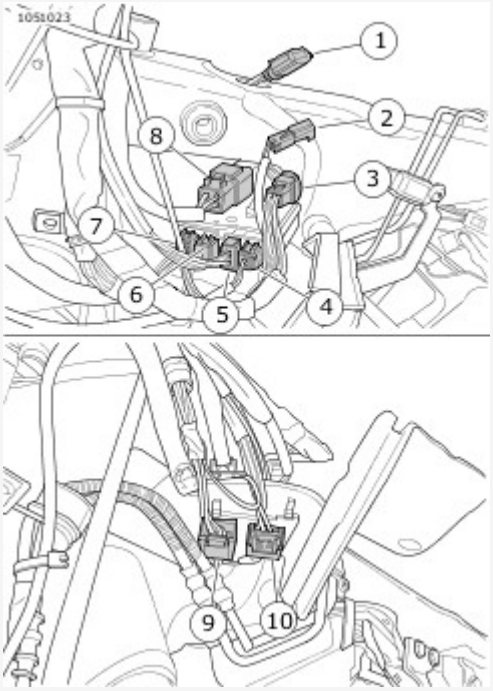

View interactive image

1	Console
2	Heated hand grip
3	Twist grip
4	WSS (Wheel speed sensor)
5	Right turn signal
6	RHCM (Right hand control module) [22-2]
7	RHCM [22-1]
8	Headlamp
9	LHCM (Left hand control module)
10	Left turn signal

Figure 3. Front Electrical Caddy Connectors

6. See Figure 4. Remove under seat frame cover (2).
   a. Remove small screw (1).

b. Remove both large screws (3).

c. Remove under seat frame cover.

7. Disconnect and lower engine harness support (4).

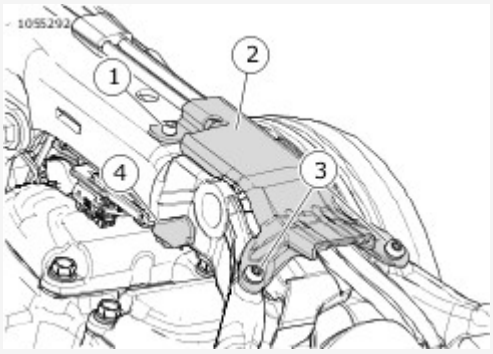

View interactive image

1	Screw, small
2	Under seat frame cover
3	Screw, large (2)
4	Engine harness support

Figure 4. Under Seat Frame Cover (Typical)

8. See Figure 5. Move engine harness support (1) outward.
9. Disconnect engine harness connector (2) from backbone wire harness (3).

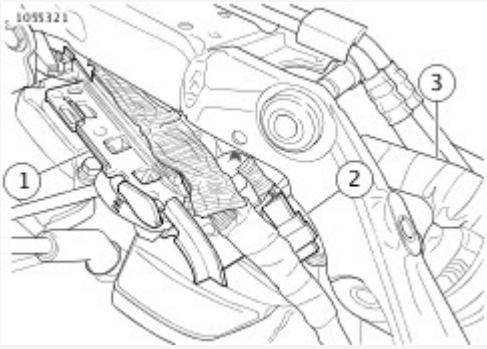

View interactive image

1	Engine harness support
2	Engine harness connector
3	Backbone wire harness

Figure 5. Engine Harness Support

10. Remove backbone wire harness.
    a. Attach scrap wire to backbone harness interconnect.
    b. Pull backbone wire harness through backbone.
    c. Disconnect scrap wire from old backbone harness interconnect connector.

1. Route backbone wire harness through backbone.
   a. Attach scrap wire to backbone harness interconnect.
   b. Pull backbone wire harness through backbone.
   c. Remove scrap wire.
2. See **Electrical → BACKBONE WIRE HARNESS → Remove → Engine Harness Support**. Connect engine harness connector (2) to backbone wire harness (3).
3. See **Electrical → BACKBONE WIRE HARNESS → Remove → Under Seat Frame Cover (Typical)**. Move engine harness support inward and connect to backbone (4).
4. Install under seat frame cover (2).
   a. Align under seat frame cover to frame.
   b. Install large screws (3). Hand tight.
   c. Install small screw. Tighten
      Torque: 2.3–3.4 N·m (20–30 **in-lbs**) *Cover, under seat frame, small screw*
   d. Tighten large screws.
      Torque: 10.9–13.6 N·m (96–120 **in-lbs**) *Cover, under seat frame, large screw*
5. Install front electrical caddy and frame plug.
   a. Connect USB interconnect.
   b. See **Electrical → BACKBONE WIRE HARNESS → Remove → Front Electrical Caddy Connectors**. Connect all connectors in front electrical caddy.
   c. Place front electrical caddy into frame, and install frame plug.
6. See **Electrical → BACKBONE WIRE HARNESS → Remove → Brake Line Clamps**. Install brake clamp screws. Tighten.
   Torque: 4.1–5.4 N·m (36–48 **in-lbs**) *Brake line clamp screw*

1. Install fuel tank. See **Fuel and Exhaust → FUEL TANK**.
2. Install seat. See **Chassis → SEAT**.
3. Install main fuse. See **Electrical → POWER DISCONNECT**.
4. Install left side cover. See **Chassis → LEFT SIDE COVER**.

1. Remove left side cover. See **Chassis → LEFT SIDE COVER**.
2. Remove right side cover. See **Chassis → RIGHT SIDE COVER**.
3. Remove seat. See **Chassis → SEAT**.
4. Remove battery. See **Maintenance → INSPECT BATTERY**.
5. Remove battery tray. See **Electrical → BATTERY TRAY**.
6. Remove **ECM** (Electronic control module). See **Electrical → ELECTRONIC CONTROL MODULE (ECM)**.
7. Remove **ECM** caddy. See **Electrical → ECM CADDY**.

1.

NOTE

Note locations of and remove cable strap anchors, wire harness anchors and cable straps as necessary.

See Figure 1. Disconnect electrical connectors around voltage regulator.

a. Disconnect voltage regulator (2).

b. Disconnect rear brake switch (1).

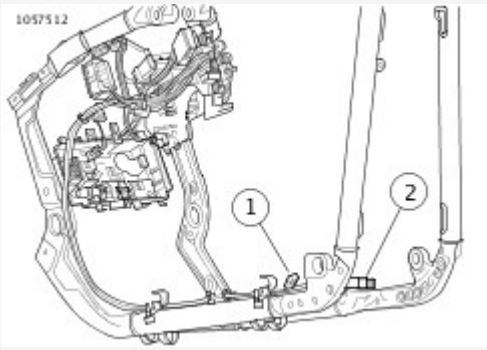

View interactive image

1	Rear brake switch [121] (2)
2	Voltage regulator [77]

Figure 1. Main Harness Front

2. See Figure 2. Disconnect electrical connectors from right side.

   a. **If equipped:** Disconnect ABS (Anti-lock braking system) module (2).

   b. **If equipped:** Disconnect rear WSS (Wheel speed sensor) (4).

   c. Disconnect neutral switch (3).

   d. Disconnect battery power on starter stud (5).

   e. Disconnect starter solenoid power (1).

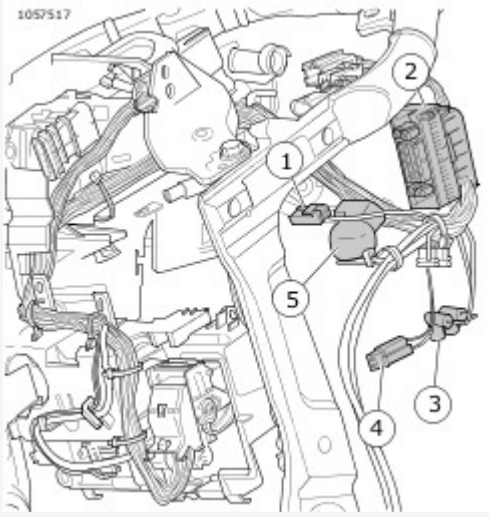

View interactive image

1	Starter solenoid power [128]
2	ABS module [166]
3	Neutral switch [131] (2)
4	Rear WSS [168]
5	Battery power starter stud

Figure 2. Main Harness Right Side

3. See Figure 3. Disconnect electrical connectors under seat.
   a. Disconnect right rear STT (Stop/tail/turn) lighting (6) and remove from rear lighting caddy.
   b. Disconnect left rear STT lighting (5) and remove from rear lighting caddy.
   c. Disconnect LP (License plate) lighting (7) and remove from rear lighting caddy.
   d. Disconnect security antenna (4) and remove from rear lighting caddy.
   e. Remove both frame ground studs nuts (2). Remove shunt and all ring terminals.
   f. Disconnect engine harness (1).
   g. Disconnect backbone harness interconnect (3).

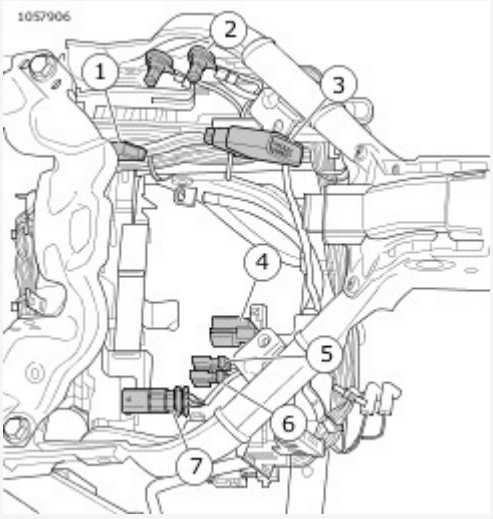

View interactive image

1	Engine harness [145]
2	Frame ground stud (2)
3	Backbone harness interconnect [327]
4	Security antenna [209]
5	Left rear STT [19]
6	Right rear STT [18]
7	LP [40]

Figure 3. Main Harness Under Seat

4. See Figure 4. Disconnect electrical connectors from left side.
   a. Remove DLC (Data link connector) from ECM (Electronic control module) caddy.
   b. Remove battery tender (5) from ECM sub caddy (6).
   c. **If connected:** Disconnect P&A power (2) and remove from ECM sub caddy.
   d. Remove fuse block (4) from ECM sub caddy.
   e. Remove CAN (Controller area network) termination (1) from ECM sub caddy.
5. Remove main wire harness.

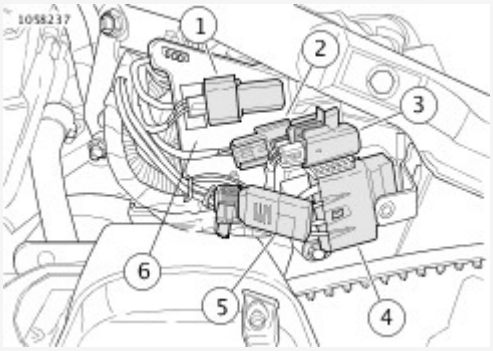

View interactive image

1	CAN termination [319]
2	P&A power [325]
3	Fuse block, system power [332]
4	Fuse block [64]
5	Battery tender [281]
6	ECM sub caddy

Figure 4. Under Left Side Cover

1. Route main wire harness into place.
2. See **Electrical → MAIN WIRE HARNESS → Remove → Under Left Side Cover**. Connect electrical connectors from left side.
   a. Install **CAN** (Controller area network) termination (1) to **ECM** (Electronic control module) sub caddy (6).
   b. Install fuse block (4) to **ECM** sub caddy.
   c. **If needed:** Connect P&A power (2) and install to **ECM** sub caddy.
   d. Install battery tender (5) to **ECM** sub caddy.
   e. Install **DLC** (Data link connector) to **ECM** caddy.
3. See **Electrical → MAIN WIRE HARNESS → Remove → Main Harness Under Seat**. Connect electrical connectors under seat.
   a. Connect backbone harness interconnect (3).
   b. Connect engine harness (1).
   c. Install shunt and all ring terminals. Install both frame ground studs nuts (2). Tighten.
      Torque: 5.6–10.2 N·m (50–90 **in-lbs**) *Frame ground stud nut*
   d. Connect security antenna (4) and install onto rear lighting caddy.
   e. Connect **LP** (License plate) lighting (7) and install onto rear lighting caddy.
   f. Connect left rear **STT** (Stop/tail/turn) lighting (5) and install onto rear lighting caddy.
   g. Connect right rear **STT** lighting (6) and install onto rear lighting caddy.
4. See **Electrical → MAIN WIRE HARNESS → Remove → Main Harness Right Side**. Connect electrical connectors from right side.
   a. Connect starter solenoid power (1).
   b. Connect battery power on starter stud (5).
   c. Connect neutral switch (3).
   d. **If equipped:** Connect rear **WSS** (Wheel speed sensor) (4).
   e. **If equipped:** Connect **ABS** (Anti-lock braking system) module (2).
5. See **Electrical → MAIN WIRE HARNESS → Remove → Main Harness Front**. Connect electrical connectors around voltage regulator.
   a. Connect rear brake switch (1).
   b. Connect voltage regulator (2).

1. See **Electrical → MAIN WIRE HARNESS → Remove → Under Left Side Cover**. Remove all fuse from fuse blocks.
   a. Remove fuses from fuse block [64] (4).
   b. Remove fuse from fuse block [332] (3).
2. Disconnect and remove **BCM** (Body control module) from **BCM** caddy.
3. **If equipped:** Remove security siren from **BCM** caddy.

1. Install and connect security siren into **BCM** (Body control module) caddy.
2. Install and connect **BCM** into caddy.
3.

NOTE
Verify all fuses are good before installation. See the electrical diagnostic manual.

See **Electrical → MAIN WIRE HARNESS → Remove → Under Left Side Cover**. Install all fuses into fuse blocks.

   a. Install system power fuse into fuse block [332] (3).
   b. Install fuses into fuse block [64] (4).

1. Install **ECM** (Electronic control module) caddy. See **Electrical → ECM CADDY**.
2. Install battery tray. See **Electrical → BATTERY TRAY**.
3. Install battery. See **Maintenance → INSPECT BATTERY**.
4. Install **ECM**. See **Electrical → ELECTRONIC CONTROL MODULE (ECM)**
5. Install negative battery cable. See **Electrical → POWER DISCONNECT**.
6. Install right side cover. See **Chassis → RIGHT SIDE COVER**.
7. Install left side cover. See **Chassis → LEFT SIDE COVER**.
8. Install seat. See **Chassis → SEAT**.

Wire Color Codes

Wire traces on wiring diagrams are labeled with alpha codes. Refer to Table 1.

For Solid Color Wires: See Figure 1. The alpha code identifies wire color.

For Striped Wires: The code is written with a slash (/) between the solid color code and the stripe code. For example, a trace labeled GN/Y is a green wire with a yellow stripe.

Wiring Diagram Symbols

See Figure 1. On wiring diagrams and in service/repair instructions, connectors are identified by a number in brackets [ ]. The letter inside the brackets identifies whether the housing is a socket or pin housing.

A=Pin: The letter A and the pin symbol after a connector number identifies the pin side of the terminal connectors.

B=Socket: The letter B and the socket symbol after a connector number identifies the socket side of the terminal connectors. Other symbols found on the wiring diagrams include the following:

Diode: The diode allows current flow in one direction only in a circuit.

Wire break: The wire breaks are used to show option variances or page breaks.

No Connection: Two wires crossing over each other in a wiring diagram that are shown with no splice indicating they are not connected together.

Circuit to/from: This symbol indicates a more complete circuit diagram on another page. The symbol is also identifying the direction of current flow.

Splice: Splices are where two or more wires are connected together along a wiring diagram. The indication of a splice only indicates that wires are spliced to that circuit. It is not the true location of the splice in the wiring harness.

Ground: Grounds can be classified as either clean or dirty grounds. Clean grounds are identified by a (BK/GN) wire and are normally used for sensors or modules.

NOTE

Clean grounds usually do not have electric motors, coils or anything that may cause electrical interference on the ground circuit.

Dirty grounds are identified by a (BK) wire and are used for components that are not as sensitive to electrical interference.

Twisted pair: This symbol indicates the two wires are twisted together in the harness. This minimizes the circuit's electromagnetic interference from external sources. If repairs are necessary to these wires they should remain as twisted wires.

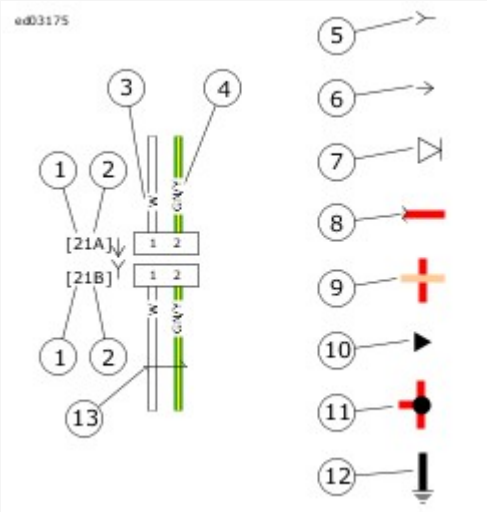

View interactive image

1	Connector number
2	Terminal code (A=pin, B=socket)
3	Solid wire color
4	Striped wire color
5	Socket symbol
6	Pin symbol
7	Diode
8	Wire break
9	No connection
10	Circuit to/from
11	Splice
12	Ground
13	Twisted pair

Figure 1. Connector/Wiring Diagram Symbols

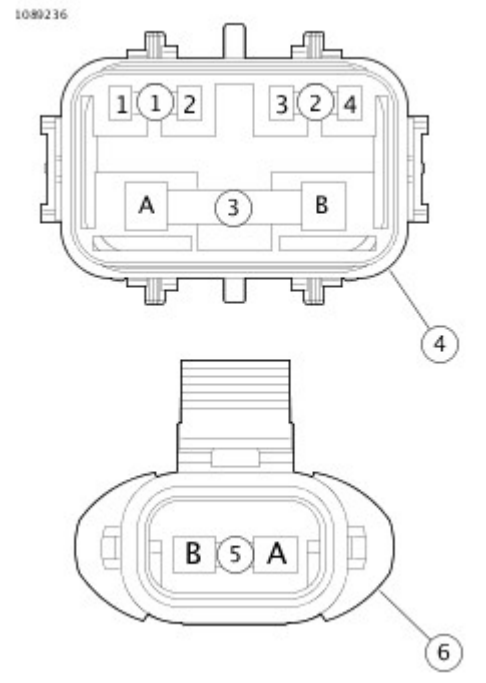

View interactive image

1	Battery
2	Battery tender
3	Main
4	Fuse block [64]
5	System power
6	Fuse block [332]

Figure 2. Fuse Blocks and Socket Terminals

Table 1. Wire Color Codes

ALPHA CODE	WIRE COLOR
BE	Blue
BK	Black
BN	Brown
GN	Green
GY	Gray
LBE	Light Blue
LGN	Light Green
O	Orange

PK	Pink
R	Red
TN	Tan
V	Violet
W	White
Y	Yellow

Refer to the table below for wiring diagram information.

WIRING DIAGRAM LIST

FIGURE	NUMBER
Power Distribution: 2019 Softail	Figure 1.
Sensor Grounds: 2019 Softail	Figure 2.
Ground Circuit: 2019 Softail	Figure 3.
Front Lighting and Hand Controls: 2019 Softail	Figure 4.
Backbone Harness 1 of 3: 2019 Softail	Figure 5.
Engine Harness 2 of 3: 2019 Softail	Figure 6.
Main Harness 3 of 3: 2019 Softail	Figure 7.
Rear Lighting: 2019 Softail	Figure 8.

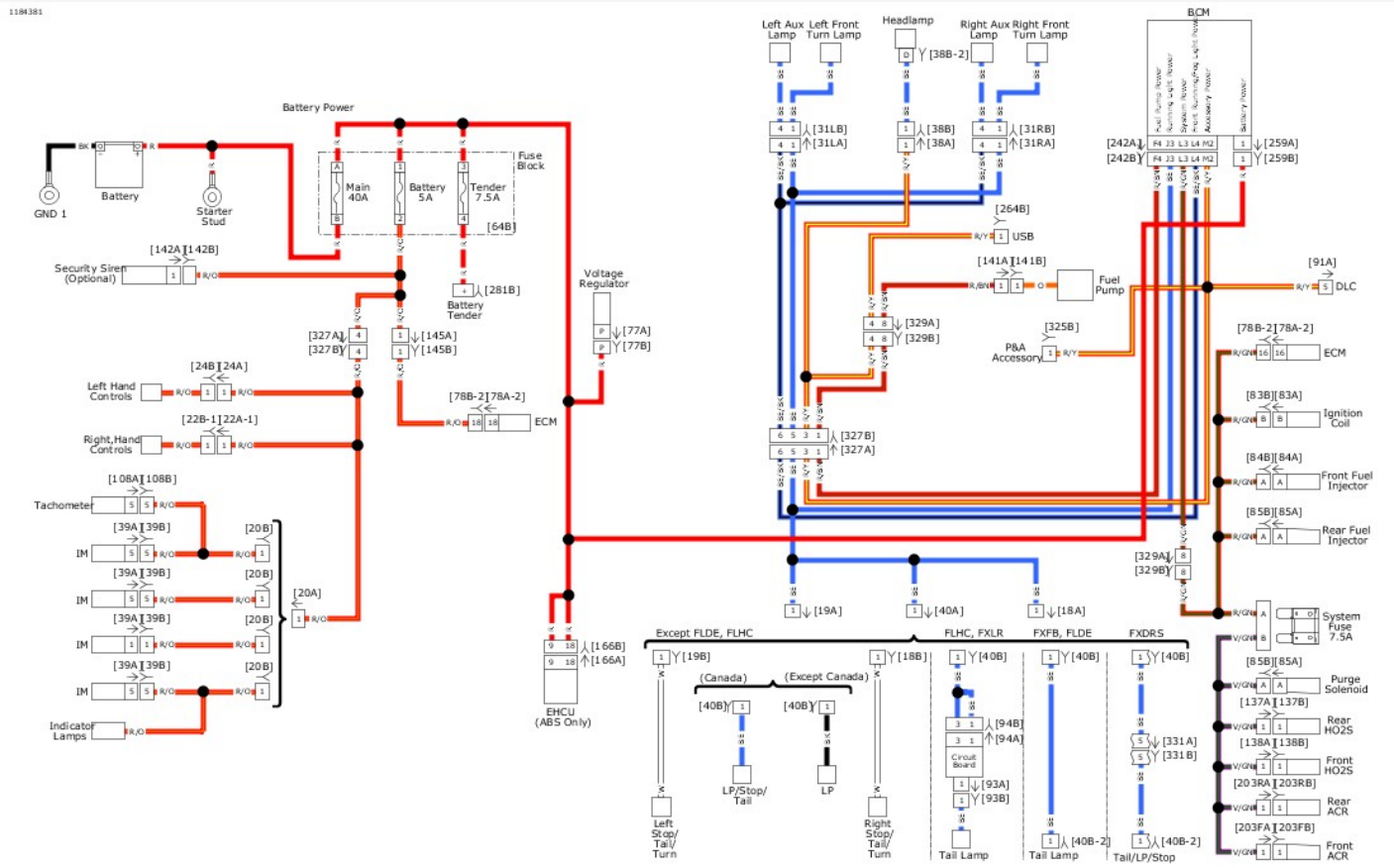

View interactive image

Figure 1. Power Distribution: 2019 Softail

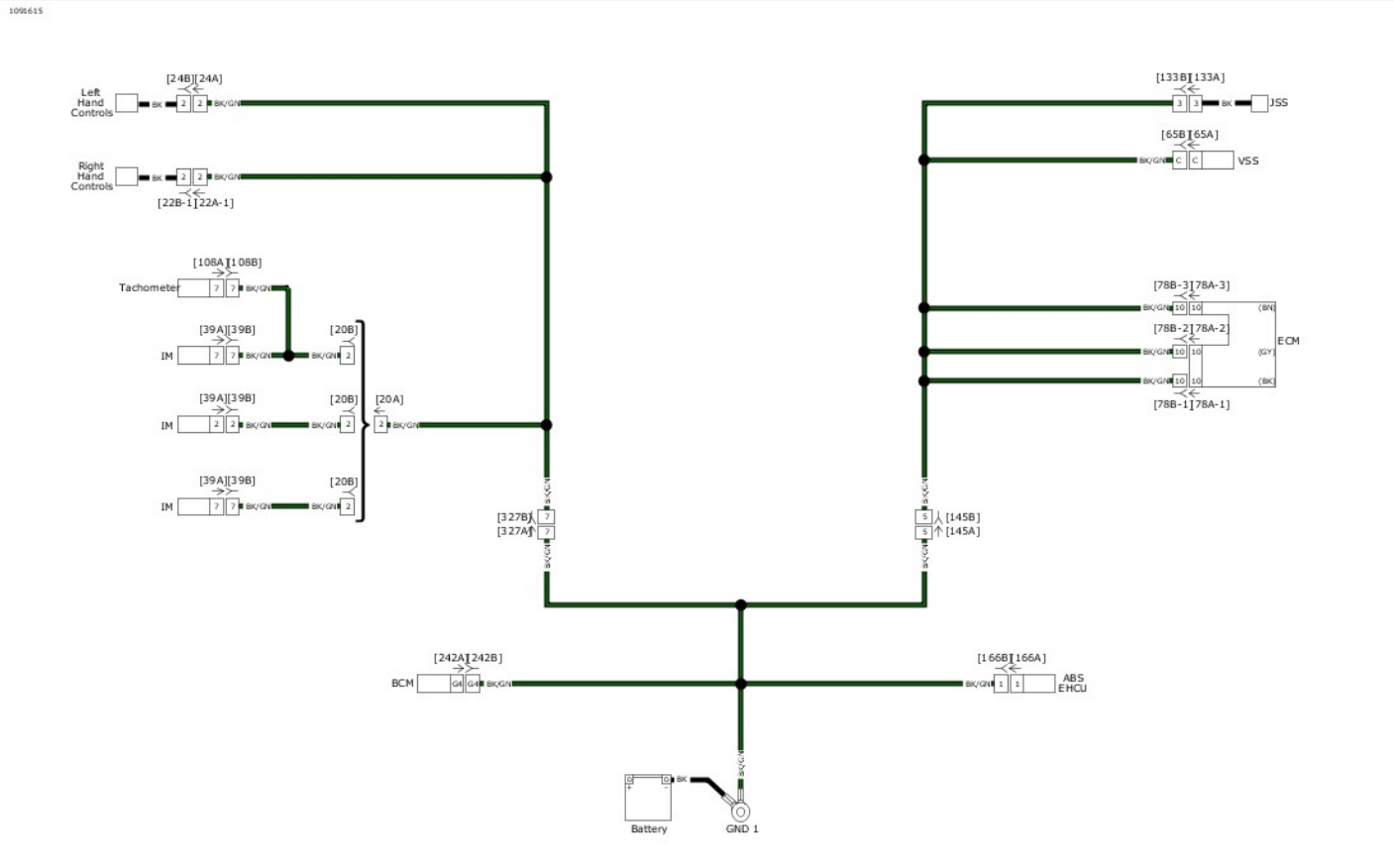

View interactive image

Figure 2. Sensor Grounds: 2019 Softail

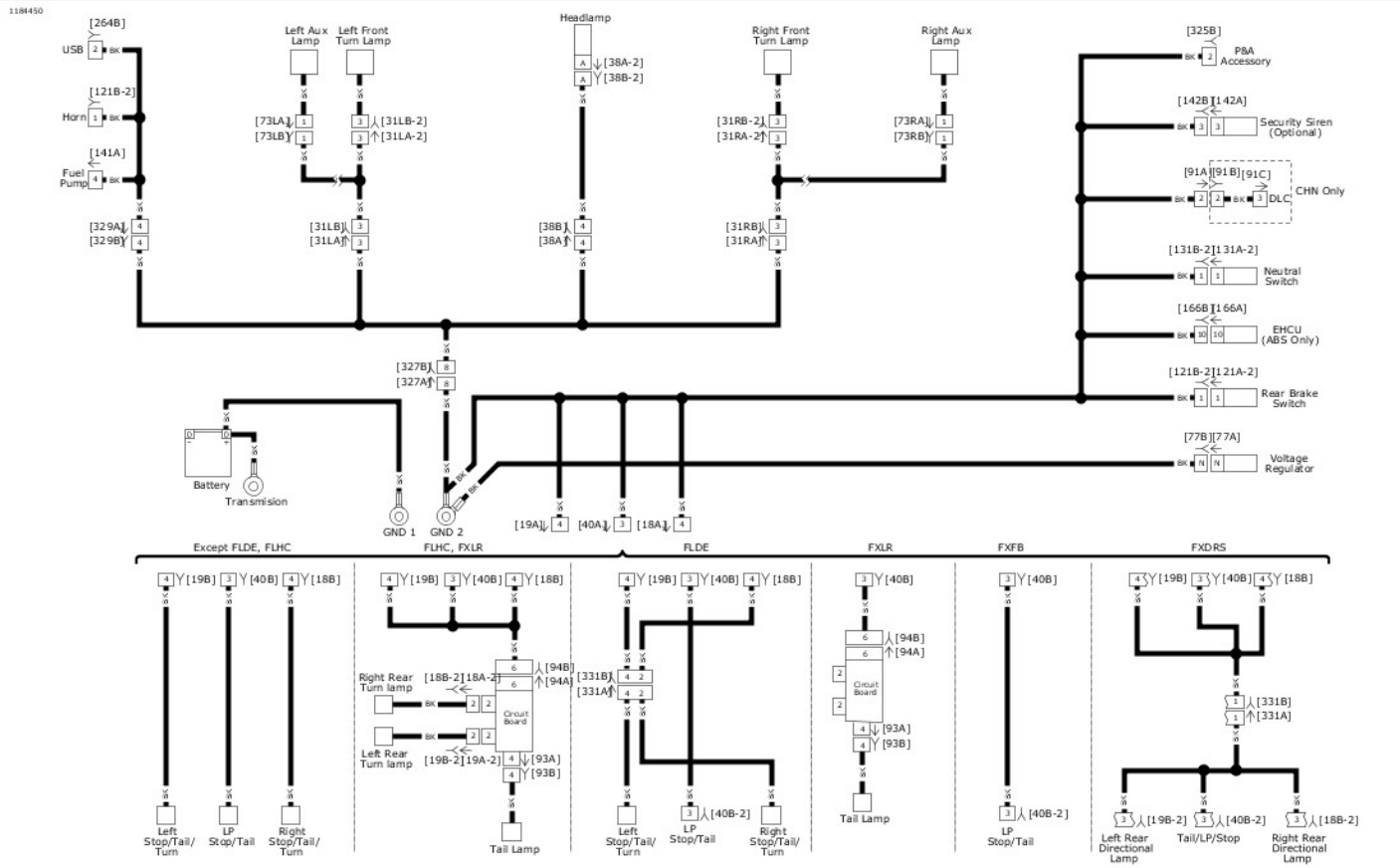

View interactive image

View interactive image

Figure 3. Ground Circuit: 2019 Softail

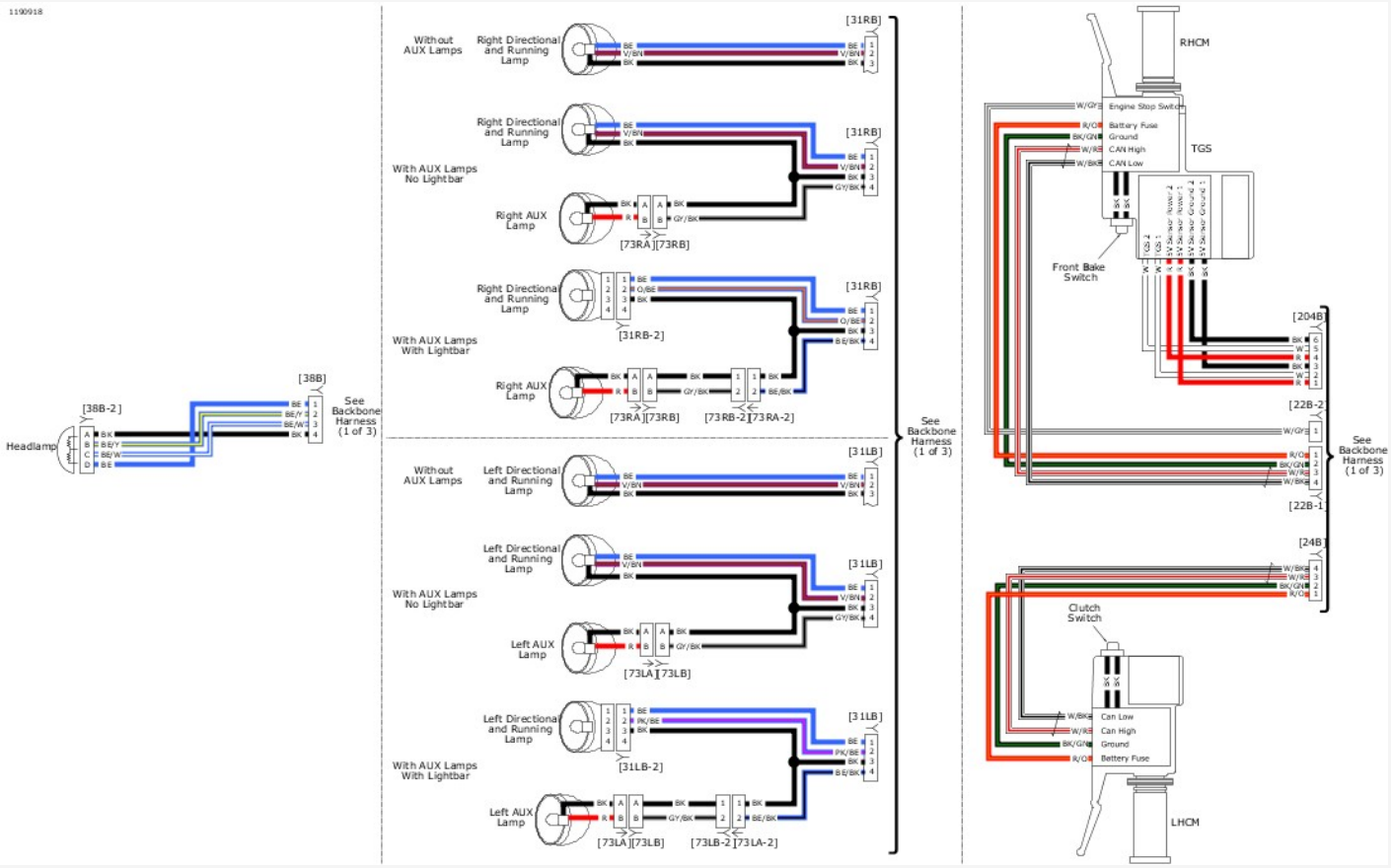

View interactive image

Figure 4. Front Lighting and Hand Controls: 2019 Softail

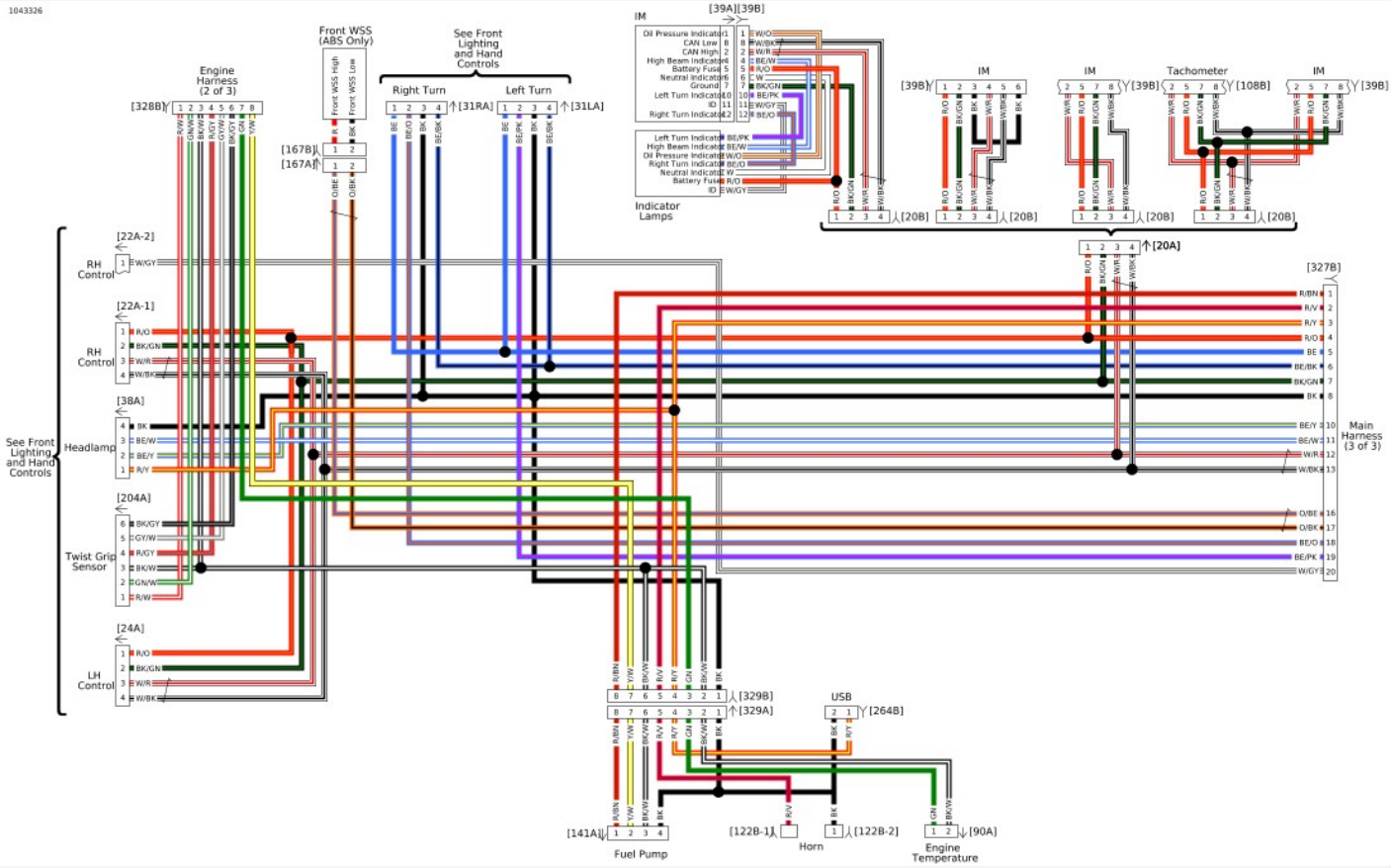

View interactive image

Figure 5. Backbone Harness 1 of 3: 2019 Softail

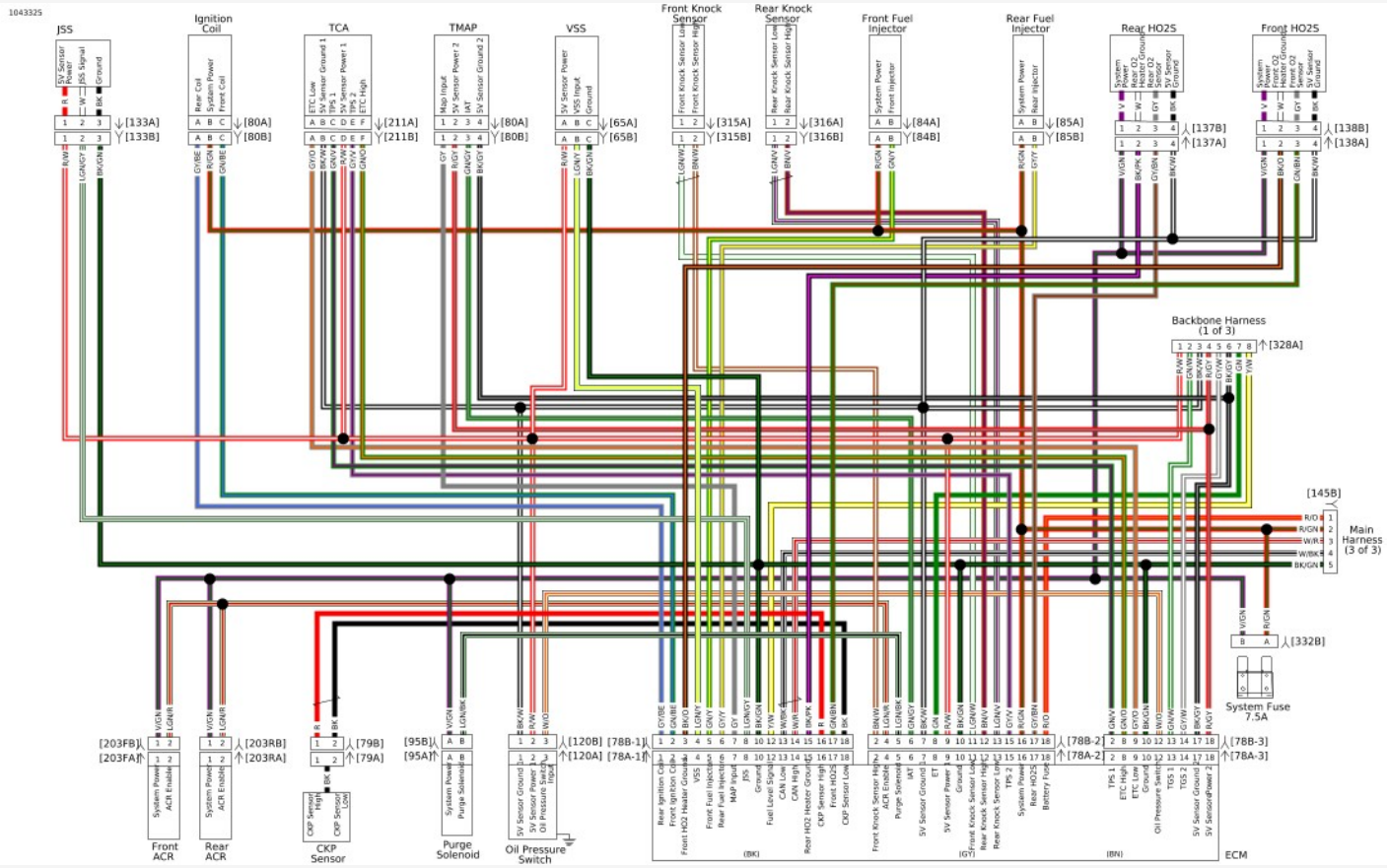

View interactive image

View interactive image

Figure 6. Engine Harness 2 of 3: 2019 Softail

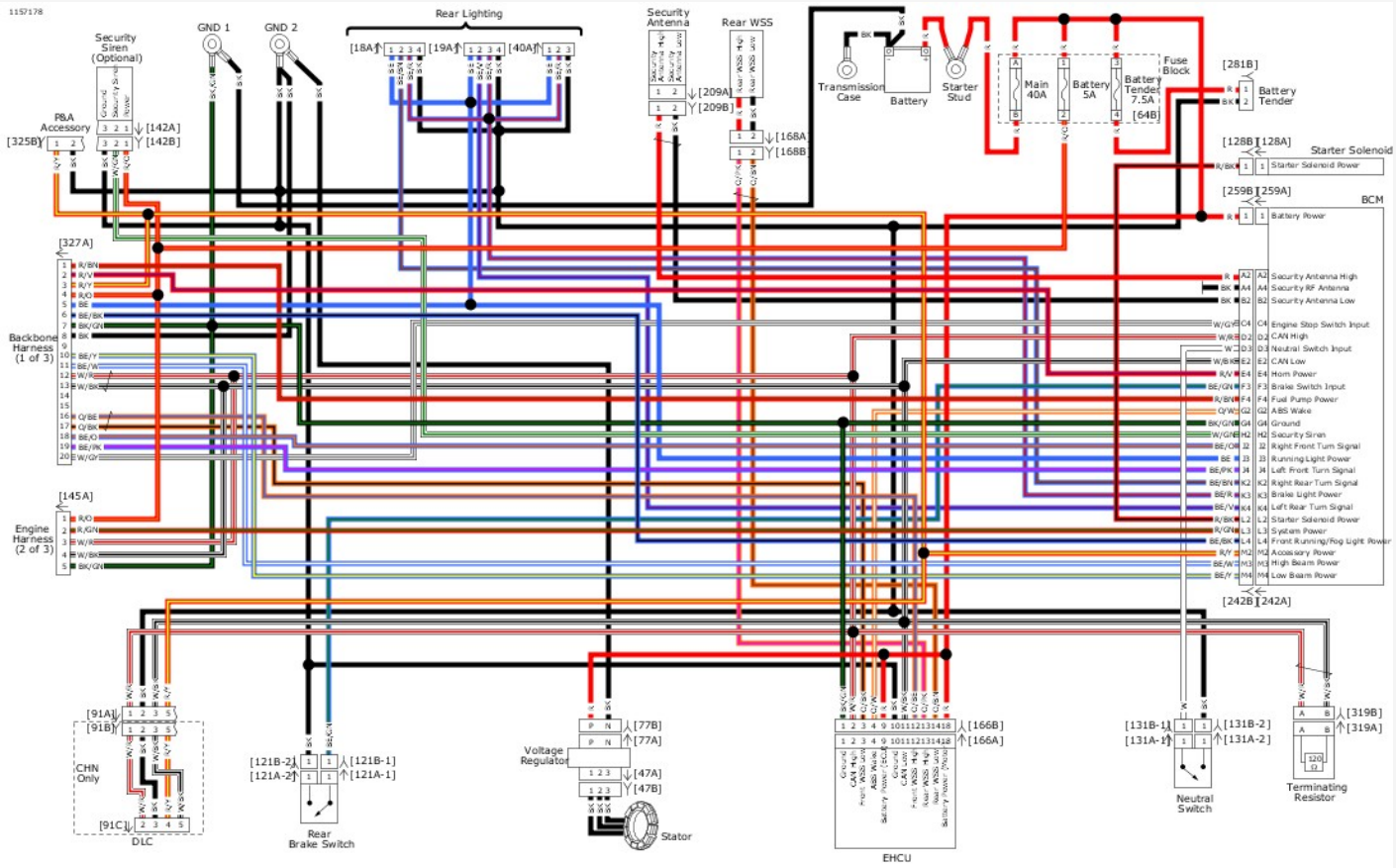

View interactive image

Figure 7. Main Harness 3 of 3: 2019 Softail

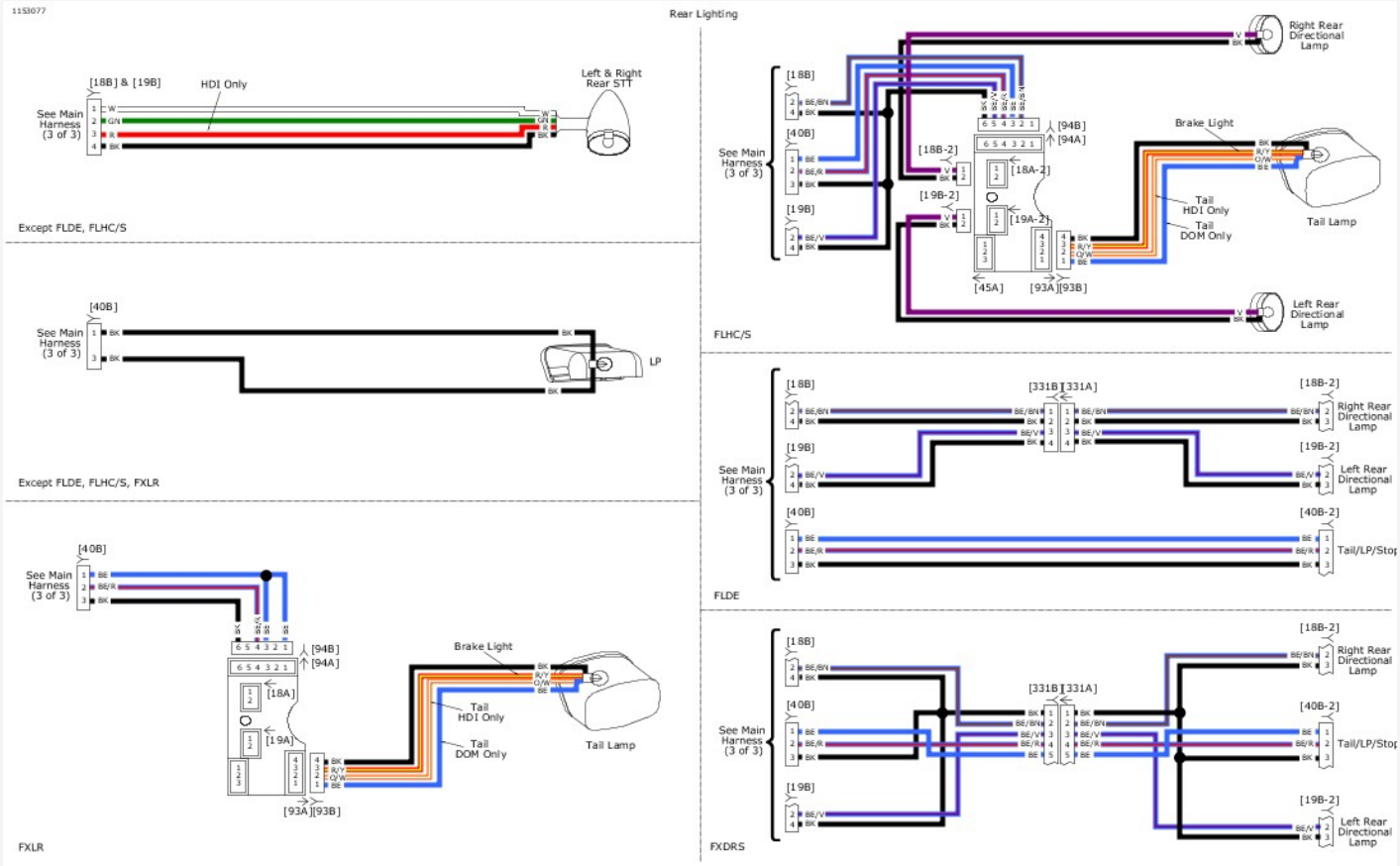

View interactive image

Figure 8. Rear Lighting: 2019 Softail

Function/Location

All vehicle connectors are identified by their function and location. Refer to Table 1.

Place and Color

The place (number of wire cavities of a connector housing) and color of the connector can also aid identification.

Connector Number

On wiring diagrams and in service instructions, connectors are identified by a number in brackets.

Repair Instructions

The repair instructions in Appendix B of the electrical diagnostic manual (EDM) are by connector type. Refer to Table 1.

Table 1. Softail Connector Locations

NO.	DESCRIPTION	TYPE	TERMINAL PROBE COLOR	LOCATION
[18]	Right rear stop, tail and turn assembly	4-place JAE MX19 Sealed (BK)	Yellow	Under seat
[18-2]	Right rear turn	4-place JAE MX19 Sealed (BK)	Yellow	Inside light bar (FLDE) Inside stop lamp (FLHC/S)
[19]	Left rear stop, tail and turn assembly	4-place JAE MX19 Sealed (BK)	Yellow	Under seat
[19-2]	Left rear turn	4-place JAE MX19 Sealed (BK)	Yellow	Inside light bar (FLDE) Inside stop lamp (FLHC/S)
[20]	Console harness	4-way JST JWPF Sealed (BK)	Yellow	Inside frame behind grommet
[22-1]	Right hand controls	4-place JAE MX19 Sealed (BK)	Yellow	Caddy inside left frame behind grommet
[22-2]	Right hand controls	2-place JAE MX19 Sealed (BK)	Yellow	Under frame in front of front cylinder
[24]	Left hand controls	4-place JAE MX19 Sealed (BK)	Yellow	Under frame in front of front cylinder
[31L]	Left front turn signal/auxiliary lamp	4-way JAE MX19 Sealed (GY)	Yellow	Caddy inside left frame behind grommet
[31R]	Right front turn signal/auxiliary lamp	4-way JAE MX19 Sealed (GY)	Yellow	Under frame in front of front cylinder
[31R-2]	Right front turn/auxiliary lamp with light bar	4-way JAE MX19 Sealed (GY)	Yellow	Inside light bar (FLDE)

[31L-2]	Left front turn/auxiliary lamp with light bar	4-way JAE MX19 Sealed (GY)	Yellow	Inside light bar (FLDE)
[38]	Headlamp	4-place Deutsch DTM Sealed (BK) (FXBR/S, FXFR/S)	Brown	Caddy inside left frame behind grommet
[38-2]	Headlamp	4-way Delphi 150 Metri-Pack (BK)	Gray	Inside headlamp nacelle
[39]	IM	12-place Delphi Micro 64 Sealed (GY) (except FXBR/S, FXBB) 6-place JST JWPF Sealed (BK) (FXBR/S, FXBB)	BOB Yellow	IM
[40]	Center rear lighting	3-place Tyco MCON 1.2 Sealed (BK)	Gray	Under seat
[40-2]	Tail lamp	4-place JAE MX19 Sealed (BK)	Yellow	Inside light bar Back of tail lamp (FLDE)
[47]	Voltage regulator to stator	3-place Dekko (BK)	Green	Back of voltage regulator
[64]	Fuse block	Delphi 280 Metri-pack Sealed Delphi 800 Metri-pack Sealed (main fuse)	Purple/Red	Behind left side cover
[65]	VSS	3-place Delphi GT 150 3.5 Sealed (BK)	Gray	Top of transmission under battery
[73L-2]	Left auxiliary lamps	2-place JAE MX19 Unsealed (BK)	Yellow	Inside light bar (FLDE)
[73L]	Left auxiliary lamps	2-way Delphi 280 Metri-Pack	Purple	Inside auxiliary/fog lamps sealed (BK)
[73R-2]	Right auxiliary lamps	2-place JAE MX19 (BK)	Yellow	Inside light bar (FLDE)
[73R]	Right auxiliary lamps	2-way Delphi 280 Metri-Pack	Purple	Inside auxiliary/fog lamps sealed (BK)
[77]	Voltage regulator	2-place Dekko (BK)	Green	Back of voltage regulator
[78-1]	ECM	18-place Tyco GET 64 Sealed (BK)	BOB	Behind left side cover under fuse block caddy
[78-2]	ECM	18-place Tyco GET 64 Sealed (GY)	BOB	Behind left side cover under fuse block caddy
[78-3]	ECM	18-place Tyco GET 64 Sealed (GY)	BOB	Behind left side cover under fuse block caddy
[79]	CKP sensor	2-place Deutsch DTM Sealed (BK)	Brown	Back of voltage regulator bracket
[80]	TMAP	4-place Tyco MCON 1.2 Sealed (BK)	Gray	Top of induction module
[83]	Ignition coil	3-place Delphi GT 150 Sealed (BK)	Gray	Rear of coil
[84]	Front fuel injector	2-place Delphi GT 150 3.5 Sealed	Gray	Beneath fuel tank

		(GY)		
[85]	Rear fuel injector	2-place Delphi GT 150 3.5 Sealed (GY)	Gray	Beneath fuel tank
[90]	ET sensor	2-place Tyco MCON 1.2 Sealed (GY)	Gray	Under frame below fuel tank
[91]	DLC	6-place Deutsch DT Sealed (GY)	Black	Behind left side cover
[93]	Tail lamp	4-way Tyco 070 Multilock Unsealed (BK)	Gray	Circuit board under tail lamp assembly
[94]	Rear fender lights harness in circuit board	6-place Tyco 070 Multilock Unsealed (BK)	Gray	Circuit board under tail lamp assembly (FLHC, FXLR)
[95]	Purge solenoid	2-place Delphi 150 Metri-pack Sealed (BK)	Gray	Under seat in front of rear fender
[108]	Tachometer	12-place Delphi Micro 64 Sealed (GY)	BOB	Behind tachometer
[120]	Oil pressure switch	3-place Delphi GT 150 3.5 (BK)	Gray	Front right crankcase
[121]	Rear stop lamp switch	Tyco Insulated Spade terminal (BK)	Red	Right side of engine behind voltage regulator
[122]	Horn	Flag terminals (BK)	Red	USB caddy under frame in front of front cylinder
[128]	Starter solenoid	Tyco Insulated Spade terminal (W)	Red	Top of starter
[131]	Neutral switch	Right Angle Push On Molded (BK)		Top of transmission
[133]	JSS	3-place Molex MX 150 Sealed (BK)	Gray	Back of voltage regulator bracket
[137]	HO2 sensor (rear)	4-place Molex MX 150 Sealed (BK)	Gray	Under seat in front of battery
[138]	HO2 sensor (front)	4-place Molex MX 150 Sealed (BK)	Gray	Behind voltage regulator
[141]	Fuel pump and sender	4-place Molex MX150 Sealed (BK)	Gray	USB caddy under frame in front of front cylinder
[142]	Security siren (optional)	3-place Delphi GT 150 3.5 Sealed (BK)	Gray	Electrical panel behind fender extension
[145]	Engine harness	5-way Tyco MCON 1.2	Gray	Under seat
[166]	ABS EHCU	18-place Tyco MCON 1.2 Sealed (BK)	BOB	Behind right side cover
[167]	Front WSS	2-place JAEMX19 Sealed (GY)	Yellow	Under frame in front of front cylinder
[168]	Rear WSS	2-place Deutsch DTM Sealed (BK)	Brown	Behind right side cover
[203F]	ACR (front)	2-place Tyco Superseal 1.5 Sealed	Gray	Under frame below fuel tank

[203R]	ACR (rear)	2-place Tyco Superseal 1.5 Sealed	Gray	Under frame below fuel tank
[204]	TGS	6-place JST JWPF Sealed	Yellow	Caddy inside left frame behind grommet
[209]	Security antenna	2-place Molex MX 64 Unsealed (BK)	Light Blue	Under seat
[211]	TCA	6-way Delphi GT 150 Sealed (BK)	Gray	Right side of engine (induction module)
[242]	BCM	48-place Molex CMC Sealed (BK)	BOB	Front of rear wheel behind splash guard
[259]	BCM battery power	1-place Delphi 800 Metri-pack Sealed (BK)	Red	Front of rear wheel behind splash guard
[264]	USB	2-way Deutsch DT (GY)	Black	USB caddy under frame in front of front cylinder
[281]	Battery tender	2-way over mold (BK)		Behind left side cover
[315]	Front knock sensor	2-way Kostal MLK 1.2	Light blue	Under fuel tank
[316]	Rear knock sensor	2-way Kostal MLK 1.2	Light blue	Under fuel tank
[319]	Terminating resistor	2-way Delphi GT 150 (BK)	Gray	Behind left side cover
[325]	P&A accessory	3-way Molex MX150 (BK)	Gray	Behind left side cover
[327]	Backbone harness interconnect	20-way Molex MX150 (BK)	Gray	Under seat
[328]	Engine harness interconnect	8-way JST JWPF Sealed (BK)	Yellow	Under fuel tank behind rear cylinder
[329]	USB caddy interconnect	8-way Molex MX150	Gray	USB caddy under frame in front of front cylinder
[331]	Rear light bar interconnect	4-place JAE MX19 Sealed (BK) 6-place Deutsch DTM Sealed (BK)	Yellow	Inside light bar (FLDE) Left side behind swingarm bracket (FXDRS)
[332]	Fuse holder	2-way Delphi Metri-Pack 280	Gray	Under seat
[GND1] [GND2] [GND2A]	Rear ground stud Front ground stud (Regulator) Front ground stud	Ring terminals		Under seat

Table 1. Right Rear Turn Signal [18]

TERMINAL	WIRE COLOR	CIRCUIT DESCRIPTION
1	-	N/C
2	BE/BN	Right rear turn signal
3	-	N/C
4	BK	Ground

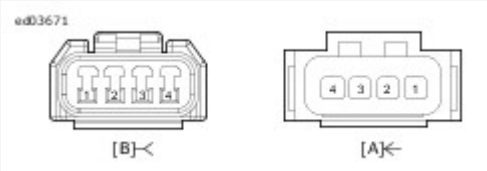

View interactive image

Figure 1. Right Rear Turn Signal [18]

Table 2. Right Rear Turn Signal [18-2]

TERMINAL	WIRE COLOR	CIRCUIT DESCRIPTION
1	-	N/C
2	BE/BN	Right rear turn signal
3	BK	Ground
4	-	N/C

View interactive image

Figure 2. Right Rear Turn Signal [18-2]

Table 3. Left Rear Turn Signal [19]

TERMINAL	WIRE COLOR	CIRCUIT DESCRIPTION
1	-	N/C
2	BE/BN	Left rear turn signal

3	-	N/C
4	BK	Ground

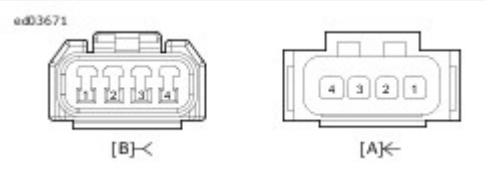

View interactive image

Figure 3. Left Rear Turn Signal [19]

Table 4. Left Rear Turn Signal [19-2]

TERMINAL	WIRE COLOR	CIRCUIT DESCRIPTION
1	-	N/C
2	BE/V	Left rear turn signal
3	BK	Ground
4	-	N/C

View interactive image

Figure 4. Left Rear Turn Signal [19-2]

Table 5. Console Harness [20]

TERMINAL	WIRE COLOR	CIRCUIT DESCRIPTION
1	R/O	Battery fuse
2	BK/GN	Ground
3	W/R	CAN high
4	W/BK	CAN low

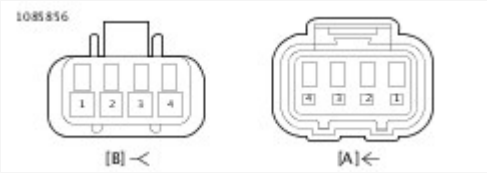

View interactive image

Figure 5. Console Harness [20]

Table 6. RHCM [22-1]

TERMINAL	WIRE COLOR	CIRCUIT DESCRIPTION
1	R/O	Battery fuse
2	BK	Ground
3	W/R	CAN high
4	W/BK	CAN low

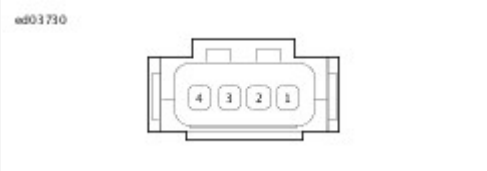

View interactive image

Figure 6. RHCM [22-1]

Table 7. RHCM [22-2]

TERMINAL	WIRE COLOR	CIRCUIT DESCRIPTION
1	W/GY	Engine stop switch
2	-	N/C

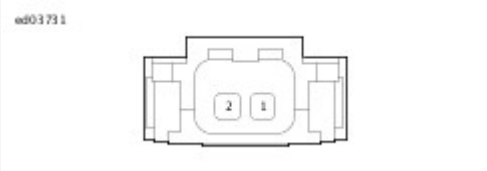

View interactive image

Figure 7. RHCM [22-2]

Table 8. LHCM [24]

TERMINAL	WIRE COLOR	CIRCUIT DESCRIPTION
1	R/O	Battery fuse
2	BK	Ground
3	W/R	CAN high
4	W/BK	CAN low

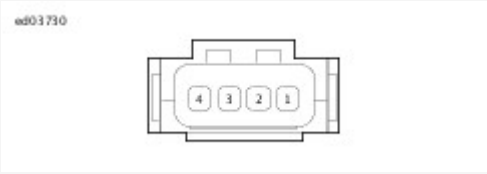

View interactive image

Figure 8. LHCM [24]

Table 9. Front Left Turn Signal [31L]

TERMINAL	WIRE COLOR	CIRCUIT DESCRIPTION
1	BE	Position
2	BE/PK	Left front turn signal
3	BK	Ground
4	BE/BK	AUX/fog

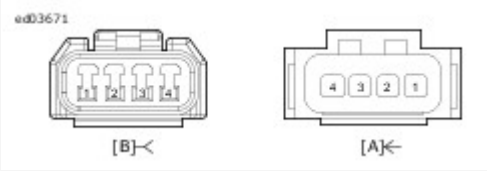

View interactive image

Figure 9. Front Left Turn Signal [31L]

Table 10. Front Left Turn [31L-2]

TERMINAL	WIRE COLOR	CIRCUIT DESCRIPTION
1	BE	Position
2	BE/PK	Left front turn signal
3	BK	Ground

4	-	N/C

View interactive image

Figure 10. Front Left Turn [31L-2]

Table 11. Front Right Turn Signal [31R]

TERMINAL	WIRE COLOR	CIRCUIT DESCRIPTION
1	BE	Position
2	BE/O	Right front turn signal
3	BK	Ground
4	BE/BK	AUX/fog

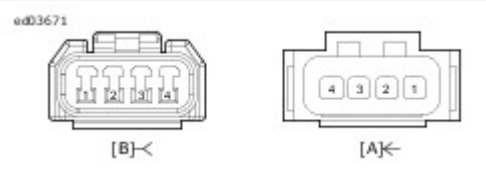

View interactive image

Figure 11. Front Right Turn Signal [31R]

Table 12. Front Right Turn Signal [31R-2]

TERMINAL	WIRE COLOR	CIRCUIT DESCRIPTION
1	BE	Position
2	BE/O	Right front turn signal
3	BK	Ground
4	-	N/C

View interactive image

Figure 12. Front Right Turn Signal [31R-2]

Table 13. Headlamp [38]

TERMINAL	WIRE COLOR	CIRCUIT DESCRIPTION
1	BE	Running/position lamp
2	BE/Y	Low beam
3	BE/W	High beam
4	BK	Ground

View interactive image

Figure 13. Headlamp [38]

Table 14. Headlamp [38-2]

TERMINAL	WIRE COLOR	CIRCUIT DESCRIPTION
A	BK	Ground
B	BE/Y	Low beam
C	BE/W	High beam
D	BE	Running/position lamp

View interactive image

Figure 14. Headlamp [38-2]

Table 15. IM [39] (12 place connector)

TERMINAL	WIRE COLOR	CIRCUIT DESCRIPTION

1	W/O	Oil pressure indicator
2	W/R	CAN high
3	-	N/C
4	BE/W	High beam indicator
5	R/O	Battery fuse
6	W	Neutral indicator
7	BK/GN	Ground
8	W/BK	CAN low
9	-	N/C
10	BE/PK	Left turn indicator
11	W	Indicator type ID
12	BE/O	Right turn indicator

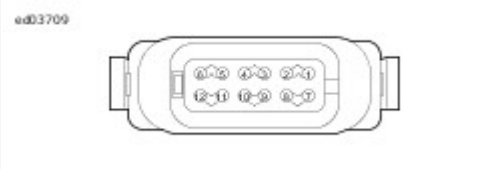

View interactive image

Figure 15. IM [39] (12 place connector)

Table 16. IM [39] (6 place connector)

TERMINAL	WIRE COLOR	CIRCUIT DESCRIPTION
1	R/O	Battery fuse
2	BK/GN	Ground
3	BK	Spare
4	W/R	CAN +
5	W/BK	CAN low
6	BK	H-D link

View interactive image

Figure 16. IM [39] (6 place connector)

Table 17. Center Lighting [40]

TERMINAL	WIRE COLOR	CIRCUIT DESCRIPTION
1	BE	Running/position lamps
2	BE/R	Brake lamp power
3	BK	Ground

View interactive image

Figure 17. Center Lighting [40]

Table 18. Stop Tail Lamp [40-2]

TERMINAL	WIRE COLOR	CIRCUIT DESCRIPTION
1	BE	Position
2	BE/R	Brake lamp power
3	BK	Ground
4	-	N/C

View interactive image

Figure 18. Stop Tail Lamp [40-2]

Table 19. Stator [47]

TERMINAL	WIRE COLOR	CIRCUIT DESCRIPTION
1	BK	Stator
2	BK	Stator
3	BK	Stator

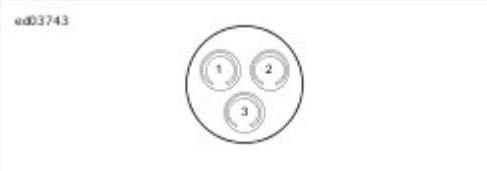

View interactive image

Figure 19. Stator [47]

Table 20. Fuse Block [64]

TERMINAL	WIRE COLOR	CIRCUIT DESCRIPTION
1	R	Battery
2	R/O	Battery fuse
3	R	Battery
4	R	Tender fuse
A	R	Battery/main fuse
B	R	Battery/main fuse

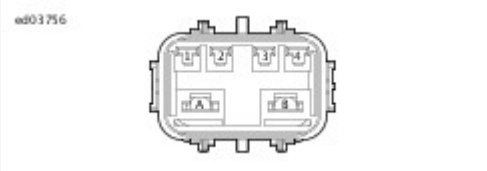

View interactive image

Figure 20. Fuse Block [64]

Table 21. VSS [65]

TERMINAL	WIRE COLOR	CIRCUIT DESCRIPTION
A	R/W	5 Volt sensor power

B	LGN/Y	VSS input
C	BK/GN	Sensor ground

View interactive image

Figure 21. VSS [65]

Table 22. Auxiliary/Fog Lamps [73L]

TERMINAL	WIRE COLOR	CIRCUIT DESCRIPTION
A	BK	Ground
B	GY/BK	Front running/fog light power

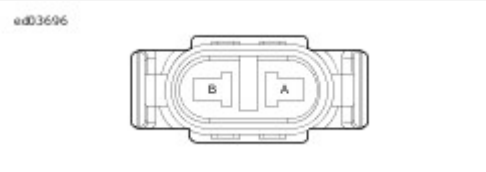

View interactive image

Figure 22. Auxiliary/Fog Lamps [73L]

Table 23. Left Auxiliary/Fog Lamps [73L-2]

TERMINAL	WIRE COLOR	CIRCUIT DESCRIPTION
1	BK	Ground
2	BE/BK	Front running/fog light power

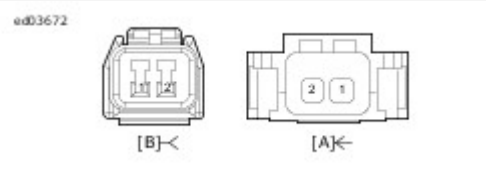

View interactive image

Figure 23. Left Auxiliary/Fog Lamps [73L-2]

Table 24. Auxiliary/Fog Lamps [73R]

TERMINAL	WIRE COLOR	CIRCUIT DESCRIPTION
A	BK	Ground
B	GY/BK	Front running/fog light power

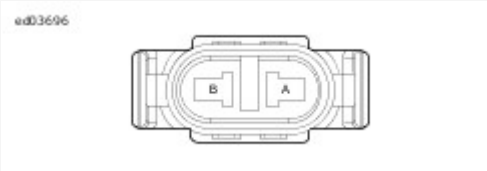

View interactive image

Figure 24. Auxiliary/Fog Lamps [73R]

Table 25. Right Auxiliary/Fog Lamp [73R-2]

TERMINAL	WIRE COLOR	CIRCUIT DESCRIPTION
1	BK	Ground
2	BE/BK	Front running/fog light power

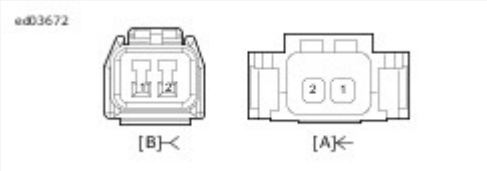

View interactive image

Figure 25. Right Auxiliary/Fog Lamp [73R-2]

Table 26. Voltage Regulator [77]

TERMINAL	WIRE COLOR	CIRCUIT DESCRIPTION
P	R	Battery
N	BK	Ground

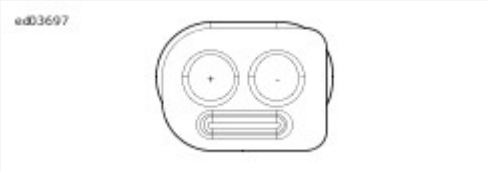

View interactive image

View interactive image

Figure 26. Voltage Regulator [77]

Table 27. ECM [78-1]

TERMINAL	WIRE COLOR	CIRCUIT DESCRIPTION
1	GY/BE	Rear ignition coil
2	GN/BE	Front ignition coil
3	BK/O	Front HO2S heater ground
4	LGN/Y	VSS input
5	GN/Y	Front fuel injector
6	GY/Y	Rear fuel injector
7	GY	MAP input
8	LGN/GY	JSS signal
9	-	N/C
10	BK/GN	Ground
11	-	N/C
12	Y/W	Fuel level
13	W/BK	CAN low
14	W/R	CAN high
15	BK/PK	Rear HO2S heater ground
16	R	CKP sensor high
17	GN/BN	Front HO2S
18	BK	CKP sensor low

View interactive image

Figure 27. ECM [78-1]

Table 28. ECM [78-2]

TERMINAL	WIRE COLOR	CIRCUIT DESCRIPTION
1	-	N/C
2	BN/W	Front knock sensor +
3	-	N/C
4	LGN/R	ACR enable
5	LGN/BK	Purge solenoid
6	GN/GY	IAT
7	BK/W	5 Volt sensor ground
8	GN	ET sensor
9	R/W	5 Volt sensor power
10	BK/GN	Ground
11	LGN/W	Front knock sensor -
12	BN/V	Rear knock sensor +
13	LGN/V	Rear knock sensor -
14	-	N/C
15	GN/V	TPS 2
16	R/GN	System power
17	GY/BN	Rear HO2S
18	R/O	Battery fuse

View interactive image

Figure 28. ECM [78-2]

Table 29. ECM [78-3] (BN)

TERMINAL	WIRE COLOR	CIRCUIT DESCRIPTION
1	-	N/C
2	GN/V	TPS1

3	-	N/C
4	-	N/C
5	-	N/C
6	-	N/C
7	-	N/C
8	GN/O	TCA high
9	GY/O	TCA low
10	BK/GN	Ground
11	-	N/C
12	W/O	Oil pressure
13	GN/W	TGS 1
14	GY/W	TGS 2
15	-	N/C
16	-	N/C
17	BK/GY	5V sensor ground 2
18	R/GY	5V sensor power 2

View interactive image

Figure 29. ECM [78-3]

Table 30. CKP Sensor [79]

TERMINAL	WIRE COLOR	CIRCUIT DESCRIPTION
1	R	CKP sensor high
2	BK	CKP sensor low

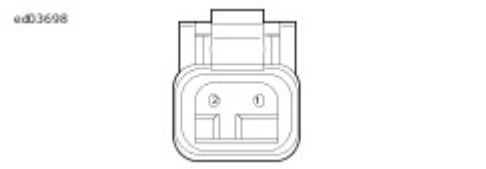

View interactive image

Figure 30. CKP Sensor [79]

Table 31. TMAP [80]

TERMINAL	WIRE COLOR	CIRCUIT DESCRIPTION
1	GY	MAP input
2	R/GY	5V sensor power 2
3	GN/GY	IAT
4	BK/GY	5V sensor ground 2

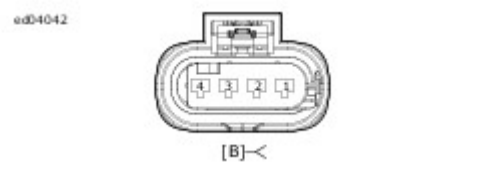

View interactive image

Figure 31. TMAP [80]

Table 32. Ignition Coil [83]

TERMINAL	WIRE COLOR	CIRCUIT DESCRIPTION
A	GY/BE	Rear ignition coil
B	R/GN	System power
C	GN/BE	Front ignition coil

View interactive image

Figure 32. Ignition Coil [83]

Table 33. Front Fuel Injector [84]

TERMINAL	WIRE COLOR	CIRCUIT DESCRIPTION
A	R/GN	System power
B	GN/Y	Rear fuel injector

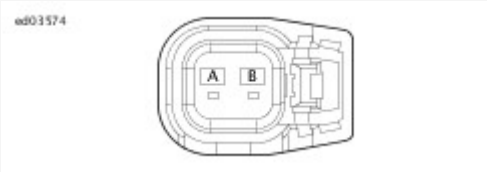

View interactive image

Figure 33. Front Fuel Injector [84]

Table 34. Rear Fuel Injector [85]

TERMINAL	WIRE COLOR	CIRCUIT DESCRIPTION
A	R/GN	System power
B	GY/Y	Front fuel injector

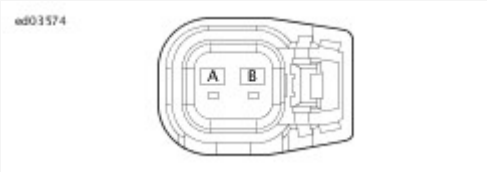

View interactive image

Figure 34. Rear Fuel Injector [85]

Table 35. ET Sensor [90]

TERMINAL	WIRE COLOR	CIRCUIT DESCRIPTION
1	GN	ET sensor
2	BK/W	5V sensor ground

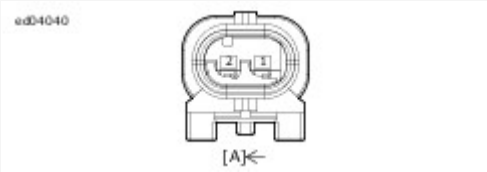

View interactive image

Figure 35. ET Sensor [90]

Table 36. DLC [91]

TERMINAL	WIRE COLOR	CIRCUIT DESCRIPTION
1	W/R	CAN high
2	BK	Ground
3	W/BK	CAN low
4	-	N/C
5	R/Y	Accessory power
6	-	N/C

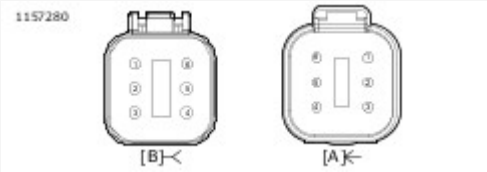

View interactive image

Figure 36. DLC [91]

Table 37. OBD [91C]

TERMINAL	WIRE COLOR	CIRCUIT DESCRIPTION
1	-	N/C
2	W/R	CAN high
3	BK	Ground
4	R/Y	Accessory power
5	W/BK	CAN low
6	-	N/C

View interactive image

Figure 37. OBD [91C]

Table 38. [93]

TERMINAL	WIRE COLOR	CIRCUIT DESCRIPTION
1	BE	Running light power
2	O/W	Accessory power
3	R/Y	Brake lamp power
4	BK	Ground

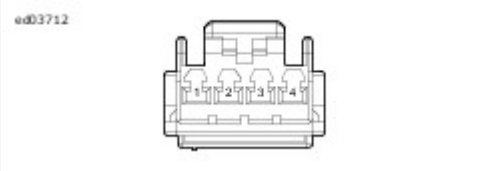

View interactive image

Figure 38. Tail Lamp [93]

Table 39. Stop Tail Lamp [94]

TERMINAL	WIRE COLOR	CIRCUIT DESCRIPTION
1	-	N/C
2	BE/BN	Right rear turn signal
3	BE	Running lights power
4	BE/R	Brake lamp power
5	BE/V	Left rear turn signal
6	BK	Ground

View interactive image

Figure 39. Stop Tail Lamp [94]

Table 40. Purge Solenoid [95]

TERMINAL	WIRE COLOR	CIRCUIT DESCRIPTION
A	R/GN	System power
B	LGN/BK	Purge solenoid

View interactive image

Figure 40. Purge Solenoid [95]

Table 41. Tachometer [108]

TERMINAL	WIRE COLOR	CIRCUIT DESCRIPTION
1	-	N/C
2	W/R	CAN +
3	-	N/C
4	-	N/C
5	R/O	Battery power
6	-	N/C
7	BK/GN	Ground
8	W/BK	CAN -
9	-	N/C
10	-	N/C
11	-	N/C
12	-	N/C

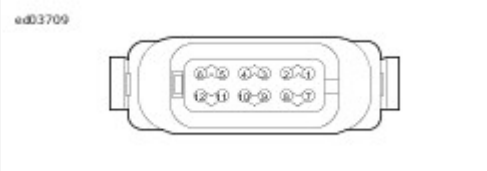

View interactive image

View interactive image

Figure 41. Tachometer [108]

Table 42. Oil Pressure Switch [120]

TERMINAL	WIRE COLOR	CIRCUIT DESCRIPTION
1	BK/W	5V sensor ground
2	R/W	5V sensor power
3	W/O	Oil pressure

View interactive image

Figure 42. Oil Pressure Switch [120]

Table 43. Rear Brake Switch [121-1] [121-2]

TERMINAL	WIRE COLOR	CIRCUIT DESCRIPTION
1	BE/GN	Rear brake switch
1	BK	Ground

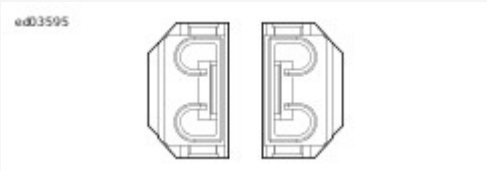

View interactive image

Figure 43. Rear Brake Switch [121-1] [121-2]

Table 44. Horn [122-1] [122-2]

TERMINAL	WIRE COLOR	CIRCUIT DESCRIPTION
1	R/V	Horn power
1	BK	Ground

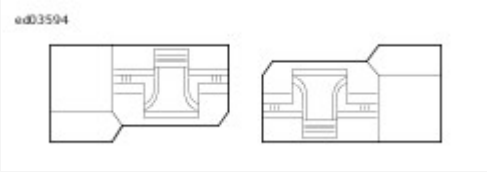

View interactive image

Figure 44. Horn [122-1] [122-2]

Table 45. Starter Solenoid [128]

TERMINAL	WIRE COLOR	CIRCUIT DESCRIPTION
1	R/BK	Starter solenoid power

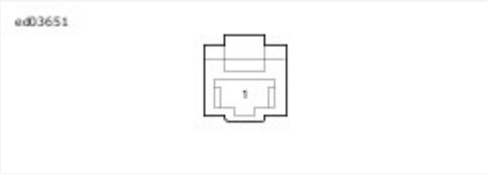

View interactive image

Figure 45. Starter Solenoid [128]

Table 46. Neutral Switch [131-1] [131-2]

TERMINAL	WIRE COLOR	CIRCUIT DESCRIPTION
1	W	Neutral switch input
1	BK	Ground

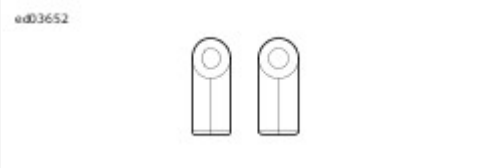

View interactive image

Figure 46. Neutral Switch [131-1] [131-2]

Table 47. Jiffy Stand [133]

TERMINAL	WIRE COLOR	CIRCUIT DESCRIPTION
1	R/W	5 Volt sensor power
2	LGN/GY	JSS signal

3	BK/GN	Sensor ground

View interactive image

Figure 47. Jiffy Stand [133]

Table 48. HO2S Rear [137]

TERMINAL	WIRE COLOR	CIRCUIT DESCRIPTION
1	V/GN	Fuse system power
2	BK/PK	Rear HO2S heater ground
3	GY/BN	Rear HO2S
4	BK/W	5 Volt sensor ground

View interactive image

Figure 48. HO2S Rear [137]

Table 49. HO2S Front [138]

TERMINAL	WIRE COLOR	CIRCUIT DESCRIPTION
1	V/GN	Fuse system power
2	BK/O	Front HO2S heater ground
3	GN/BN	Front HO2S
4	BK/W	5 Volt sensor ground

View interactive image

Figure 49. HO2S Front [138]

Table 50. Fuel Pump [141]

TERMINAL	WIRE COLOR	CIRCUIT DESCRIPTION
1	R/BN	Fuel pump power
2	W/Y	Fuel level sender
3	BK/W	5V sensor ground
4	BK	Ground

View interactive image

Figure 50. Fuel Pump [141]

Table 51. Security Siren (Optional) [142]

TERMINAL	WIRE COLOR	CIRCUIT DESCRIPTION
1	R/O	Power
2	W/GN	Security siren
3	BK	Ground

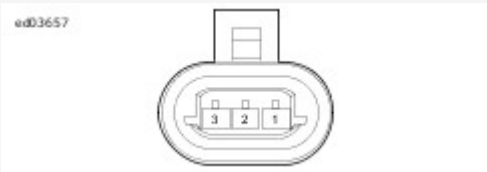

View interactive image

Figure 51. Security Siren (Optional) [142]

Table 52. Engine Harness [145]

TERMINAL	WIRE COLOR	CIRCUIT DESCRIPTION
1	R/O	Battery power
2	R/GN	System power
3	W/R	CAN +
4	W/BK	CAN -
5	BK/GN	Ground

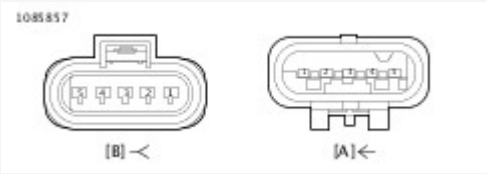

View interactive image

Figure 52. Engine Harness [145]

Table 53. ABS [166]

TERMINAL	WIRE COLOR	CIRCUIT DESCRIPTION
1	BK/GN	Ground
2	W/R	CAN high
3	O/BK	Front WSS low
4	BE/BK	Switched aux lamp PWR
5	-	N/C
6	-	N/C
7	-	N/C
8	-	N/C
9	R	Battery power
10	BK	Ground
11	W/BK	CAN low
12	O/BE	Front WSS high
13	O/PK	Rear WSS high
14	O/BN	Rear WSS low

15	-	N/C
16	-	N/C
17	-	N/C
18	R	Battery power

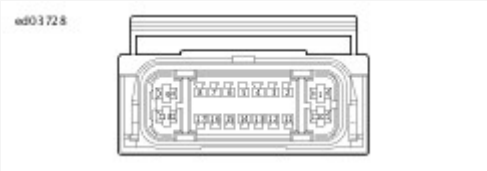

View interactive image

Figure 53. ABS [166]

Table 54. Front WSS [167]

TERMINAL	WIRE COLOR	CIRCUIT DESCRIPTION
1	O/BE	Front WSS high
2	O/BK	Front WSS low

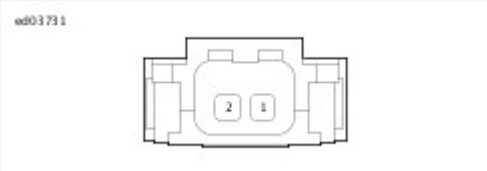

View interactive image

Figure 54. Front WSS [167]

Table 55. Rear WSS [168]

TERMINAL	WIRE COLOR	CIRCUIT DESCRIPTION
1	O/PK	Rear WSS high
2	O/BN	Rear WSS low

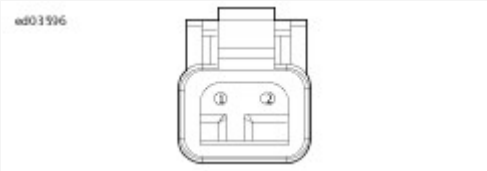

View interactive image

View interactive image

Figure 55. Rear WSS [168]

Table 56. ACR [203]

TERMINAL	WIRE COLOR	CIRCUIT DESCRIPTION
1	R/GN	System power
2	LGN/R	ACR enable

View interactive image

Figure 56. ACR [203]

Table 57. TGS [204A]

TERMINAL	WIRE COLOR	CIRCUIT DESCRIPTION
1	R/W	5V sensor power 1
2	GN/W	TGS 1
3	BK/W	5V sensor ground 1
4	R/GY	5V sensor power 2
5	GY/W	TGS 2
6	BK/GY	5V sensor ground 2

View interactive image

Figure 57. TGS [204]

Table 58. TGS [204B]

TERMINAL	WIRE COLOR	CIRCUIT DESCRIPTION

1	R	5V sensor power 1
2	W	TGS 1
3	BK	5V sensor ground 1
4	R	5V sensor power 2
5	W	TGS 2
6	BK	5V sensor ground 2

View interactive image

Figure 58. TGS [204B]

Table 59. Security Antenna [209]

TERMINAL	WIRE COLOR	CIRCUIT DESCRIPTION
1	R	Security antenna high
2	BK	Security antenna low

View interactive image

Figure 59. Security Antenna [209]

Table 60. TCA [211]

TERMINAL	WIRE COLOR	CIRCUIT DESCRIPTION
A	GY/O	ETC low
B	BK/W	5V sensor ground 1
C	GN/V	TPS 1
D	R/W	5V sensor power 1

E	GY/V	TPS 2
F	GN/O	ETC high

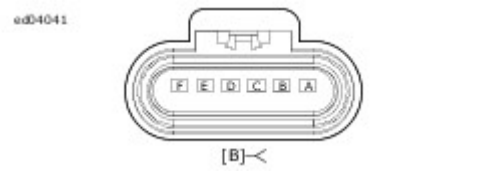

View interactive image

Figure 60. TCA [211]

Table 61. BCM [242]

TERMINAL	WIRE COLOR	CIRCUIT DESCRIPTION
A1	-	N/C
A2	R	Security antenna high
A3	-	N/C
A4	BK	Security RF antenna
B1	-	N/C
B2	BK	Security antenna low
B3	-	N/C
B4	-	N/C
C1	-	N/C
C2	-	N/C
C3	-	N/C
C4	W/GY	Engine stop switch input
D1	-	N/C
D2	W/R	CAN high
D3	W	Neutral switch input
D4	-	N/C
E1	-	N/C
E2	W/BK	CAN low
E3	W/O	Oil pressure switch input

E4	R/V	Horn power
F1	-	N/C
F2	-	N/C
F3	BE/GN	Brake switch input
F4	R/BN	Fuel pump power
G1	-	N/C
G2	O/W	ABS wake
G3	-	N/C
G4	BK/GN	Sensor ground
H1	-	N/C
H2	W/GN	Security siren
H3	-	N/C
H4	-	N/C
J1	-	N/C
J2	BE/O	Right front turn signal
J3	BE	Running lights
J4	BE/PK	Left front turn signal
K1	-	N/C
K2	BE/BN	Right rear turn signal
K3	BE/R	Brake lamp power
K4	BE/V	Left rear turn signal
L1	-	N/C
L2	R/BK	Starter solenoid power
L3	R/GN	System power
L4	BE/BK	Front running/Fog light power
M1	-	N/C
M2	R/Y	Accessory power
M3	BE/W	High beam power
M4	BE/Y	Low beam power

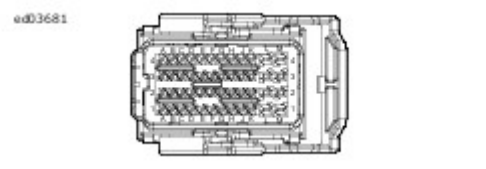

View interactive image

Figure 61. BCM [242]

Table 62. BCM Power [259]

TERMINAL	WIRE COLOR	CIRCUIT DESCRIPTION
1	R	Battery power

View interactive image

Figure 62. BCM Power [259]

Table 63. USB Interconnect [264]

TERMINAL	WIRE COLOR	CIRCUIT DESCRIPTION
1	R/Y	Accessory power
2	BK	Ground

View interactive image

Figure 63. USB Interconnect [264]

Table 64. Battery Tender [281]

TERMINAL	WIRE COLOR	CIRCUIT DESCRIPTION
1	R	Battery power
2	BK	Ground

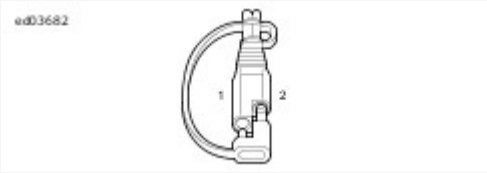

View interactive image

Figure 64. Battery Tender [281]

Table 65. Front Knock Sensor [315]

TERMINAL	WIRE COLOR	CIRCUIT DESCRIPTION
1	LGN/W	Front knock sensor LO
2	BN/W	Front knock sensor HI

View interactive image

Figure 65. Knock Sensor

Table 66. Rear Knock Sensor [316]

TERMINAL	WIRE COLOR	CIRCUIT DESCRIPTION
1	LGN/V	Rear knock sensor LO
2	BN/V	Rear knock sensor HI

View interactive image

Figure 66. Knock Sensor

Table 67. Termination Resister [319]

TERMINAL	WIRE COLOR	CIRCUIT DESCRIPTION

A	W/R	CAN High
B	W/BK	CAN Low

View interactive image

Figure 67. Termination Resister [319]

Table 68. P&A Accessory [325]

TERMINAL	WIRE COLOR	CIRCUIT DESCRIPTION
1	R/Y	Accessory power
2	BK	Ground
3	-	N/C

View interactive image

Figure 68. P&A Accessory [325]

Table 69. Backbone Harness Interconnect [327A]

TERMINAL	WIRE COLOR	CIRCUIT DESCRIPTION
1	R/BN	Fuel pump power
2	R/V	Horn power
3	R/Y	Accessory power
4	R/O	Battery fuse
5	BE	Position lamp
6	BE/BK	AUX/fog lamps
7	BK/GN	Ground

8	BK	Ground
9	-	N/C
10	BE/Y	Low beam
11	BE/W	High beam
12	W/R	CAN +
13	W/BK	CAN -
14	-	N/C
15	-	N/C
16	O/BE	Front WSS +
17	O/BK	Front WSS -
18	BE/O	Front right turn
19	BE/PK	Front left turn
20	W/GY	Run/stop switch

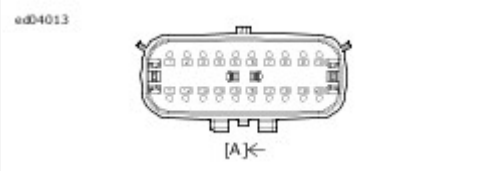

View interactive image

Figure 69. Backbone Harness Interconnect [327A]

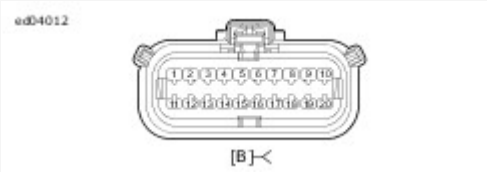

View interactive image

Figure 70. Backbone Harness Interconnect [327B]

Table 70. Engine Harness Interconnect [328]

TERMINAL	WIRE COLOR	CIRCUIT DESCRIPTION
1	R/W	5V sensor power 1
2	GN/W	TGS 1

3	BK/W	5V sensor ground 1
4	R/GY	5V sensor power 2
5	GY/W	TGS 2
6	BK/GY	5V sensor ground 2
7	GN	Engine temperature
8	Y/W	Fuel level

View interactive image

Figure 71. Engine Harness Interconnect [328]

Table 71. USB Caddy Interconnect [329]

TERMINAL	WIRE COLOR	CIRCUIT DESCRIPTION
1	BK	Ground
2	BK/W	5V sensor ground 1
3	GN	Engine temperature
4	R/Y	Accessory power
5	R/V	Horn power
6	BK/W	5V sensor ground 1
7	Y/W	Fuel level
8	R/BN	Fuel pump power

View interactive image

Figure 72. USB Caddy Interconnect [329]

Table 72. Light Bar Interconnect [331] (4 place connector)

TERMINAL	WIRE COLOR	CIRCUIT DESCRIPTION
1	BE/BN	Right rear turn signal
2	BK	Ground
3	BE/V	Left rear turn signal
4	BK	Ground

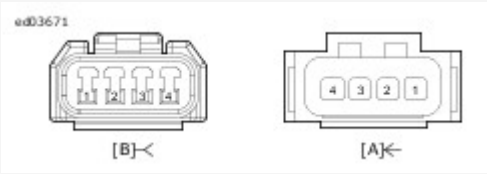

View interactive image

Figure 73. Light Bar Interconnect [331] (4 place connector)

Table 73. Light Bar Interconnect [331] (6 place connector)

TERMINAL	WIRE COLOR	CIRCUIT DESCRIPTION
1	BK	Ground
2	BE/BN	Right rear turn signal
3	BE/V	Left rear turn signal
4	BE/R	Brake light power
5	BE	Running light power

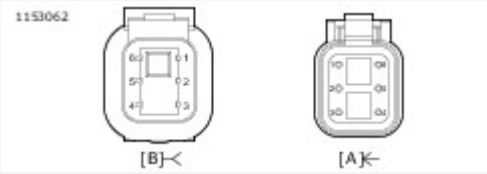

View interactive image

Figure 74. Light Bar Interconnect [331] (6 place connector)

Table 74. Fuse Block [332]

TERMINAL	WIRE COLOR	CIRCUIT DESCRIPTION
A	R/GN	System power
B	V/GN	Fused system power

View interactive image

Figure 75. Fuse Block [332]

Refer to the table below for a list of common acronyms and abbreviations.

Table 1. Acronyms and Abbreviations

ACRONYM OR ABBREVIATION	DESCRIPTION
A	Amperes
AAT	Ambient air temperature
ABS	Anti-lock braking system
AC	Alternating current
ACC	Accessory position on ignition switch
ACR	Automatic compression release
AGM	Absorbed glass mat (battery)
Ah	Ampere-hour
AIS	Active intake solenoid
AWG	American wire gauge
B+	Battery voltage
bar	Bar
BAS	Bank angle sensor
BCM	Body control module
BOB	Breakout box
BTDC	Before top dead center
°C	Celsius (Centigrade)
CA	California
CAL	Calibration
CAN	Controller area network
CB Tx	CB send transmission
CB Rx	CB receive transmission
cc	Cubic centimeters
CCA	Cold cranking amps
CCW	Counterclockwise
CKP	Crankshaft position

cm	Centimeters
cm^3	Cubic centimeters
CW	Clockwise
DC	Direct current
DLC	Data link connector
DOM	Domestic
DOT	Department of Transportation
DTC	Diagnostic trouble code
DVOM	Digital volt ohm meter
ECM	Electronic control module
ECT	Engine coolant temperature
ECU	Electronic control unit
EEPROM	Electrically erasable programmable read only memory
EFI	Electronic fuel injection
EHCU	Electro hydraulic control unit
ET	Engine temperature
ETC	Electronic throttle control
EVAP	Evaporative emissions control system
°F	Fahrenheit
fl oz	Fluid ounce
FPS	Fuel pressure sensor
ft	Feet
ft-lbs	Foot pounds
FTP	Flash to pass
g	Gram
gal	Gallon
GAWR	Gross axle weight rating
GND	Ground (electrical)
GPS	Global positioning system
GVWR	Gross vehicle weight rating

HCU	Hydraulic control unit
HDI	Harley-Davidson International
HD-Link	Networking system
H-DSSS	Harley-Davidson smart security system
HFM	Hands-free mode
HFSM	Hands-free security module
Hg	Mercury
H02S	Heated oxygen sensor
hp	Horsepower
hr	Hour
IAC	Idle air control
IAT	Intake air temperature
IC	Instrument cluster
ID	Inside diameter
IGN	Ignition light/key switch position
IM	Instrument module
in	inch
in^3	Cubic inch
INJ PW	Injector pulse width
INTCM	Intercom
in-lbs	Inch pounds
JSS	Jiffy stand sensor
kg	Kilogram
km	Kilometer
km/h	Kilometers per hour
kPa	Kilopascal
kW	Kilowatt
KS	Knock sensor
L	Liter
lb	Pounds

LCD	Liquid crystal display
LED	Light emitting diode
LH	Left hand
LHCM	Left hand control module
LP	License plate
LT	Left
mA	Milliampere
MAP	Manifold absolute pressure
max	Maximum
mi	Mile
min	Minimum
mL	Milliliter
mm	Millimeter
mph	Miles per hour
ms	Millisecond
Nm	Newton-meter
NIM	Navigation interface module
NiMH	Nickel metal hydride
N/A	Not applicable
O2	Oxygen
OD	Outside diameter
OEM	Original equipment manufacturer
oz	Ounce
P&A	Parts and Accessories
Part No.	Part number
PIN	Personal identification number
PND	Personal navigation device
psi	Pounds per square inch
PWM signal	Pulse width modulated signal
qt	Quart

RAD	Radio
RCM	Reverse control module
RDS	Radio data system
RES	Reserve mark on fuel supply valve
RH	Right hand
RHCM	Right hand control module
rpm	Revolutions per minute
RT	Right
s	Seconds
SCFH	Cubic feet per hour at standard conditions
SDARS	Satellite digital audio radio service
SPDO	Speedometer
SPKR	Speaker
STT	Stop/tail/turn
TA	Traffic announcement
TCA	Throttle control actuator
TDC	Top dead center
TGS	Twist grip sensor
TPMS	Tire pressure monitoring system
TPS	Throttle position sensor
TSM	Turn signal module
TSSM	Turn signal/security module
TT	Telltale
USB	Universal serial bus
V	Volt
VAC	Volts of alternating current
VDC	Volts of direct current
VIN	Vehicle identification number
VR	Voice recognition
VSS	Vehicle speed sensor

W	Watt
WA	Weather alert
WHIM	Wireless headset interface module
WSS	Wheel speed sensor

Table 1. Metric Conversions

MILLIMETERS TO INCHES (MM X 0.03937 = IN)								INCHES TO MILLIMETERS (IN X 25.40 = MM)							
MM	IN	MM	IN	MM	IN	MM	IN	IN	MM	IN	MM	IN	MM	IN	MM
.1	.0039	25	.9842	58	2.283	91	3.582	.001	.025	.6	15.240	1-15/16	49.21	3-5/16	84.14
.2	.0078	26	1.024	59	2.323	92	3.622	.002	.051	5/8	15.875	2	50.80	3-3/8	85.72
.3	.0118	27	1.063	60	2.362	93	3.661	.003	.076	11/16	17.462	2-1/16	52.39	3.4	86.36
.4	.0157	28	1.102	61	2.401	94	3.701	.004	.102	.7	17.780	2.1	53.34	3-7/16	87.31
.5	.0197	29	1.142	62	2.441	95	3.740	.005	.127	3/4	19.050	2-1/8	53.97	3-1/2	88.90
.6	.0236	30	1.181	63	2.480	96	3.779	.006	.152	.8	20.320	2-3/16	55.56	3-9/16	90.49
.7	.0275	31	1.220	64	2.519	97	3.819	.007	.178	13/16	20.638	2.2	55.88	3.6	91.44
.8	.0315	32	1.260	65	2.559	98	3.858	.008	.203	7/8	22.225	2-1/4	57.15	3-5/8	92.07
.9	.0354	33	1.299	66	2.598	99	3.897	.009	.229	.9	22.860	2.3	58.42	3-11/16	93.66
1	.0394	34	1.338	67	2.638	100	3.937	.010	.254	15/16	23.812	2-5/16	58.74	3.7	93.98
2	.0787	35	1.378	68	2.677	101	3.976	1/64	.397	1	25.40	2-3/8	60.32	3-3/4	95.25
3	.1181	36	1.417	69	2.716	102	4.016	.020	.508	1-1/16	26.99	2.4	60.96	3.8	96.52
4	.1575	37	1.456	70	2.756	103	4.055	.030	.762	1.1	27.94	2-7/16	61.91	3-13/16	96.84
5	.1968	38	1.496	71	2.795	104	4.094	1/32	.794	1-1/8	28.57	2-1/2	63.50	3-7/8	98.42
6	.2362	39	1.535	72	2.834	105	4.134	.040	1.016	1-3/16	30.16	2-9/16	65.09	3.9	99.06
7	.2756	40	1.575	73	2.874	106	4.173	.050	1.270	1.2	30.48	2.6	66.04	3-15/16	100.01
8	.3149	41	1.614	74	2.913	107	4.212	.060	1.524	1-1/4	31.75	2-5/8	66.67	4	101.6
9	.3543	42	1.653	75	2.953	108	4.252	1/16	1.588	1.3	33.02	2-11/16	68.26	4-1/16	102.19
10	.3937	43	1.693	76	2.992	109	4.291	.070	1.778	1-5/16	33.34	2.7	68.58	4.1	104.14

11	.4331	44	1.732	77	3.031	110	4.331	.080	2.032	1-3/8	34.92	2-3/4	69.85	4-1/8	104.77
12	.4724	45	1.772	78	3.071	111	4.370	.090	2.286	1.4	35.56	2.8	71.12	4-3/16	106.36
13	.5118	46	1.811	79	3.110	112	4.409	.1	2.540	1-7/16	36.51	2-13/16	71.44	4.2	106.68
14	.5512	47	1.850	80	3.149	113	4.449	1/8	3.175	1-1/2	38.10	2-7/8	73.02	4-1/4	107.95
15	.5905	48	1.890	81	3.189	114	4.488	3/16	4.762	1-9/16	39.69	2.9	73.66	4.3	109.22
16	.6299	49	1.929	82	3.228	115	4.527	.2	5.080	1.6	40.64	2-15/16	74.61	4-5/16	109.54
17	.6693	50	1.968	83	3.268	116	4.567	1/4	6.350	1-5/8	41.27	3	76.20	4-3/8	111.12
18	.7086	51	2.008	84	3.307	117	4.606	.3	7.620	1-11/16	42.86	3-1/16	77.79	4.4	111.76
19	.7480	52	2.047	85	3.346	118	4.645	5/16	7.938	1.7	43.18	3.1	78.74	4-7/16	112.71
20	.7874	53	2.086	86	3.386	119	4.685	3/8	9.525	1-3/4	44.45	3-1/8	79.37	4-1/2	114.30
21	.8268	54	2.126	87	3.425	120	4.724	.4	10.160	1.8	45.72	3-3/16	80.96	4-9/16	115.89
22	.8661	55	2.165	88	3.464	121	4.764	7/16	11.112	1-13/16	46.04	3.2	81.28	4.6	116.84
23	.9055	56	2.205	89	3.504	122	4.803	1/2	12.700	1-7/8	47.62	3-1/4	82.55	4-5/8	117.47
24	.9449	57	2.244	90	3.543	123	4.842	9/16	14.288	1.9	48.26	3.3	83.82	4-11/16	119.06

Unless otherwise specified, all fluid volume measurements in this manual are expressed in United States (U.S.) units-of-measure. See below:

- 1 pint (U.S.) = 16 fluid ounces (U.S.)
- 1 quart (U.S.) = 2 pints (U.S.) = 32 fl. oz. (U.S.)
- 1 gallon (U.S.) = 4 quarts (U.S.) = 128 fl. oz. (U.S.)

Fluid volume measurements in this manual include the metric system equivalents. In the metric system, 1 liter (L) = 1,000 milliliters (mL). To convert between U.S. units-of-measure and metric units-of-measure, refer to the following:

- fluid ounces (U.S.) x 29.574 = milliliters
- pints (U.S.) x 0.473 = liters
- quarts (U.S.) x 0.946 = liters
- gallons (U.S.) x 3.785 = liters
- milliliters x 0.0338 = fluid ounces (U.S.)
- liters x 2.114 = pints (U.S.)
- liters x 1.057 = quarts (U.S.)
- liters x 0.264 = gallons (U.S.)

Fluid volume measurements in this manual do not include the British Imperial (Imp.) system equivalents. The following conversions exist in the British Imperial system:

- 1 pint (Imp.) = 20 fluid ounces (Imp.)
- 1 quart (Imp.) = 2 pints (Imp.)
- 1 gallon (Imp.) = 4 quarts (Imp.)

Although the same unit-of-measure terminology as the U.S. system is used in the British Imperial (Imp.) system, the actual volume of each British Imperial unit-of-measure differs from its U.S. counterpart. The U.S. fluid ounce is larger than the British Imperial fluid ounce. However, the U.S. pint, quart, and gallon are smaller than the British Imperial pint, quart, and gallon, respectively. To convert between U.S. units and British Imperial units, refer to the following:

- fluid ounces (U.S.) x 1.042 = fluid ounces (Imp.)
- pints (U.S.) x 0.833 = pints (Imp.)
- quarts (U.S.) x 0.833 = quarts (Imp.)
- gallons (U.S.) x 0.833 = gallons (Imp.)
- fluid ounces (Imp.) x 0.960 = fluid ounces (U.S.)
- pints (Imp.) x 1.201 = pints (U.S.)
- quarts (Imp.) x 1.201 = quarts (U.S.)
- gallons (Imp.) x 1.201 = gallons (U.S.)

INSIDE BACK COVER GOES HERE

View interactive image

Figure 1.

OUTSIDE BACK COVER GOES HERE

View interactive image

Figure 1.

2019 HARLEY-DAVIDSON® ELECTRICAL DIAGNOSTIC MANUAL: SOFTAIL® MODELS

- Foreword
  - Foreword
    - General
    - How To Use Your Manual
    - Preparation For Service
    - Service Bulletins
    - Use Genuine Replacement Parts
    - Warnings and Cautions
    - Product References
    - Product Registered Marks
    - H-D U.S.A., LLC Trademark Information
    - Contents
- Initial Diagnostics
  - Specifications
    - Specifications
  - Initial Diagnostics
    - Description and Operation
    - Initial Diagnostics
    - Diagnostics
    - Retrieving Trouble Codes
    - Odometer Self-Diagnostics
    - Code Types
    - Multiple Trouble Codes
    - Clearing DTCs
    - Security Lamp
    - Check Engine Lamp
    - Symptoms
  - DIAGNOSTIC TOOLS
    - How To Use Diagnostic Tools
  - DIAGNOSTICS AND TROUBLESHOOTING
    - Voltage Drop
    - Wiggle Test
- Serial Data
  - CAN COMMUNICATION
    - Description and Operation
    - Components
    - Communication DTCs and Error Messages
  - Odometer Self-Diagnostic Inoperative: DTC U0001, U0011, B2274
    - Description and Operation
    - Odometer Self-Diagnostic Inoperative: DTC U0001, U0011, B2274
  - NO VEHICLE POWER OR LOST COMMUNICATION DTCS
    - Description and Operation
    - DTC U0100
    - DTC U0121
    - No Vehicle Power: DTC U0140
    - Left Hand Controls Inoperative: DTC U0141
    - DTC U0142
    - IM Inoperative: DTC U0156
    - Tachometer Inoperative: DTC U0157
    - DTC U0300
- Starting and Charging
  - BATTERY TESTING
    - General

        - Voltmeter Test
        - Battery Diagnostic Test
        - Load Test
    - STARTING SYSTEM
        - Description and Operation
        - Components
        - Starter Troubleshooting
        - Starter Testing
        - Nothing Clicks
        - Starter Solenoid Clicks
        - Starter Spins But Does Not Engage
        - Starter Stalls or Spins Too Slowly
    - STARTER OUTPUT DTCS
        - Description and Operation
        - DTC B2121
        - DTC B2122
        - DTC B2123
        - DTC B2124
    - TESTING STARTER ON MOTORCYCLE
        - Starter Current Draw Test
    - TESTING STARTER ON BENCH
        - Free Running Current Draw Test
    - CHARGING SYSTEM
        - Description and Operation
        - Troubleshooting
        - Low or No Charging
        - Overcharging
        - Low Battery After Extended IGN OFF
        - Battery Runs Down During Use
        - Battery Charging Tests
    - ABS VOLTAGE DIAGNOSTICS
        - Description and Operation
        - Diagnostics
        - DTC C0562
        - DTC C0563
    - BATTERY AND SYSTEM VOLTAGE DIAGNOSTICS
        - Description and Operation
        - DTC P0562
    - ENGINE STOP SWITCH DTCS
        - Description and Operation
        - DTC B2206
        - DTC B2208
    - BCM VOLTAGE DTCS
        - Description and Operation
        - DTC B2271
        - DTC B2272
- Instruments
    - Instruments
        - Description and Operation
        - IM Theory of Operation
        - Instrument Diagnostics
    - FUEL LEVEL DIAGNOSTICS
        - Description and Operation
        - DTC P0462
        - DTC P0463
    - Trip Odometer Functions Inoperative, DTC B2255
        - Description and Operation
        - Trip Odometer Functions Inoperative: DTC B2255

- NO INSTRUMENT POWER DIAGNOSTICS
  - Description and Operation
  - No Instrument Power
  - DTC B1200, B1201
- INDICATOR LAMPS
  - Description and Operation
  - DTC B1214, B1215, B1216
  - Oil Pressure Lamp Always On, DTC P0522
  - DTC P0523
  - Neutral Lamp Always On
  - Neutral Lamp Inoperative
  - High Beam Indicator Always On
  - High Beam Indicator Inoperative
  - Low Fuel Lamp Inoperative
  - Turn Signal Indicator Inoperative
  - Turn Signal Indicator Always On
- Accessories, Horn, Lighting and Security
  - ACC CIRCUIT DIAGNOSTICS
    - Description and Operation
    - DTC B2112
    - DTC B2113, B2114
  - HORN DIAGNOSTICS
    - Description and Operation
    - DTC B2127
    - DTC B2128, B2129
    - Horn Inoperative
  - Cruise Control
    - Description and Operation
    - System Operation
    - Troubleshooting
    - Cruise Control Inoperative Conditions
    - Cruise Control
    - DTC P0577
  - Turn Signals
    - Description and Operation
    - Will Not Cancel Upon Turn Completion, No DTCs
  - FRONT TURN SIGNAL DIAGNOSTICS
    - Description and Operation
    - DTC B2141
    - DTC B2143, B2144
    - DTC B2146
    - DTC B2148, B2149
  - REAR TURN SIGNAL DIAGNOSTICS
    - Description and Operation
    - DTC B2151
    - DTC B2153, B2154
    - DTC B2156
    - DTC B2158, B2159
  - HEADLAMP DIAGNOSTICS
    - Description and Operation
    - Auxiliary Lamps Inoperative: Except Japan
    - DTC B2106, B2107
    - Auxiliary Lamps Inoperative: Japan
    - DTC B2108, B2109
    - DTC B2132
    - DTC B2133, B2134
    - High Beam Headlamp Inoperative, DTC B2131
    - DTC B2137

    - DTC B2138, B2139
    - Low Beam Headlamp Inoperative, DTC B2136
- STOP LAMP DIAGNOSTICS
    - Description and Operation
    - Stop Lamp Always On: DTC B2223
    - DTC B2161
    - DTC B2163, B2164
- SWITCH DIAGNOSTICS
    - Description and Operation
    - DTC B1103, B1153
    - DTC B2210, B2212, B2250, B2251, B2253, B2254, B2260, B2261, B2262, B2263
    - DTC B2259
    - DTC B2270
    - Any Hand Control Switch Inoperative
- BRAKE SWITCH DIAGNOSTICS
    - Description and Operation
    - DTC P0572
- RUNNING LAMP DIAGNOSTICS
    - Description and Operation
    - Front Running Lamps Inoperative
    - Rear Running Lamps Inoperative
    - License Plate Lamp Inoperative
    - DTC B2168, B2169
- SECURITY SYSTEM
    - Security Lamp
    - Security Immobilization
    - Security System Features
    - Security System Warnings
    - Arming
    - Disarming
    - Alarm
- KEY FOB
    - Description and Operation
    - Fob Assignment
- SIREN
    - Description and Operation
    - Siren Chirp Mode Confirmation
- SERVICE AND EMERGENCY FUNCTIONS AND CONFIGURATIONS
    - General
    - Actuation
    - Selecting a PIN
    - Initial PIN Entry
    - Changing the PIN
    - Transport Mode
    - Service Mode
    - Four-Way Flasher
- ALARM DIAGNOSTICS
    - Description and Operation
    - DTC B2172
    - DTC B2173
- SECURITY ANTENNA DIAGNOSTICS
    - Description and Operation
    - DTC B2176
    - DTC B2177
    - DTC B2178
    - Fails to Disarm
- DTC B2183, B2188, B2193, B2198
    - Description and Operation

        - DTC B2183
        - DTC B2188, B2193, B2198
    - NEUTRAL SWITCH DIAGNOSTICS
        - Description and Operation
        - DTC B2218
- Engine Management
    - EFI SYSTEM
        - General
    - Electronic Control Module
        - General
    - SENSORS AND DRIVERS
        - Description and Operation
        - Sensors
        - Drivers
    - SYSTEM POWER CIRCUIT DIAGNOSTICS
        - Description and Operation
        - DTC B2102
        - DTC B2103, B2104
    - FUEL PUMP DIAGNOSTICS
        - Description and Operation
        - DTC B2116
        - DTC B2117
        - DTC B2118, B2119
    - TMAP SENSOR DIAGNOSTICS
        - Description and Operation
        - DTC P0107
        - DTC P0108
        - DTC P0112
        - DTC P0113
    - TCA DIAGNOSTICS
        - Description and Operation
        - DTC P0120
        - DTC P0122
        - DTC P0123
        - DTC P0220
        - DTC P0222
        - DTC P0223
    - ET SENSOR DIAGNOSTICS
        - Description and Operation
        - DTC P0117
        - DTC P0118
    - HO2S DIAGNOSTICS
        - Description and Operation
        - DTC P0031
        - DTC P0032
        - DTC P0051
        - DTC P0052
        - DTC P0131
        - DTC P0132
        - DTC P0134
        - DTC P0151
        - DTC P0152
        - DTC P0154
    - FUEL INJECTOR DIAGNOSTICS
        - Description and Operation
        - DTC P0261
        - DTC P0262
        - DTC P0264

    - DTC P0265
- CKP SENSOR DIAGNOSTICS
    - Description and Operation
    - DTC P0371, P0374
- KNOCK SENSOR DIAGNOSTICS
    - Description and Operation
    - DTC P0325
    - DTC P0327, P0328
    - DTC P0330
    - DTC P0332, P0333
- PURGE SOLENOID DIAGNOSTICS
    - Description and Operation
    - DTC P0444
    - DTC P0445
- VSS DIAGNOSTICS
    - Description and Operation
    - DTC P0502
    - DTC P0503
- IDLE SPEED CONTROL DIAGNOSTICS
    - Loss of Idle Speed Control
    - DTC P0505
- 5V REFERENCE DIAGNOSTICS
    - Description and Operation
    - DTC P0641
    - DTC P0651
- ECM INTERNAL DIAGNOSTICS
    - Description and Operation
- DTC P1270
    - Description and Operation
    - DTC P1270
- DTC P1009
    - General
    - DTC P1009
- JSS DIAGNOSTICS
    - Description and Operation
    - DTC P1501
    - DTC P1502
    - Side Stand Displayed on Speedometer
- ETC MANAGEMENT DIAGNOSTICS
    - Description and Operation
    - DTC P1510, P1511, P1512
- ETC ERROR DIAGNOSTICS
    - Description and Operation
    - DTC P1514
    - DTC P1600
- ACR Diagnostics
    - Description and Operation
    - DTC P1655
    - DTC P1656
- ENGINE PERFORMANCE DIAGNOSTICS
    - Description and Operation
    - DTC P1505
    - Hesitation or Loss of Power Test
    - Starts Hard or Emits Black Smoke
- ETC ACTUATOR DIAGNOSTICS
    - Description and Operation
    - DTC P2100
    - DTC P2101

        - DTC P2102
        - DTC P2103
    - DTC P2105, P2107
        - Description and Operation
        - DTC P2105, P2107
    - STARTS, THEN STALLS
        - Description and Operation
        - STARTS, THEN STALLS
    - IGN COIL DRIVER DIAGNOSTICS
        - Description and Operation
        - DTC P2300
        - DTC P2301
        - DTC P2303
        - DTC P2304
    - DTC P2119
        - Description and Operation
        - DTC P2119
    - Engine Cranks But Will Not Start
        - Description and Operation
        - Engine Cranks But Will Not Start
    - Misfire at Idle or Under Load
        - Description and Operation
        - Inline Spark Tester
        - Misfire at Idle or Under Load
    - TGS DIAGNOSTICS
        - Description and Operation
        - DTC P2122
        - DTC P2123
        - DTC P2127
        - DTC P2128
    - DTC P2176
        - Description and Operation
        - DTC P2176
    - CORRELATION ERROR DIAGNOSTICS
        - Description and Operation
        - DTC P2135
        - DTC P2138
    - Erratic Idle
        - Description and Operation
        - Erratic Idle
    - HESITATION OR LOSS OF POWER
        - Description and Operation
        - DTC P1505
        - Hesitation or Loss of Power Test
- ABS
    - ANTI-LOCK BRAKE SYSTEM (ABS) GENERAL INFORMATION
        - Description and Operation
    - INTERNAL FAULT DIAGNOSTICS
        - Description and Operation
        - DTC C1014, C1040, C1055, C1061, C1062, C1065, C1066
    - WSS DIAGNOSTICS
        - Description and Operation
        - DTC C1021, C1023, C1025, C1027, C1029
        - DTC C1032
        - DTC C1034
    - INVALID VIN DIAGNOSTICS
        - Description and Operation
        - DTC C1159, C1178, C1184

- ABS INDICATOR ALWAYS ON, FLASHING OR INOPERATIVE
  - Description and Operation
  - ABS Indicator Continuously Flashing, No DTCs
  - ABS Indicator Always On or Inoperative
- Wiring
  - Wiring Diagrams
    - General
    - Wiring Diagrams
  - Wire Harness Connectors
    - General
    - Connector End Views
    - Connector Locations
- Connector Repair
  - BOSCH COMPACT 1.1M SEALED CONNECTORS
    - Repair
  - DELPHI GT SEALED CONNECTORS
    - Repair
  - DELPHI METRI-PACK SEALED CONNECTORS
    - Repair
  - DELPHI MICRO 64 SEALED CONNECTORS
    - Repair
  - DEUTSCH DT AND DTM SEALED CONNECTORS
    - Repair
  - JAE MX19 SEALED CONNECTOR
    - Repair
  - JST JWPF SEALED CONNECTORS
    - Repair
  - Kostal MLK 1.2 Sealed Connector
    - Repair
  - MOLEX CMC SEALED CONNECTOR
    - Repair
  - MOLEX MX SEALED CONNECTORS
    - Repair
  - SEALED SPLICE CONNECTORS
    - Repair
  - TYCO GET 64 SEALED CONNECTORS
    - Repair
  - TYCO MCON SEALED CONNECTORS
    - Repair
  - TYCO MCP SEALED CONNECTORS
    - Repair
  - TYCO MULTILOCK UNSEALED CONNECTOR
    - Repair
  - TYCO SUPERSEAL 1.5 SEALED CONNECTORS
    - Repair
- Reference
  - GLOSSARY
    - Acronyms and Abbreviations
  - METRIC CONVERSION
    - Conversion Table
  - FLUID CONVERSIONS
    - United States System
    - Metric System
    - British Imperial System
  - TORQUE CONVERSION
    - United States System
    - Metric System

WARNING

The rider's safety depends upon proper motorcycle service and maintenance. If a procedure in this manual is not within your capabilities or you do not have the correct tools, have a Harley-Davidson dealer perform the procedure. Improper service or maintenance could result in death or serious injury. (00627b)

This electrical diagnostic manual has been prepared with two purposes in mind. First, it will acquaint the user with the construction of the Harley-Davidson product and assist in the performance of repair. Secondly, it will introduce to the professional Harley-Davidson Technician the latest field-tested and factory-approved diagnostic methods. We sincerely believe that this manual will make your association with Harley-Davidson products more pleasant and profitable.

Refer to the table below for the content layout of this manual.

Generated list of chapters
Use the TABLE OF CONTENTS (which follows this FOREWORD) and the INDEX (at the back of this manual) to quickly locate subjects. Chapters and topics in this manual are sequentially numbered for easy navigation.

For example, a cross-reference shown as **2.2 SPECIFICATIONS** refers to chapter 2 CHASSIS, heading 2.2 SPECIFICATIONS.

For quick and easy reference, all pages contain a chapter number followed by a page number. For example, **page 3-5** refers to page 5 in Chapter 3.

A number of acronyms and abbreviations are used in this document. See the **Reference → GLOSSARY** for a list of acronyms, abbreviations and definitions.

Special Tools

Description	Part Number	Qty.
DIGITAL TECHNICIAN II	HD-48650	1

WARNING

Stop the engine when refueling or servicing the fuel system. Do not smoke or allow open flame or sparks near gasoline. Gasoline is extremely flammable and highly explosive, which could result in death or serious injury. (00002a)

Good preparation is very important for efficient service work. Start each job with a clean work area. This will allow the repair to proceed as smoothly as possible. It will also reduce the incidence of misplaced tools and parts.

Clean a motorcycle that is excessively dirty before work starts. Cleaning will occasionally uncover sources of trouble. Gather any tools, instruments and any parts needed for the job before work begins. Interrupting a job to locate tools or parts is a distraction and causes needless delay.

NOTE

- To avoid unnecessary disassembly, carefully read all related service information before repair work begins.
- In figure legends, the number which follows the name of a part indicates the quantity necessary for one complete assembly.
- When servicing a vehicle equipped with the Harley-Davidson Smart Security System (H-DSSS), first disarm the system. Keep the fob close to the vehicle or use **DIGITAL TECHNICIAN II (Part Number:HD-48650)** to disable the system. Activate the system after service is completed.

In addition to the information presented in this manual, Harley-Davidson Motor Company will periodically issue service bulletins to Harley-Davidson dealers. Service bulletins cover interim engineering changes and supplementary information. Consult the service bulletins to keep your product knowledge current and complete.

WARNING

Harley-Davidson parts and accessories are designed for Harley-Davidson motorcycles. Using non-Harley-Davidson parts or accessories can adversely affect performance, stability or handling, which could result in death or serious injury. (00001b)

To achieve satisfactory and lasting repairs, carefully follow the service manual instructions and use only genuine Harley-Davidson replacement parts. Behind the emblem bearing the words GENUINE HARLEY-DAVIDSON stand more than 100 years of design, research, manufacturing, testing and inspecting experience. This is your assurance that the parts you are using will fit right, operate properly and last longer.

Statements in this manual preceded by the following words are of special significance.

WARNING

WARNING indicates a potentially hazardous situation which, if not avoided, could result in death or serious injury. (00119a)

CAUTION

CAUTION indicates a potentially hazardous situation which, if not avoided, may result in minor or moderate injury. (00139a)

NOTICE

NOTICE indicates a potentially hazardous situation which, if not avoided, may result in property damage. (00140b)

NOTE

Refers to important information. It is recommended that you take special notice of these items.

Proper service and repair are important for the safe, reliable operation of all mechanical products. The service procedures recommended and described in this manual are effective methods for performing service operations.

WARNING

Always wear proper eye protection when using hammers, arbor or hydraulic presses, gear pullers, spring compressors, slide hammers and similar tools. Flying parts could result in death or serious injury. (00496b)

Some of these service operations require the use of tools specially designed for the purpose. These special tools should be used when and as recommended. It is important to note that some warnings against the use of specific service methods, which could damage the motorcycle or render it unsafe, are stated in this manual. However, remember that these warnings are not all-inclusive. Inadequate safety precautions could result in death or serious injury.

Since Harley-Davidson could not possibly know, evaluate or advise the service trade of all possible ways in which service might be performed, or of the possible hazardous consequences of each method, we have not undertaken any such broad evaluation. Accordingly, anyone who uses a service procedure or tool which is not recommended by Harley-Davidson must first thoroughly satisfy himself that neither his nor the operator's safety will be jeopardized as a result. Failure to do so could result in death or serious injury.

WARNING

Read and follow warnings and directions on all products. Failure to follow warnings and directions can result in death or serious injury. (00470b)

When reference is made in this manual to a specific brand name product, tool or instrument, an equivalent product, tool or instrument may be substituted.

Special Tools

All tools mentioned in this manual with a part number beginning with "HD", "J" or "B" must be ordered through your local Harley-Davidson dealer. Special tools may only be purchased, serviced or warrantied through a Harley-Davidson dealer.

Specific use of special tools is not discussed in this manual. Refer to the tool instruction sheet for instructions. If the tool instructions are misplaced, a copy can be obtained online at H-Dnet.com > My Toolbox > Edit > Bosch Tool Site.

LOCTITE Sealing and Threadlocking Products

Some procedures in this manual call for the use of LOCTITE products. If you have any questions regarding LOCTITE product usage or retailer/wholesaler locations, contact Loctite Corp. at www.loctite.com.

Apple, Alcantara S.p.A., Allen, Amp Multilock, Bluetooth, Brembo, CarPlay, City Navigator, Delphi, Deutsch, Dunlop, Dynojet, Fluke, G.E. Versilube, Garmin, Gunk, Hydroseal, Hylomar, iPhone, iPod, Kevlar, Lexan, Loctite, Lubriplate, Keps, K&N, Magnaflux, Marson Thread-Setter Tool Kit, MAXI fuse, Molex, Michelin, MPZ, Mulitilock, nano, NGK, Novus, Packard, Pirelli, Permatex, Philips, PJ1, Pozidriv, Road Tech, Robinair, S100, Sems, Siri, SiriusXM, Snap-on, Teflon, Threadlocker, Torca, Torco, TORX, Tufoil, Tyco, Ultratorch, Velcro, X-Acto and XM Satellite Radio are among the trademarks of their respective owners.

Bar & Shield, Boom!, Cross Bones, Cruise Drive, CVO, Digital Tech, Digital Technician, Digital Technician II, Dyna, Electra Glide, Evolution, Fat Bob, Fat Boy, Forty-Eight, Glaze, Gloss, H-D, H-Dnet.com, Harley, Harley-Davidson, HD, Heritage Softail, Iron 883, Low Rider, Milwaukee-eight, Night Rod, Nightster, Night Train, Profile, Reflex, Revolution, Road Glide, Road King, Road Tech, Rocker, Screamin' Eagle, Seventy-Two, Softail, Sportster, Street Glide, Street Rod, Sun Ray, Sunwash, Super Glide, SuperLow, Supersmart, Switchback, SYN3, TechLink, TechLink II, Tour-Pak, Tri Glide, Twin Cam 88, Twin Cam 88B, Twin Cam 96, Twin Cam 96B, Twin Cam 103, Twin Cam 103B, Twin Cam 110, Twin Cam 110B, Twin-Cooled, Ultra Classic, V-Rod, VRSC and Harley-Davidson Genuine Motor Parts and Genuine Motor Accessories are among the trademarks of H-D U.S.A., LLC.

All photographs, illustrations and procedures may not necessarily depict the most current model or component, but are based on the latest production information available at the time of publication.

Since product improvement is our continual goal, Harley-Davidson reserves the right to change specifications, equipment or designs at any time without notice and without incurring obligation.

Table 1. Fuel System Specifications

FUEL SYSTEM	TYPE
Recommended fuel	91 Octane

Table 2. Fuel Pump Pressure Specifications

RANGE	VALUE
Normal	376–425 kPa (54–62 psi)

Table 3. Idle Speed Specifications

ADJUSTMENT	RPM
Normal idle speed	850 Nominal, non-adjustable

Table 4. Battery Specifications

BATTERY	SPECIFICATIONS
Size	12 V/ 17.5 Ah/315 CCA
Type	Sealed, **AGM** (Absorbed glass mat) battery

Table 5. Spark Plug Specifications

SPARK PLUG	SPECIFICATIONS	
Gap	.031-.035 in.	.80-.90 mm

Table 6. Spark Plug Cables

LOCATION	LENGTH	RESISTANCE
Left front and rear	187–194 mm (7.36–7.64 in)	1,840–5,085 Ω
Right front and rear	381–387 mm (15.00–15.24 in)	3,750–10,070 Ω

Table 7. Ignition Coil Specifications

WINDING	RESISTANCE
Primary resistance	0.2–0.5 Ω
Secondary resistance	5,500–8,000 Ω

Table 8. Starter Specifications

STARTER	SPECIFICATIONS
Cranking current	250 A maximum
Free current	90 A maximum

Table 9. Alternator Specifications

ALTERNATOR	VALUE
Three phase	42 A system
AC voltage output	16-28 VAC per 1,000 rpm
Stator coil resistance	0.1–0.3 Ω

Table 10. Regulator Specifications

REGULATOR	VALUE
Amperes @ 3,600 rpm	40–44 A
Voltage @ 3,600 rpm	14.1–14.5 V @ 24 °C (75.2 °F)

Table 11. Fuse Specifications

ITEM	RATING
Main	40 A
Battery	5 A
Battery tender	7.5 A
System	7.5 A

Use initial diagnostics as a starting point to efficiently troubleshoot concerns. A basic understanding of electronics and a general knowledge of the vehicle are necessary to effectively use this manual.

NOTE

Certain diagnostic procedures require part removal. See the service manual for details.

Before diagnosing a concern, perform a general functional test of the vehicle to verify the concern. This will also identify any other issues that may affect diagnostics. Use the procedures in this chapter for initial diagnostics.

NOTE

When working through a diagnostic procedure follow the steps in the order instructed. Never jump to a test in another procedure. All "Go to test" statements refer to a test in that procedure.

NOTE

Always inspect connectors for backed out terminals, improper mating, inoperative locks, improperly formed or damaged terminals, poor terminal-to-wire connection and damaged harnesses when disconnecting any connector.

1. Fuse Test

1. Verify all fuses are good.
2. Are all fuses good?
    a. **Yes.** Go to Test 2.
    b. **No.** Replace fuse. If fuse opens again, repair short to ground in that circuit.

2. Current DTC Test

1. Check for current DTCs. See Initial Diagnostics → Initial Diagnostics → Odometer Self-Diagnostics.

NOTE

Historic DTCs are not to be diagnosed unless the condition is reoccurring and intermittent.

2. Are current DTCs present?
    a. **Yes.** Refer to Initial Diagnostics → Initial Diagnostics → Diagnostics.
    b. **No.** Go to Test 3.

3. Odometer Function Test

1. Enter odometer self-diagnostics.
2. Did odometer self-diagnostics mode function properly?
    a. **Yes.** Refer to Initial Diagnostics → Initial Diagnostics → Diagnostics.
    b. **No.** Go to Test 4.

4. Odometer Inoperative Test

1. Turn IGN ON.
2. Does the odometer display illuminate?
    a. **Yes.** Go to Test 7.
    b. **No.** Go to Test 5.

5. Battery Power Test

1. Turn engine stop switch ON.
2. Does headlamp and/or tail lamp illuminate?
    a. **Yes.** Go to Test 6.
    b. **No.** Verify battery condition and connections. If all are good, see Serial Data → NO VEHICLE POWER OR LOST COMMUNICATION DTCS → No Vehicle Power: DTC U0140.

6. Starter Test

1. Attempt to start vehicle.
2. Does starter crank?
    a. **Yes.** See Instruments → Instruments.
    b. **No.** See Serial Data → Odometer Self-Diagnostic Inoperative: DTC U0001, U0011, B2274.

7. LHCM Test

1. With IGN ON, operate all left hand control functions.
2. Do any left hand controls function properly?
    a. **Yes.** All controls are operational except the trip switch. See Instruments → Trip Odometer Functions Inoperative, DTC B2255.
    b. **No.** All left hand control functions are inoperative. See Serial Data → NO VEHICLE POWER OR LOST COMMUNICATION DTCS → Left Hand Controls Inoperative: DTC U0141.

Diagnostic Tips

- The trip odometer reset switch is located in the left hand control module. The switch signal is sent to the speedometer over the CAN bus. If there is a problem with the CAN bus, the odometer self-diagnostic mode may not function.
- For a quick check of instrument function, perform a "WOW" test by entering odometer self-diagnostics. Background lighting will illuminate, gauge needles will sweep their full range of motion and all indicator lamps controlled by the CAN circuit will illuminate.
- If the instrument fails "WOW" test, check for battery power and ground to the instrument. If any feature in the IM is non-functional, see **Instruments → Instruments**.

Table 1. Diagnostic Trouble Codes (DTCs) and Fault Conditions

DTC	PRIORITY ORDER	FAULT CONDITION	SOLUTION
B1101	206	LHCM turn signal bulb out	Accessories, Horn, Lighting and Security → SWITCH DIAGNOSTICS
B1103	47	LHCM internal error	Accessories, Horn, Lighting and Security → SWITCH DIAGNOSTICS
B1151	205	RHCM turn signal bulb out	Accessories, Horn, Lighting and Security → SWITCH DIAGNOSTICS
B1153	46	RHCM internal error	Accessories, Horn, Lighting and Security → SWITCH DIAGNOSTICS
B1200	37	IM internal fault	Instruments → NO INSTRUMENT POWER DIAGNOSTICS
B1201	40	Internal fault - default cal	Instruments → NO INSTRUMENT POWER DIAGNOSTICS
B1214	316	External indicator bar short to battery	Instruments → INDICATOR LAMPS
B1215	317	External indicator bar open load	Instruments → INDICATOR LAMPS
B1216	318	External indicator bar short to ground	Instruments → INDICATOR LAMPS
B2102	4	System power output shorted high	Engine Management → SYSTEM POWER CIRCUIT DIAGNOSTICS
B2103	5	System power output shorted low	Engine Management → SYSTEM POWER CIRCUIT DIAGNOSTICS
B2104	6	System power output overloaded	Engine Management → SYSTEM POWER CIRCUIT DIAGNOSTICS
B2106	257	L4 output open	Accessories, Horn, Lighting and Security → HEADLAMP DIAGNOSTICS
B2107	225	L4 output shorted high	Accessories, Horn, Lighting and Security → HEADLAMP DIAGNOSTICS
B2108	226	L4 output shorted low	Accessories, Horn, Lighting and Security → HEADLAMP DIAGNOSTICS
B2109	227	L4 output overloaded	Accessories, Horn, Lighting and Security → HEADLAMP DIAGNOSTICS

B2112	132	ACC output shorted high	Accessories, Horn, Lighting and Security → ACC CIRCUIT DIAGNOSTICS
B2113	134	ACC output shorted low	Accessories, Horn, Lighting and Security → ACC CIRCUIT DIAGNOSTICS
B2114	136	ACC output overloaded	Accessories, Horn, Lighting and Security → ACC CIRCUIT DIAGNOSTICS
B2116	92	Fuel pump output open	Engine Management → FUEL PUMP DIAGNOSTICS
B2117	93	Fuel pump output shorted high	Engine Management → FUEL PUMP DIAGNOSTICS
B2118	94	Fuel pump output shorted low	Engine Management → FUEL PUMP DIAGNOSTICS
B2119	95	Fuel pump output overloaded	Engine Management → FUEL PUMP DIAGNOSTICS
B2121	58	Starter output open	Starting and Charging → STARTER OUTPUT DTCS
B2122	59	Starter output shorted high	Starting and Charging → STARTER OUTPUT DTCS
B2123	60	Starter output shorted low	Starting and Charging → STARTER OUTPUT DTCS
B2124	61	Starter output overloaded	Starting and Charging → STARTER OUTPUT DTCS
B2127	243	E4 output shorted high	Accessories, Horn, Lighting and Security → HORN DIAGNOSTICS
B2128	244	E4 output shorted low	Accessories, Horn, Lighting and Security → HORN DIAGNOSTICS
B2129	245	E4 output overloaded	Accessories, Horn, Lighting and Security → HORN DIAGNOSTICS
B2131	233	High beam output open	Accessories, Horn, Lighting and Security → HEADLAMP DIAGNOSTICS
B2132	234	High beam output shorted high	Accessories, Horn, Lighting and Security → HEADLAMP DIAGNOSTICS
B2133	235	High beam output shorted low	Accessories, Horn, Lighting and Security → HEADLAMP DIAGNOSTICS
B2134	236	High beam output overloaded	Accessories, Horn, Lighting and Security → HEADLAMP DIAGNOSTICS
B2136	229	Low beam output open	Accessories, Horn, Lighting and Security → HEADLAMP DIAGNOSTICS
B2137	230	Low beam output shorted high	Accessories, Horn, Lighting and Security → HEADLAMP DIAGNOSTICS
B2138	231	Low beam output shorted low	Accessories, Horn, Lighting and Security → HEADLAMP DIAGNOSTICS
B2139	232	Low beam output overloaded	Accessories, Horn, Lighting and Security → HEADLAMP DIAGNOSTICS
B2141	207	Left front turn signal output open	Accessories, Horn, Lighting and Security → FRONT

			TURN SIGNAL DIAGNOSTICS
B2143	214	Left front turn signal output shorted low	Accessories, Horn, Lighting and Security → FRONT TURN SIGNAL DIAGNOSTICS
B2144	215	Left front turn signal output overloaded	Accessories, Horn, Lighting and Security → FRONT TURN SIGNAL DIAGNOSTICS
B2146	216	Right front turn signal output open	Accessories, Horn, Lighting and Security → FRONT TURN SIGNAL DIAGNOSTICS
B2148	217	Right front turn signal output shorted low	Accessories, Horn, Lighting and Security → FRONT TURN SIGNAL DIAGNOSTICS
B2149	218	Right front turn signal output overloaded	Accessories, Horn, Lighting and Security → FRONT TURN SIGNAL DIAGNOSTICS
B2151	219	Left rear turn signal output open	Accessories, Horn, Lighting and Security → REAR TURN SIGNAL DIAGNOSTICS
B2153	220	Left rear turn signal output shorted low	Accessories, Horn, Lighting and Security → REAR TURN SIGNAL DIAGNOSTICS
B2154	221	Left rear turn signal output overloaded	Accessories, Horn, Lighting and Security → REAR TURN SIGNAL DIAGNOSTICS
B2156	222	Right rear turn signal output open	Accessories, Horn, Lighting and Security → REAR TURN SIGNAL DIAGNOSTICS
B2158	223	Right rear turn signal output shorted low	Accessories, Horn, Lighting and Security → REAR TURN SIGNAL DIAGNOSTICS
B2159	224	Right rear turn signal output overloaded	Accessories, Horn, Lighting and Security → REAR TURN SIGNAL DIAGNOSTICS
B2161	198	Brake lamp output open	Accessories, Horn, Lighting and Security → STOP LAMP DIAGNOSTICS
B2163	199	Brake lamp output shorted low	Accessories, Horn, Lighting and Security → STOP LAMP DIAGNOSTICS
B2164	200	Brake lamp output overloaded	Accessories, Horn, Lighting and Security → STOP LAMP DIAGNOSTICS
B2168	172	Running lights output shorted low	Accessories, Horn, Lighting and Security → RUNNING LAMP DIAGNOSTICS
B2169	173	Running lights output overloaded	Accessories, Horn, Lighting and Security → RUNNING LAMP DIAGNOSTICS
B2172	237	H2 output shorted high	Accessories, Horn, Lighting and Security → ALARM DIAGNOSTICS
B2173	238	H2 output shorted low	Accessories, Horn, Lighting and Security → ALARM DIAGNOSTICS
B2176	239	Security antenna output open	Accessories, Horn, Lighting and Security → SECURITY ANTENNA DIAGNOSTICS

B2177	240	Security antenna output shorted high	Accessories, Horn, Lighting and Security → SECURITY ANTENNA DIAGNOSTICS
B2178	241	Security antenna output shorted low	Accessories, Horn, Lighting and Security → SECURITY ANTENNA DIAGNOSTICS
B2183	249	G2 output shorted low	Accessories, Horn, Lighting and Security → DTC B2183, B2188, B2193, B2198
B2188	254	G3 output shorted low	Accessories, Horn, Lighting and Security → DTC B2183, B2188, B2193, B2198
B2193	257	H4 output shorted low	Accessories, Horn, Lighting and Security → DTC B2183, B2188, B2193, B2198
B2198	259	H3 output shorted low	Accessories, Horn, Lighting and Security → DTC B2183, B2188, B2193, B2198
B2206	51	Run/stop switch input open/shorted high	Starting and Charging → ENGINE STOP SWITCH DTCS
B2208	54	Run/stop switch input shorted low	Starting and Charging → ENGINE STOP SWITCH DTCS
B2210	55	Run/stop switch inputs both open	Accessories, Horn, Lighting and Security → SWITCH DIAGNOSTICS
B2212	56	Run/stop switch inputs both closed	Accessories, Horn, Lighting and Security → SWITCH DIAGNOSTICS
B2218	131	Neutral switch shorted low	Accessories, Horn, Lighting and Security → NEUTRAL SWITCH DIAGNOSTICS
B2223	197	Rear brake switch shorted low (light on)	Accessories, Horn, Lighting and Security → STOP LAMP DIAGNOSTICS
B2226	247	BAS input open	BCM not configured properly.
B2228	250	BAS input shorted low	BCM not configured properly.
B2250	128	Clutch switch stuck	Accessories, Horn, Lighting and Security → SWITCH DIAGNOSTICS
B2251	242	Horn switch stuck	Accessories, Horn, Lighting and Security → SWITCH DIAGNOSTICS
B2253	228	FTP switch stuck	Accessories, Horn, Lighting and Security → SWITCH DIAGNOSTICS
B2254	203	Left turn switch stuck	Accessories, Horn, Lighting and Security → SWITCH DIAGNOSTICS
B2255	246	Trip switch stuck	Instruments → Trip Odometer Functions Inoperative, DTC B2255
B2259	206	Aux lamp switch stuck	Accessories, Horn, Lighting and Security → SWITCH DIAGNOSTICS
B2260	57	Start switch stuck	Accessories, Horn, Lighting and Security → SWITCH DIAGNOSTICS

B2261	204	Right turn switch stuck	Accessories, Horn, Lighting and Security → SWITCH DIAGNOSTICS
B2262	196	Front brake switch stuck	Accessories, Horn, Lighting and Security → SWITCH DIAGNOSTICS
B2263	202	Hazard switch stuck	Accessories, Horn, Lighting and Security → SWITCH DIAGNOSTICS
B2270	27	BCM internal error	Accessories, Horn, Lighting and Security → SWITCH DIAGNOSTICS
B2271	26	BCM voltage low	Starting and Charging → BCM VOLTAGE DTCS
B2272	33	BCM/IM voltage high	Starting and Charging → BCM VOLTAGE DTCS
B2274	49	Constant battery line error	Serial Data → Odometer Self-Diagnostic Inoperative: DTC U0001, U0011, B2274
C0562	38	ABS voltage low	Starting and Charging → ABS VOLTAGE DIAGNOSTICS
C0563	40	ABS voltage high	Starting and Charging → ABS VOLTAGE DIAGNOSTICS
C1014	183	ABS ECU relay error	ABS → INTERNAL FAULT DIAGNOSTICS
C1021	191	ABS front WSS always zero	ABS → WSS DIAGNOSTICS
C1023	192	ABS rear WSS always zero	ABS → WSS DIAGNOSTICS
C1025	194	ABS front wheel speed intermittent	ABS → WSS DIAGNOSTICS
C1027	195	ABS rear wheel speed intermittent	ABS → WSS DIAGNOSTICS
C1029	193	ABS wheel speed difference too high	ABS → WSS DIAGNOSTICS
C1032	189	ABS front wheel speed circuit open/shorted	ABS → WSS DIAGNOSTICS
C1034	190	ABS rear wheel speed circuit open/shorted	ABS → WSS DIAGNOSTICS
C1040	184	ABS pump/motor error	ABS → INTERNAL FAULT DIAGNOSTICS
C1055	39	ABS ECU internal error	ABS → INTERNAL FAULT DIAGNOSTICS
C1061	185	ABS front apply solenoid circuit open/high resistance	ABS → INTERNAL FAULT DIAGNOSTICS
C1062	187	ABS front release solenoid circuit open/high resistance	ABS → INTERNAL FAULT DIAGNOSTICS
C1065	186	ABS rear apply solenoid circuit open/high resistance	ABS → INTERNAL FAULT DIAGNOSTICS
C1066	188	ABS rear release solenoid circuit open/high resistance	ABS → INTERNAL FAULT DIAGNOSTICS
C1159	43	ABS invalid stored VIN	ABS → INVALID VIN DIAGNOSTICS

C1178	41	ABS no VIN received from ECM	ABS → INVALID VIN DIAGNOSTICS
C1184	42	ABS invalid VIN from ECM	ABS → INVALID VIN DIAGNOSTICS
P0031	153	Front HO2S low/open	Engine Management → HO2S DIAGNOSTICS
P0032	156	Front HO2S shorted high	Engine Management → HO2S DIAGNOSTICS
P0051	154	Rear HO2S low/open	Engine Management → HO2S DIAGNOSTICS
P0052	155	Rear HO2S shorted high	Engine Management → HO2S DIAGNOSTICS
P0107	100	MAP sensor failed low/open	Engine Management → TMAP SENSOR DIAGNOSTICS
P0108	101	MAP sensor failed high/open port	Engine Management → TMAP SENSOR DIAGNOSTICS
P0112	123	IAT sensor shorted low	Engine Management → TMAP SENSOR DIAGNOSTICS
P0113	125	IAT sensor high/open	Engine Management → TMAP SENSOR DIAGNOSTICS
P0117	102	ET sensor shorted low	Engine Management → ET SENSOR DIAGNOSTICS
P0118	107	ET sensor high/open	Engine Management → ET SENSOR DIAGNOSTICS
P0120	76	TPS 1 range error	Engine Management → TCA DIAGNOSTICS
P0122	74	TPS 1 low	Engine Management → TCA DIAGNOSTICS
P0123	75	TPS 1 high/open	Engine Management → TCA DIAGNOSTICS
P0131	157	O2 sensor low/engine lean (front)	Engine Management → HO2S DIAGNOSTICS
P0132	159	Engine running rich (front)	Engine Management → HO2S DIAGNOSTICS
P0134	161	Oxygen sensor high/open (front)	Engine Management → HO2S DIAGNOSTICS
P0151	158	O2 sensor low/engine lean (rear)	Engine Management → HO2S DIAGNOSTICS
P0152	160	Engine running rich (rear)	Engine Management → HO2S DIAGNOSTICS
P0154	162	O2 sensor high/open (rear)	Engine Management → HO2S DIAGNOSTICS
P0220	79	TPS 2 range error	Engine Management → TCA DIAGNOSTICS
P0222	77	TPS 2 low/open	Engine Management → TCA DIAGNOSTICS
P0223	78	TPS 2 high	Engine Management → TCA DIAGNOSTICS
P0261	96	Fuel injector low/open (front)	Engine Management → FUEL INJECTOR DIAGNOSTICS
P0262	97	Fuel injector shorted high (front)	Engine Management → FUEL INJECTOR DIAGNOSTICS
P0264	98	Fuel injector low/open (rear)	Engine Management → FUEL INJECTOR DIAGNOSTICS
P0265	99	Fuel injector shorted high (rear)	Engine Management → FUEL INJECTOR DIAGNOSTICS
P0325	139	Knock sensor front open circuit	Engine Management → KNOCK SENSOR DIAGNOSTICS
P0327	140	Knock sensor front circuit low	Engine Management → KNOCK SENSOR DIAGNOSTICS

P0328	141	Knock sensor front circuit high	Engine Management → KNOCK SENSOR DIAGNOSTICS
P0330	142	Knock sensor rear open circuit	Engine Management → KNOCK SENSOR DIAGNOSTICS
P0332	143	Knock sensor rear circuit low	Engine Management → KNOCK SENSOR DIAGNOSTICS
P0333	144	Knock sensor rear circuit high	Engine Management → KNOCK SENSOR DIAGNOSTICS
P0371	65	CKP sensor wrong number of pulses	Engine Management → CKP SENSOR DIAGNOSTICS
P0374	64	CKP sensor no pulses	Engine Management → CKP SENSOR DIAGNOSTICS
P0444	147	Purge solenoid low/open	Engine Management → PURGE SOLENOID DIAGNOSTICS
P0445	148	Purge solenoid shorted high	Engine Management → PURGE SOLENOID DIAGNOSTICS
P0462	174	Fuel sender shorted low	Instruments → FUEL LEVEL DIAGNOSTICS
P0463	175	Fuel sender shorted high/open	Instruments → FUEL LEVEL DIAGNOSTICS
P0502	137	VSS failed low	Engine Management → PURGE SOLENOID DIAGNOSTICS
P0503	138	VSS failed high	Engine Management → VSS DIAGNOSTICS
P0505	148	Idle speed control - unstable	Engine Management → IDLE SPEED CONTROL DIAGNOSTICS
P0522	168	Engine oil pressure sensor/switch shorted low	Instruments → INDICATOR LAMPS
P0523	169	Engine oil pressure sensor/switch shorted high/open	Instruments → INDICATOR LAMPS
P0562	127	ECM voltage low	Starting and Charging → BATTERY AND SYSTEM VOLTAGE DIAGNOSTICS
P0563	34	ECM voltage high	Starting and Charging → BATTERY AND SYSTEM VOLTAGE DIAGNOSTICS
P0572	202	Brake switch low	Accessories, Horn, Lighting and Security → BRAKE SWITCH DIAGNOSTICS
P0577	163	Cruise control input error	Accessories, Horn, Lighting and Security → Cruise Control
P0603	29	ECM EEPROM memory error	Engine Management → ECM INTERNAL DIAGNOSTICS
P0605	28	ECM FLASH memory error	Engine Management → ECM INTERNAL DIAGNOSTICS
P0641	62	5 Volt reference out of range	Engine Management → 5V REFERENCE DIAGNOSTICS
P0651	63	5 Volt reference 2 out of range	Engine Management → 5V REFERENCE DIAGNOSTICS
P1009	32	VTD disabled fuel due to bad password	Engine Management → DTC P1009

P1270	67	TGS 2 A/D validation error	Engine Management → DTC P1270
P1501	166	JSS low	Engine Management → JSS DIAGNOSTICS
P1502	167	JSS high/open	Engine Management → JSS DIAGNOSTICS
P1505	445	Power limit violation	Engine Management → HESITATION OR LOSS OF POWER
P1510	447	ETC limited performance mode	Engine Management → ETC MANAGEMENT DIAGNOSTICS
P1511	448	ETC power management mode	Engine Management → ETC MANAGEMENT DIAGNOSTICS
P1512	449	ETC forced idle mode	Engine Management → ETC MANAGEMENT DIAGNOSTICS
P1514	87	ETC airflow error	Engine Management → ETC ERROR DIAGNOSTICS
P1600	66	ETC watchdog error	Engine Management → ETC ERROR DIAGNOSTICS
P1655	164	ACR solenoid low/open	Engine Management → ACR Diagnostics
P1656	165	ACR solenoid shorted high	Engine Management → ACR Diagnostics
P2100	82	ETC driver open circuit	Engine Management → ETC ACTUATOR DIAGNOSTICS
P2101	83	ETC actuation error	Engine Management → ETC ACTUATOR DIAGNOSTICS
P2102	84	ETC driver shorted low	Engine Management → ETC ACTUATOR DIAGNOSTICS
P2103	85	ETC driver shorted high	Engine Management → ETC ACTUATOR DIAGNOSTICS
P2105	446	ETC forced shutdown mode	Engine Management → DTC P2105, P2107
P2107	68	ETC driver internal error	Engine Management → DTC P2105, P2107
P2119	81	ETC actuator return error	Engine Management → DTC P2119
P2122	69	TGS 1 low/open	Engine Management → TGS DIAGNOSTICS
P2123	70	TGS 1 high	Engine Management → TGS DIAGNOSTICS
P2127	71	TGS 2 low/open	Engine Management → TGS DIAGNOSTICS
P2128	72	TGS 2 high	Engine Management → TGS DIAGNOSTICS
P2135	80	TPS correlation error	Engine Management → CORRELATION ERROR DIAGNOSTICS
P2138	73	TGS correlation error	Engine Management → CORRELATION ERROR DIAGNOSTICS
P2176	86	ETC zero position learning error	Engine Management → DTC P2176
P2300	88	Ignition coil driver low/open (front)	Engine Management → IGN COIL DRIVER DIAGNOSTICS
P2301	89	Ignition coil driver shorted high (front)	Engine Management → IGN COIL DRIVER DIAGNOSTICS

P2303	90	Ignition coil driver low/open (rear)	Engine Management → IGN COIL DRIVER DIAGNOSTICS
P2304	91	Ignition coil driver shorted high (rear)	Engine Management → IGN COIL DRIVER DIAGNOSTICS
U0001	1	CAN BUS error	Serial Data → Odometer Self-Diagnostic Inoperative: DTC U0001, U0011, B2274
U0002	16	CAN comm bus perf error	Serial Data → Odometer Self-Diagnostic Inoperative: DTC U0001, U0011, B2274
U0003	13	Network management monitoring	Serial Data → NO VEHICLE POWER OR LOST COMMUNICATION DTCS
U0011	2	CAN bus low shorted to CAN bus high	Serial Data → Odometer Self-Diagnostic Inoperative: DTC U0001, U0011, B2274
U0100	7	Lost comm w/ECM	Serial Data → NO VEHICLE POWER OR LOST COMMUNICATION DTCS
U0121	11	Lost comm w/ABS	Serial Data → NO VEHICLE POWER OR LOST COMMUNICATION DTCS
U0140	3	Lost comm w/BCM	Serial Data → NO VEHICLE POWER OR LOST COMMUNICATION DTCS
U0141	9	Lost comm w/LHCM	Serial Data → NO VEHICLE POWER OR LOST COMMUNICATION DTCS
U0142	8	Lost comm w/RHCM	Serial Data → NO VEHICLE POWER OR LOST COMMUNICATION DTCS
U0156	10	Lost comm w/speedo	Serial Data → NO VEHICLE POWER OR LOST COMMUNICATION DTCS
U0157	14	Lost comm w/tach	Serial Data → NO VEHICLE POWER OR LOST COMMUNICATION DTCS
U0300	15	Internal control module software incompatibility	Serial Data → NO VEHICLE POWER OR LOST COMMUNICATION DTCS

Special Tools

Description	Part Number	Qty.
DIGITAL TECHNICIAN II	HD-48650	1

There are two levels of diagnostics.

- The most sophisticated mode uses a computer-based diagnostic package called **DIGITAL TECHNICIAN II (Part Number:HD-48650)**.
- The second mode requires using the odometer self-diagnostics. Speedometer, BCM, ECM and ABS (if equipped) DTCs can be accessed and cleared.

See **Figure 1** and **Figure 2**. All codes will be displayed with either a "c", "p" or "h" after them. This indicates a current, pending or historic code. Diagnostic procedures are designed for use with current DTCs. Current DTCs will frequently suggest part replacement. When diagnosing a historic DTC, the procedures can be helpful but should not lead to part replacement without verification that the part is faulty.

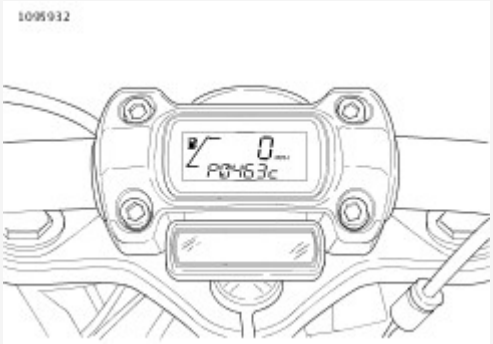

View interactive image

Figure 1. Current Code

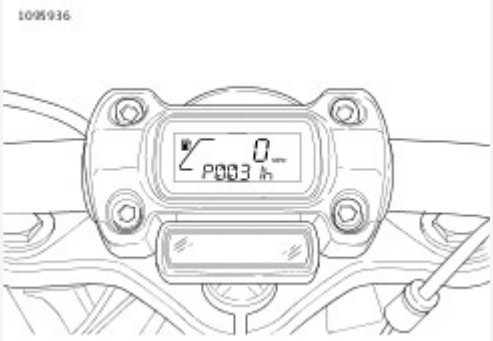

View interactive image

Figure 2. Historic Code

Diagnostic Mode

1. To enter diagnostic mode, press and hold the trip odometer reset switch located on the left handlebar controls, while turning the IGN ON.

NOTE

- "IGN ON" means that the engine stop switch is set to RUN (although the engine is not running).
- The trip odometer reset switch is located in the left hand control module. The switch signal is sent to the speedometer over the CAN bus. Any CAN bus issues may interrupt odometer self-diagnostics.

2. Release the trip odometer reset switch. "diag" will appear on the odometer display.
3. Press and release the trip odometer reset switch. ECM will appear on the odometer display. It will have either a "Y" or an "N" after it, depending if there are any ECM codes or not.
4. Quickly press and release the trip odometer reset switch to cycle through the modules. The modules include the BCM, SPDO and ABS.
5. Once the desired module is displayed, press and hold the trip odometer reset switch.
6. If any DTCs are stored in the module, the odometer will display the DTC. Quickly pressing and releasing the trip odometer reset switch will cycle through the stored DTCs.

NOTE

When reading DTCs be sure to note whether there is a "c", "p" or "h" behind the code.

7. When all the DTCs have been cycled the odometer will display "end".
8. To clear all the DTCs in that module press and hold the trip odometer reset switch, while a DTC is displayed. If DTCs are not to be cleared quickly press and release the trip odometer reset switch. The part number of the module will be displayed.
9. Press and release the trip odometer reset switch again to continue to the next module.
10. Make note of all DTCs. Clear all the DTCs and operate the vehicle to verify DTCs set and are current. Historic DTCs are not to be diagnosed unless the condition is reoccurring and intermittent.
11. Turn the IGN OFF to exit diagnostic mode. If IGN is not turned off, vehicle will exit diagnostics mode when vehicle starts moving.

Special Tools

Description	Part Number	Qty.
DIGITAL TECHNICIAN II	HD-48650	1

There are three types of DTCs: current, pending and historic. The odometer self-diagnostics displays all codes and differentiates between current and historic with a letter designator. The computer-based diagnostic package called **DIGITAL TECHNICIAN II (Part Number:HD-48650)** differentiates between these three types.

NOTE

- Current DTCs reside in the memory of the ECM, BCM, instruments or ABS module (if equipped) until the DTC is resolved.
- DTCs are designated by a P, C, B or U depending on the type of code and what module sets them. The ECM sets "P" codes to indicate issues monitored by the ECM. The ABS module sets "C" codes indicating an issue with the ABS on the vehicle. The instruments or BCM can all set "B" codes. All the modules set "U" codes when there is an issue causing the modules not to communicate properly.

Current

Current DTCs are those which presently disrupt motorcycle operation and are set during the current ignition cycle. To determine if current DTCs are present, clear the DTCs and operate the vehicle within the parameters for setting the DTC. See the appropriate diagnostic procedures for solutions.

Pending

Some DTCs require multiple occurrences or drive cycles to set. When these DTCs are first recognized, but have not repeated enough to set as a current DTC, they are reported as pending DTCs.

Historic

If a particular problem happens to resolve itself, the active status problem is dropped and it becomes a historic DTC rather than a current DTC. DTCs will also lose their current status when the ignition is turned off. If the problem still exists when the ignition is turned ON, the code will show as current.

A historic DTC can be cleared by use of the odometer self-diagnostics or after a total of 40 error-free ignition cycles (start and run cycle) have elapsed.

It is important to note that historic DTCs will exist whenever the system indicates the existence of a current fault. See **Initial Diagnostics → Initial Diagnostics → Multiple Trouble Codes** if multiple DTCs are found.

Diagnostic procedures are designed for use with current DTCs. Current DTCs will frequently suggest part replacement. When diagnosing a historic DTC, the procedures can be helpful but should not lead to part replacement without verification that the part is faulty.

All DTCs are assigned a priority number to determine the order in which they should be diagnosed. If there are multiple DTCs present, always diagnose the highest priority first. Refer to **Initial Diagnostics → Initial Diagnostics → Diagnostics**.

1. Complete the repair.
2. Restore connections.
3. Clear DTCs.
4. Start vehicle. Perform several cycles to verify a code did not return.
5. Perform odometer self-diagnostics test to verify repair and DTCs have been cleared. If any DTCs are still present, refer to **Initial Diagnostics → Initial Diagnostics → Diagnostics**.

Clear DTCs after any diagnostic or repair procedure. The odometer is capable of displaying and clearing ECM, BCM, IM, tachometer and ABS DTCs. Once the DTCs are cleared perform a road test to verify DTCs do not return. It is important to perform a road test and not simply start the motorcycle since some DTCs may require vehicle speed or other inputs in order to validate repair.

See **Figure 1**. The security lamp is controlled by the BCM. The security lamp will be turned on when non-emissions related current codes are present.

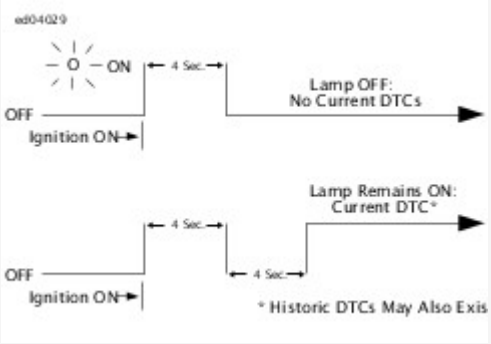

View interactive image

Figure 1. Security Lamp Operation

To diagnose ECM system problems, start by observing the behavior of the check engine lamp.

NOTE

- "IGN ON" means that the engine stop switch is set to RUN (although the engine is not running).
- When the IGN is turned ON, check engine lamp will illuminate.
- Start engine, if it fails to turn off after start up, DTC exists.
- Emissions related DTCs illuminate the check engine lamp for three warm up cycles after the DTC has transitioned from current to historic.

1. See **Figure 1**. After engine startup, one of two events may occur.
   a. The lamp turns off, which indicates there are no current fault conditions or stored DTCs currently detected by the ECM.
   b. If the lamp continues to illuminate and remains illuminated, a current or historic DTC exists.
2. See **Initial Diagnostics → Initial Diagnostics → Code Types** for a complete description of DTC formats.

NOTE

Some DTCs can only be fully diagnosed during actuation. For example, a problem with the ignition coil will be considered a current fault even after the problem is corrected. The ECM will not know of its resolution until after the coil is exercised by the vehicle start sequence. In this manner, there may sometimes be a false indication of the current DTC.

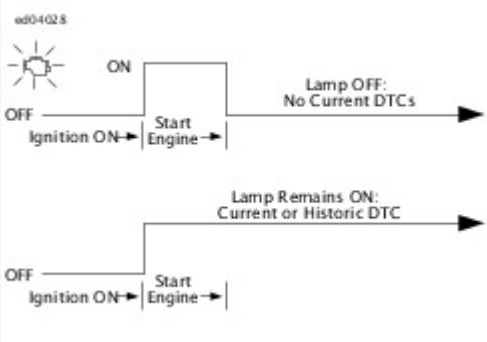

View interactive image

Figure 1. Check Engine Lamp

If no DTCs are present, address any symptoms indicating a malfunction. Refer to Table 1.

Table 1. Symptom Table

CHAPTER	SYMPTOM	DIAGNOSTIC PROCEDURE
Serial Data	IM inoperative	Serial Data → NO VEHICLE POWER OR LOST COMMUNICATION DTCS
	Left hand controls inoperative	Serial Data → NO VEHICLE POWER OR LOST COMMUNICATION DTCS
	No vehicle power	Serial Data → NO VEHICLE POWER OR LOST COMMUNICATION DTCS
	Odometer self-diagnostics inoperative	Serial Data → Odometer Self-Diagnostic Inoperative: DTC U0001, U0011, B2274
Starting and Charging	Battery runs down during use	Starting and Charging → CHARGING SYSTEM
	Low battery after extended IGN OFF	Starting and Charging → CHARGING SYSTEM
	Low or no charging	Starting and Charging → CHARGING SYSTEM
	Nothing clicks	Starting and Charging → STARTING SYSTEM
	Overcharging	Starting and Charging → CHARGING SYSTEM
	Starter solenoid clicks	Starting and Charging → STARTING SYSTEM
	Starter spins but does not engage	Starting and Charging → STARTING SYSTEM
	Starter stalls or spins too slowly	Starting and Charging → STARTING SYSTEM
Instruments	High beam indicator always on	Instruments → INDICATOR LAMPS
	High beam indicator inoperative	Instruments → INDICATOR LAMPS
	Low fuel lamp always on	Instruments → INDICATOR LAMPS
	Low fuel lamp flashes at steady rate	Fuel sender DTC set. See Initial Diagnostics → Initial Diagnostics.
	Low fuel lamp inoperative	Instruments → INDICATOR LAMPS
	Neutral lamp always on	Instruments → INDICATOR LAMPS
	Neutral lamp inoperative	Instruments → INDICATOR LAMPS
	No instrument power	Instruments → NO INSTRUMENT POWER DIAGNOSTICS
	Odometer displays "DIAG" at IGN ON	Instruments → Trip Odometer Functions Inoperative, DTC B2255
	Oil pressure lamp always on	Instruments → INDICATOR LAMPS
	Oil pressure lamp inoperative	Instruments → INDICATOR LAMPS

	One or all indicator lamps inoperative	Initial Diagnostics → Initial Diagnostics
	Trip odometer functions inoperative	Instruments → Trip Odometer Functions Inoperative, DTC B2255
	Turn signal indicator always on	Instruments → INDICATOR LAMPS
	Turn signal indicator inoperative	Instruments → INDICATOR LAMPS
Accessories, Horn, Lighting and Security	ACC power inoperative	Accessories, Horn, Lighting and Security → ACC CIRCUIT DIAGNOSTICS
	Any hand control switch inoperative	Accessories, Horn, Lighting and Security → SWITCH DIAGNOSTICS
	Auxiliary lamps inoperative	Accessories, Horn, Lighting and Security → HEADLAMP DIAGNOSTICS
	Front running lamps inoperative	Accessories, Horn, Lighting and Security → RUNNING LAMP DIAGNOSTICS
	High beam headlamp inoperative	Accessories, Horn, Lighting and Security → HEADLAMP DIAGNOSTICS
	Horn always on	Accessories, Horn, Lighting and Security → HORN DIAGNOSTICS
	Horn inoperative	Accessories, Horn, Lighting and Security → HORN DIAGNOSTICS
	License plate lamp inoperative	Accessories, Horn, Lighting and Security → RUNNING LAMP DIAGNOSTICS
	Low beam headlamp inoperative	Accessories, Horn, Lighting and Security → HEADLAMP DIAGNOSTICS
	Rear running lamps inoperative	Accessories, Horn, Lighting and Security → RUNNING LAMP DIAGNOSTICS
	Signature headlamp inoperative	Accessories, Horn, Lighting and Security → ACC CIRCUIT DIAGNOSTICS
	Stop lamp always on	Accessories, Horn, Lighting and Security → STOP LAMP DIAGNOSTICS
	USB port inoperative	Accessories, Horn, Lighting and Security → ACC CIRCUIT DIAGNOSTICS
	Will not cancel upon turn completion, no DTCs	Accessories, Horn, Lighting and Security → Turn Signals
Engine Management	Engine cranks but will not start	Engine Management → Engine Cranks But Will Not Start
	Erratic idle	Engine Management → Erratic Idle
	Hesitation or loss of power	Engine Management → ENGINE PERFORMANCE DIAGNOSTICS

	Misfire at idle or under load	Engine Management → Misfire at Idle or Under Load
	Side stand displayed on speedometer	Engine Management → JSS DIAGNOSTICS
	Starts hard or emits black smoke	Engine Management → ENGINE PERFORMANCE DIAGNOSTICS
	Starts, then stalls	Engine Management → STARTS, THEN STALLS
ABS	ABS indicator always on or inoperative	ABS → ABS INDICATOR ALWAYS ON, FLASHING OR INOPERATIVE

Special Tools

Description	Part Number	Qty.
HD BATTERY DIAGNOSTIC STATION	GRX-3110HD	1
FLUKE AC/DC CURRENT PROBE	HD-39617	1
DIGITAL MULTIMETER (FLUKE 78)	HD-39978	1
TEST CONNECTOR KIT	HD-41404	1
BREAKOUT BOX	HD-42682	1
BREAKOUT BOX ADAPTERS	HD-46601	1
ABS BREAKOUT BOX	HD-48642	1
DIGITAL TECHNICIAN II	HD-48650	1
WHEEL SPEED SENSOR TEST LEAD	HD-50341	1
BREAKOUT BOX	HD-50390-1	1
BCM CABLE	HD-50390-2	1
BCM OVERLAY	HD-50390-2-P	1
ECM CABLE	HD-50390-4	1
ECM OVERLAY	HD-50390-4-P	1
INLINE SPARK TESTER KIT	HD-51724	1

GRX-3110 HD Battery Diagnostic Station

Follow the instructions in the **HD BATTERY DIAGNOSTIC STATION (Part Number:GRX-3110HD)** instruction manual to perform a battery test. The test results include a decision on the battery condition.

View interactive image

Figure 1. Advanced Battery Conductance and Electrical System Analyzer Kit

HD-51724 Inline Spark Tester Kit

See Figure 2. The INLINE SPARK TESTER KIT (Part Number:HD-51724) is used to verify adequate spark at the spark plug. Install the inline spark tester between front ignition coil cable and spark plug. Start engine and inspect tester light. The light will flash on each spark event if power is transmitted to the plug. Remove inline spark tester and install cable on plug. Repeat procedure for rear cylinder.

NOTE

The coil will not produce spark voltage with both spark plugs removed. When checking for spark, use the inline spark tester with both plugs installed.

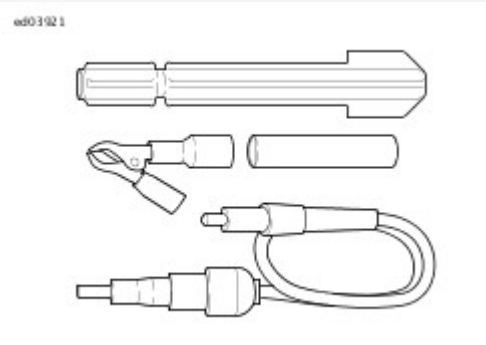

View interactive image

Figure 2. Spark Tester

HD-39978 Digital Multimeter (Fluke 78)

The DIGITAL MULTIMETER (FLUKE 78) (Part Number:HD-39978) is used for various tests throughout this manual.

View interactive image

Figure 3. Digital Multimeter (Fluke 78)

HD-39617 Fluke AC/DC Current Probe

The FLUKE AC/DC CURRENT PROBE (Part Number:HD-39617) is used to measure current draw. Used in conjunction with DIGITAL MULTIMETER (FLUKE 78) (Part Number:HD-39978). Connect the current probe to positive (+) and negative (-) input terminals on the multimeter. Position the rotary switch to mV dc (millivolt direct current). Push the ON/OFF button and the ON

indicator will illuminate. With the inductive jaws empty, turn the zero adjust so that the multimeter reads 0.000 mV. Clamp the inductive jaws around the conductor that is being tested. With the circuit activated read the multimeter display, 1 mV = 1 A.

View interactive image

Figure 4. Fluke AC/DC Current Probe

HD-41404 Harness Connector Test Kit

The **TEST CONNECTOR KIT (Part Number:HD-41404)** contains pin and socket terminals and stackable banana jack patch cords used to test circuits. The pin and socket terminals are used to connect to various connectors used on the vehicle. See the tool instruction sheet for specific terminal usage.

NOTE

- Insert probe tip straight into the terminal cavity.
- Do not wiggle or move the probe tip once it is inserted into the terminal.
- Do not use more than one probe per terminal or cavity at one time.

HD-50341 Wheel Speed Sensor Test Lead

The **WHEEL SPEED SENSOR TEST LEAD (Part Number:HD-50341)** is a stackable banana jack patch cord with a built in resistor to test the wheels speed sensor circuit. Used in conjunction with **TEST CONNECTOR KIT (Part Number:HD-41404)**, connect the test lead in place of the WSS when required during diagnostics.

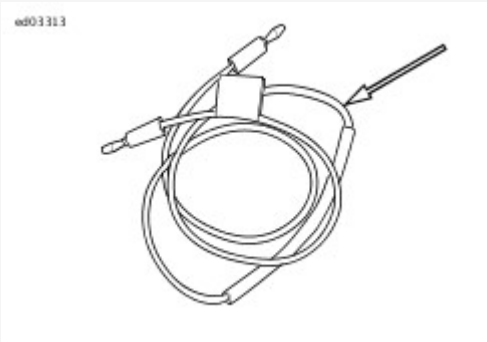

View interactive image

Figure 5. Wheel Speed Sensor Test Lead

HD-42682 Breakout Box (Instruments)

The **BREAKOUT BOX (Part Number:HD-42682)** and **BREAKOUT BOX ADAPTERS (Part Number:HD-46601)** connect to the speedometer [39]. Used in conjunction with a multimeter, it allows circuit diagnosis of wiring harness and connections without having to probe with sharp objects. Install breakout box in series using the black connectors as follows:

1. Access the speedometer [39].
2. See **Figure 6**. Press latch and disconnect [39B].
3. Connect **BREAKOUT BOX ADAPTERS (Part Number:HD-46601)** to [39A] and [39B].
4. Attach black connectors from **BREAKOUT BOX (Part Number:HD-42682)** to **BREAKOUT BOX ADAPTERS (Part Number:HD-46601)**. All tests will be performed using the black side of the breakout box.
5. When testing is completed, remove the breakout box and jumper harness and restore connections.

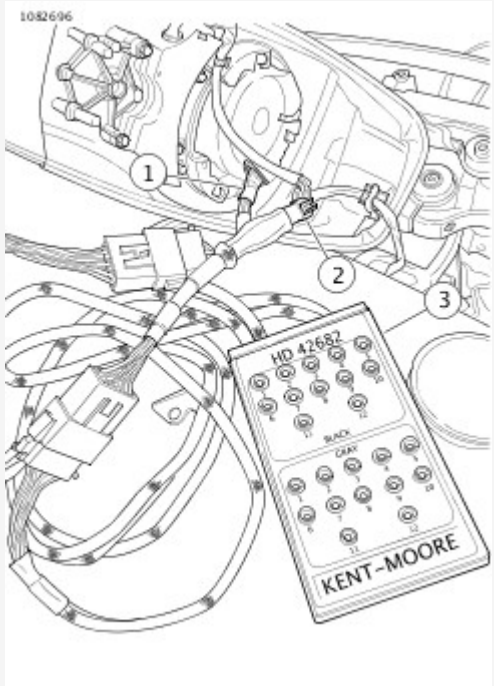

View interactive image

1	Speedometer [39]
2	Breakout box adapter
3	Breakout box (BOB)

Figure 6. Breakout Box Connection

HD-50390-1 Breakout Box (ECM)

The **BREAKOUT BOX (Part Number:HD-50390-1)** and **ECM CABLE (Part Number:HD-50390-4)** splice into the main harness. Used in conjunction with a multimeter, it allows circuit diagnosis of wiring harness and connections without having to probe with sharp objects. Install breakout box in series as follows:

NOTE

See wiring diagrams for ECM terminal functions. ECM is located under the left side cover.

1. Access the ECM.
2. Press latch and disconnect ECM connectors [78B-1], [78B-2] and [78B-3].
3. See Figure 7. Connect BREAKOUT BOX (Part Number:HD-50390-1) and ECM CABLE (Part Number:HD-50390-4) to connectors.
4. Verify ECM OVERLAY (Part Number:HD-50390-4-P) is in position on breakout box.
5. When testing is completed, remove the breakout box and restore connections.

View interactive image

1	ECM [78A-1], [78A-2] and [78A-3]
2	Breakout box (BOB)
3	Wire harness [78B-1], [78B-2] and [78B-3]

Figure 7. ECM Breakout Box Connection

HD-50390-1 Breakout Box (BCM)

The BREAKOUT BOX (Part Number:HD-50390-1) and BCM CABLE (Part Number:HD-50390-2) splice into the main harness. Used in conjunction with a multimeter, it allows circuit diagnosis of wiring harness and connections without having to probe with sharp objects. Install breakout box in series as follows:

NOTE

See wiring diagrams for BCM terminal functions. BCM is located in front of the rear tire.

1. Access the BCM.
2. Press latch and disconnect BCM [242B].
3. See Figure 8. Connect BREAKOUT BOX (Part Number:HD-50390-1) and BCM CABLE (Part Number:HD-50390-2) to connectors.
4. Verify BCM OVERLAY (Part Number:HD-50390-2-P) is in position on breakout box.
5. When testing is completed, remove the breakout box and restore connections.

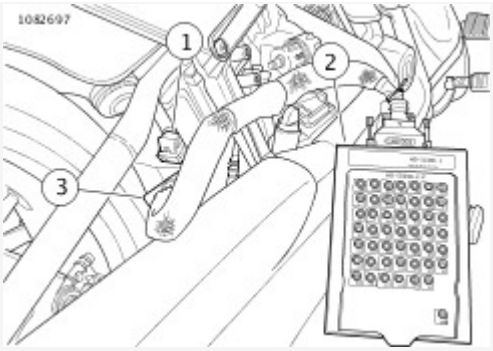

View interactive image

1	BCM [242A]
2	Breakout box (BOB)
3	Wiring harness [242B]

Figure 8. BCM Breakout Box Connection

HD-48642 Breakout Box (ABS)

The **ABS BREAKOUT BOX (Part Number:HD-48642)** connects to the ABS module [166]. Used in conjunction with a multimeter, it allows circuit diagnosis of wiring harness and connections without having to probe with sharp objects. Install breakout box in series as follows:

1. Access the ABS module.
2. Press latch and disconnect ABS module [166B].
3. See **Figure 9**. Connect **ABS BREAKOUT BOX (Part Number:HD-48642)** to connectors.
4. When testing is completed remove the breakout box and restore connections.

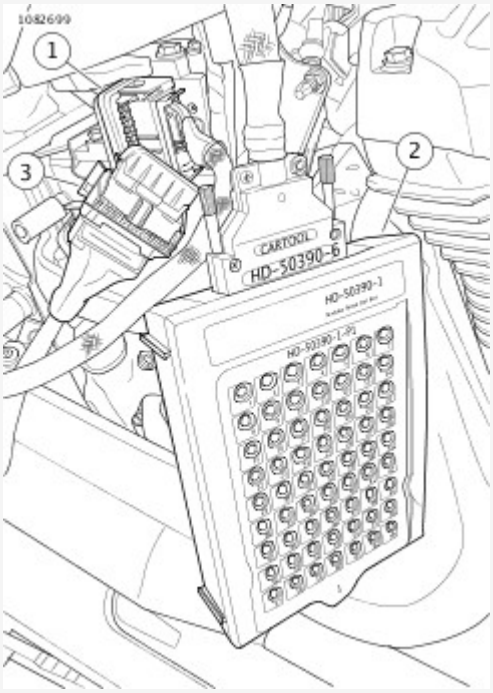

View interactive image

1	ECU [266A]
2	Breakout box (BOB)
3	ECU harness [266B]

Figure 9. ABS Breakout Box Connection

HD-48650 Digital Technician II

DIGITAL TECHNICIAN II (Part Number:HD-48650) is a computer based diagnostic device used to communicate/diagnose and program systems/modules.

Diagnostics in this manual are developed under the assumption that DTII is not available.

Voltage drop test:

- Helps locate poor connections or components with excessive resistance.
- Measures the difference in potential or actual voltage dropped between source and destination.
- Checks integrity of the wiring, switches, fuses, connectors and contacts between source and destination.
- Identifies poor grounds.

A voltage drop test measures the difference in voltage between two points in a circuit. The amount of voltage dropped over any part of a circuit is directly related to the amount of resistance in that part of the circuit and the current flowing through it.

Components such as wires, switches and connectors are designed to have very little resistance and very little voltage drop. A voltage drop greater than 1.0V across these components indicates a high resistance and possible fault.

The benefits of testing this way are:

- Readings are not as sensitive to real battery voltage.
- Readings show the actual voltage dropped not just the presence of voltage.
- System is tested as it is actually being used.
- Testing is more accurate and displays hard-to-find poor connections.
- Starting circuits, lighting circuits and ignition circuits can be tested with this approach. Start from the most positive and go to the most negative destination or component.

When testing a typical power circuit, place positive (red) meter lead on most positive part of circuit or positive battery post. There is nothing more positive than the positive post of the battery.

Place negative (black) meter lead at positive side of connector in question. Activate circuit. Move negative meter lead through the circuit until high voltage drop is found.

When testing a typical ground circuit, place negative lead on most negative part of circuit or negative battery post. There is nothing more negative than the negative post of the battery.

Place positive meter lead at negative side of connector in question. Activate circuit. Move positive meter lead through the circuit until high voltage drop is found.

The following steps demonstrate a typical starter circuit voltage drop test:

1. Disconnect CKP [79] to prevent engine from starting.
    a. See **Figure 1**. Set meter to VDC. Connect red meter lead to positive battery post.
    b. Connect black meter lead to terminal 2 of starter solenoid. Observe meter reading.
    c. Crank starter and observe meter reading. A reading higher than 1V indicates excessive voltage drop.

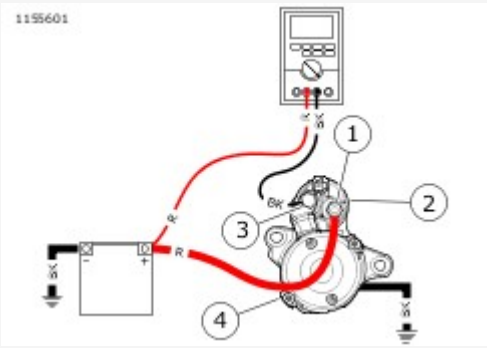

View interactive image

1	Terminal 1
2	Starter solenoid

3	Terminal 2
4	Starter motor

Figure 1. To Starter Solenoid Starter Terminal

2. See **Figure 2**. Move black meter lead to terminal 1 on starter solenoid. Crank starter. Observe voltage drop.

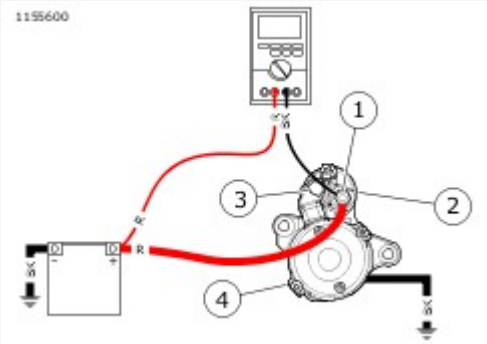

View interactive image

1	Terminal 1
2	Starter solenoid
3	Terminal 2
4	Starter motor

Figure 2. To Starter Solenoid Battery Terminal

3. See **Figure 3**. Move black meter lead to negative battery post and red meter lead to starter mounting bolt. Crank starter. Observe voltage drop.

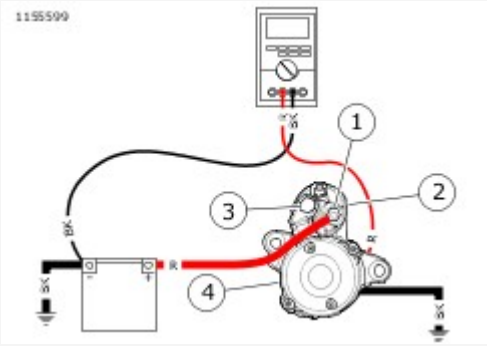

View interactive image

1	Terminal 1
2	Starter solenoid
3	Terminal 2

4	Starter motor

Figure 3. Starter Ground Circuit

Special Tools

Description	Part Number	Qty.
DIGITAL MULTIMETER (FLUKE 78)	HD-39978	1
DIGITAL TECHNICIAN II	HD-48650	1
BREAKOUT BOX	HD-50390-1	1
ECM CABLE	HD-50390-4	1
ECM OVERLAY	HD-50390-4-P	1

Wiggle test checks for the presence of intermittents in a wiring harness. If available, use **DIGITAL TECHNICIAN II (Part Number:HD-48650)** to perform wiggle test.

1. See **Figure 1**. Connect **DIGITAL MULTIMETER (FLUKE 78) (Part Number:HD-39978)** to wiring harness between suspect connections. When diagnosing ECM connections, use **BREAKOUT BOX (Part Number:HD-50390-1)**, **ECM CABLE (Part Number:HD-50390-4)** and **ECM OVERLAY (Part Number:HD-50390-4-P)** to simplify the procedure. See **Initial Diagnostics → DIAGNOSTIC TOOLS**.
2. Set the multimeter to read voltage changes.
3. Start motorcycle engine and run at idle.
4. Shake or wiggle harness to detect intermittents. If intermittents are present, radical voltage changes register on multimeter.

View interactive image

Figure 1. Digital Multimeter (Fluke 78)

Special Tools

Description	Part Number	Qty.
DIGITAL TECHNICIAN II	HD-48650	1

CAN bus circuits are used by modules and diagnostic tools to share information. The IM, ECM, BCM, hand controls and ABS (if equipped) all communicate on the CAN bus. The CAN communication uses a (W/BK) and (W/R) wire in a twisted pair that runs to all the modules. It is used to transfer data from one module to the other. It also runs to the DLC [91] and is used to communicate with the modules using **DIGITAL TECHNICIAN II (Part Number:HD-48650)**.

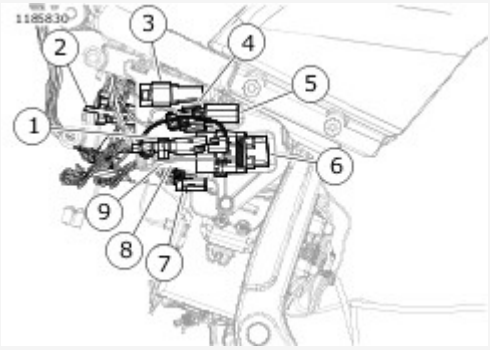

View interactive image

1	Battery tender [281]
2	DLC [91]
3	Termination resistor [319]
4	P&A accessory [325]
5	Fuse holder [332]
6	Fuse block [64]
7	ECM [78-3]
8	ECM [78-2] (behind sub caddy)
9	ECM [78-1] (behind sub caddy)

Figure 1. Behind Left Side Cover

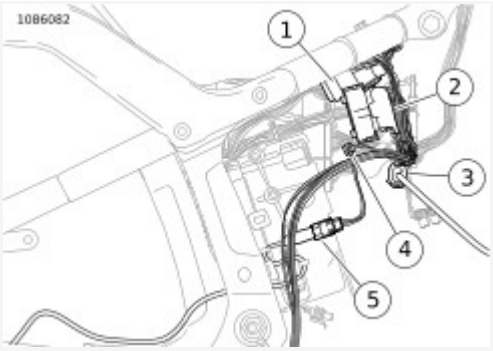

View interactive image

1	Engine harness [145]
2	ABS EHCU [166]
3	Rear HO2S [137]
4	Starter solenoid [128]
5	Rear WSS [168]

Figure 2. Behind Right Side Cover

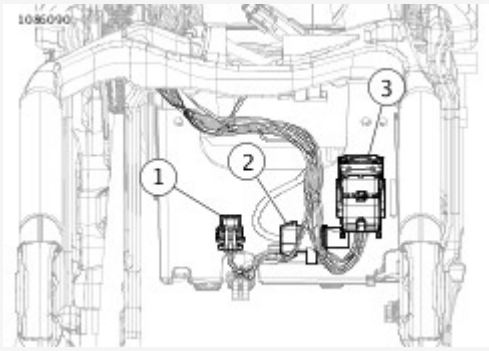

View interactive image

1	Security siren [142]
2	BCM power [259]
3	BCM [242]

Figure 3. Front of Rear Tire

Special Tools

Description	Part Number	Qty.
DIGITAL TECHNICIAN II	HD-48650	1

Electronic Control Module (ECM)

See Serial Data → CAN COMMUNICATION → Description and Operation → Behind Left Side Cover. The ECM is located under the left side cover. The ECM monitors the engine sensors to enhance performance and driveability. This is done by adjusting the fuel and spark delivery based on the information provided by the sensors.

IM

The IM contains part of the indicator and warning lamps for the motorcycle. It uses the CAN communication to receive information from the other modules to know which lamps to illuminate at any given time. Vehicle speed is also sent to the IM over the CAN bus. The LEDs in the indicator bar (if equipped) are directly wired to the IM. The IM turns the indicators on and off based off commands from the other modules over the CAN bus.

BCM

See Serial Data → CAN COMMUNICATION → Description and Operation → Front of Rear Tire. The BCM is located on the electrical panel behind the splash guard. The BCM supplies ignition and accessory power to most of the vehicle and controls the power mode of the electrical system. It controls the lighting along with other functions on the vehicle by using the switches as inputs and the power circuits for the lights as outputs. The BCM is also connected to the CAN bus and shares information with the other modules on the vehicle.

ABS ECU

See Serial Data → CAN COMMUNICATION → Description and Operation → Behind Right Side Cover. The ABS EHCU is located behind the right side cover. The ECU receives input from the front and rear WSS, and controls the HCU accordingly. The ABS ECU communicates over the CAN bus to the IM to control the ABS indicator.

Hand Control Modules

The left and right hand control modules control all the switches and controls on the handlebars. The engine stop switch has a redundant wire directly to the BCM. In the event of a communication malfunction, this redundant circuit is used to keep the engine from shutting off until the switch is turned off.

Data Link Connector (DLC)

The DLC is located under the left side cover. The DLC is used to connect the DIGITAL TECHNICIAN II (Part Number:HD-48650) to the motorcycle.

There are several DTCs that may set due to an issue with the CAN bus communication. Different DTCs are set by different modules. If a module loses communication with the rest of the system it will set DTC U0001, but the DTC cannot be retrieved until the CAN lines to that module are restored. If a module goes offline due to loss of PWR or GND or a loss of communication to that module, the module will not set a code, but the other modules will set DTCs indicating they are not able to communicate with it. When the IM recognizes a problem on the CAN bus it may display "BUS Err" on the odometer.

"VINERR" may also be displayed in the odometer if the IM and ECM are not seeing the same VIN in both modules. This will usually occur after replacing one of the two modules. The two modules must have the VINs match before they can share odometer mileage.

Both the ECM and IM retain the odometer value. If the IM is replaced, it will display the odometer value stored in the ECM. The replacement IM will become locked to the ECM after 50 km (31.1 mi) have been accumulated. The trip B odometer will display the countdown mileage. Once the countdown reaches zero, the IM is locked to the ECM. If installed on another vehicle, the odometer will display "VINERR". If the IM is removed from the vehicle before the countdown reaches zero, it has not been locked to the ECM. This mileage countdown allows for a road test to verify that IM replacement was the proper repair.

Diagnostic Tips

Modules must have power and be grounded in order to communicate. Therefore, when checking any communication DTC be sure to check the power and ground connections on the suspected module. BUS Err may show on the odometer if the following are present:

- CAN wires shorted together.
- CAN wire shorted to PWR or GND.
- CAN transceiver on some module failed shorted.
- Non-compliant module connected to the CAN bus.

Special Tools

Description	Part Number	Qty.
DIGITAL TECHNICIAN II	HD-48650	1

CAN communication uses a set of wires in a twisted pair. These two wires are designated as CAN low and CAN high circuits. Both circuits are connected to the ECM, BCM, instruments, both hand control modules and the ABS module (if equipped). The main harness and the right hand control module contain 120 ohm terminating resistors. Typical resistance between the two circuits is approximately 60 ohms.

- DTC U0001 indicates there is a fault on the CAN bus circuits. This code can be set by the ECM, BCM, instruments and ABS ECU (if equipped). This code is usually accompanied by other "U" codes, due to it causing a loss of communication between the modules on the CAN bus.
- DTC U0011 indicates the high and low CAN circuits are shorted together. This fault will be accompanied by other "U" codes and may cause the odometer display not to function.
- DTC B2274 indicates there is a fault with the battery fuse or the (R/O) wire.

NOTE

Always start from **Initial Diagnostics → Initial Diagnostics** before proceeding with this test.

Table 1. Code Description

DTC	DESCRIPTION
U0001	CAN bus error
U0011	CAN bus low shorted to CAN bus high
B2274	Constant battery line error

Diagnostic Tips

The IM does not have an ignition input. Instead, it receives a message over the CAN bus, indicating the IGN is ON. Also, the trip odometer reset switch is a CAN communication to the IM. Therefore, CAN bus errors can cause the odometer self-diagnostics to be completely inoperative or to only partially function. The IM backlighting may not function along with the hand control switches and the indicators. The odometer may read "BUS Err" in this condition, prior to the odometer becoming inoperative.

NOTE

If **DIGITAL TECHNICIAN II (Part Number:HD-48650)** is connected to the DLC [91] and communicating with the vehicle, then the odometer self-diagnostics will not function properly. Disconnect **DIGITAL TECHNICIAN II (Part Number:HD-48650)** before entering odometer self-diagnostics.

The BCM supplies power to several systems on the vehicle. When testing for a short to voltage, perform all tests before disconnecting the BCM to keep from powering down systems on the vehicle. If the short to voltage goes away when the BCM is disconnected, test for continuity between the circuit in question and BCM [242B] terminals F4, J3, L3, L4 and M2 to verify the tested circuit is not shorted to one of these circuits. If continuity is present, repair short to circuit instead of replacing the BCM.

Connector Information

For additional information about the connectors in the following diagram(s) and diagnostic procedure(s), see [Wiring → Wire Harness Connectors → General](#).

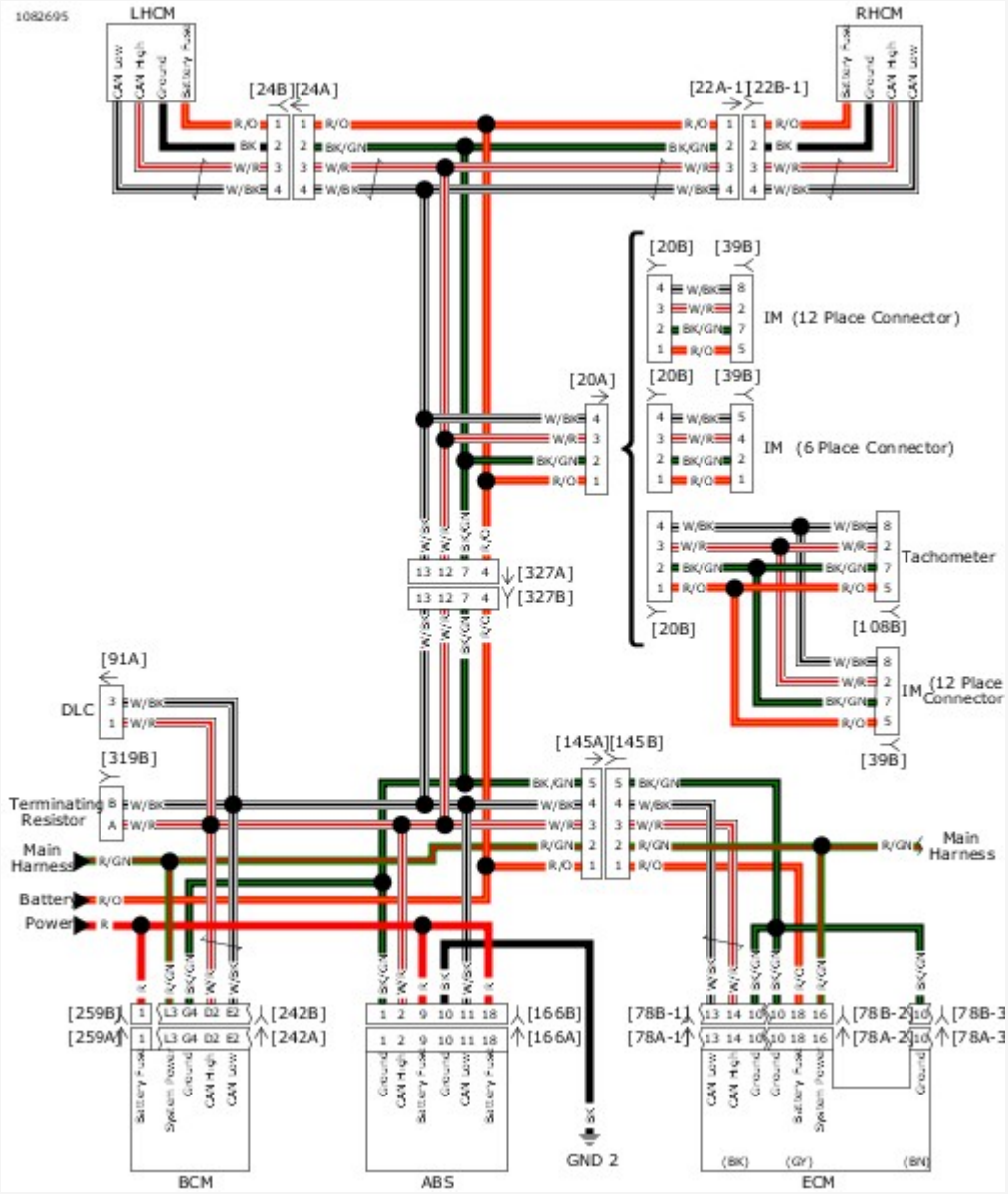

View interactive image

Figure 1. CAN Bus Circuit

Special Tools

Description	Part Number	Qty.
TEST CONNECTOR KIT	HD-41404	1
BREAKOUT BOX	HD-42682	1
BREAKOUT BOX ADAPTERS	HD-46601	1
BREAKOUT BOX	HD-50390-1	1
ABS OVERLAY	HD-50390-1-P1	1
BCM CABLE	HD-50390-2	1
BCM OVERLAY	HD-50390-2-P	1
ABS CABLE	HD-50390-6	1

Table 1. Odometer Self-Diagnostic Inoperative Diagnostic Faults: DTC U0001, U0011, B2274

POSSIBLE CAUSES
Short between CAN low and high circuits
Open in CAN high circuit
Open in CAN low circuit
Short to ground on CAN high circuit
Short to ground on CAN low circuit
Short to voltage on CAN high circuit
Short to voltage on CAN low circuit

1. CAN Bus Test

1. Turn IGN OFF.
2. Remove main fuse.
3. Using **TEST CONNECTOR KIT (Part Number:HD-41404)**, test resistance between DLC [91A] terminals 1 and 3.
4. Is resistance between 50-70 ohms?

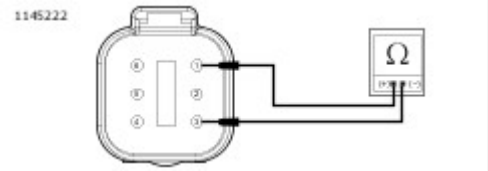

View interactive image

Figure 1.

a. **Yes.** Go to Test 15.
b. **No. Resistance less than 50 ohms.** Go to Test 2.
c. **No. Resistance greater than 70 ohms.** Go to Test 10.

2. IM Test

1. Disconnect IM [39].
2. See Figure 1. Is resistance between [91A] terminals 1 and 3 between 50-70 ohms?
   a. **Yes.** Replace IM.
   b. **No.** Go to Test 3.

3. BCM Test

1. Disconnect BCM [242].
2. See Figure 1. Is resistance between [91A] terminals 1 and 3 between 50-70 ohms?
   a. **Yes.** Replace BCM.
   b. **No, with ABS.** Go to Test 4.
   c. **No, without ABS.** Go to Test 5.

4. ABS Test

1. Disconnect ABS module [166].
2. See Figure 1. Is resistance between [91A] terminals 1 and 3 between 50-70 ohms?
   a. **Yes.** Replace ABS module.
   b. **No.** Go to Test 5.

5. LHCM Test

1. Disconnect LHCM [24].
2. See Figure 1. Is resistance between [91A] terminals 1 and 3 between 50-70 ohms?
   a. **Yes.** Replace LHCM.
   b. **No, with tachometer.** Go to Test 6.
   c. **No, without tachometer.** Go to Test 7.

6. Tachometer Test

1. Disconnect tachometer [108].
2. See Figure 1. Is resistance between [91A] terminals 1 and 3 between 50-70 ohms?
   a. **Yes.** Replace tachometer.
   b. **No.** Go to Test 7.

7. ECM Test

1. Disconnect ECM [78B-1].
2. Test resistance between [91A] terminals 1 and 3.

3. See Figure 1. Is resistance between 50-70 ohms?
    a. **Yes.** Replace ECM.
    b. **No.** Go to Test 8.

8. Terminating Resistor Test

1. Disconnect terminating resistor [319].
2. Test resistance between [91A] terminals 1 and 3.
3. See Figure 1. Is resistance between 110-130 ohms?
    a. **Yes.** Replace terminating resistor.
    b. **No.** Go to Test 9.

9. RHCM Test

1. Disconnect RHCM [22-1].
2. Test continuity between [91A] terminals 1 and 3.
3. See Figure 1. Is continuity present?
    a. **Yes.** Repair short between (W/R) and (W/BK) wires.
    b. **No.** Replace RHCM.

10. CAN Circuit Open Test

1. Watch the resistance between DLC [91A] terminals 1 and 3, disconnect terminating resistor [319].
2. See Figure 1. Did resistance change?
    a. **Yes.** Go to Test 11.
    b. **No.** Go to Test 13.

11. CAN High Circuit Resistance to RHCM Test

1. Disconnect RHCM [22-1].
2. Test resistance between [91A] terminal 1 (W/R) wire and [22A-1] terminal 3.
3. Is resistance greater than 0.5 ohm?

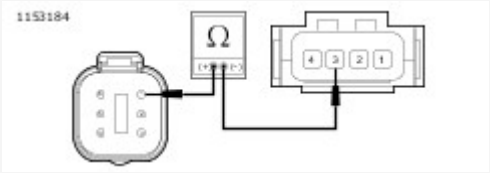

View interactive image

Figure 2.

    a. **Yes.** Repair (W/R) wire.
    b. **No.** Go to Test 12.

12. CAN Low Circuit Resistance to RHCM Test

1. Test resistance between [91A] terminal 3 (W/BK) wire and [22A-1] terminal 4.
2. Is resistance greater than 0.5 ohm?

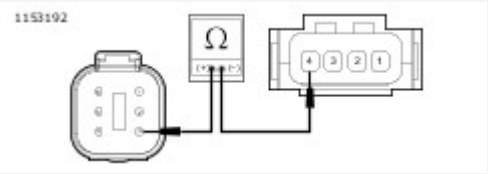

View interactive image

Figure 3.

a. **Yes.** Repair (W/BK) wire.
b. **No.** Replace RHCM.

13. CAN Low Circuit Resistance to Terminating Resistor Test

1. Test resistance between [91A] terminal 3 (W/BK) wire and [319B] terminal B.

NOTE

When measuring resistance (ohms), compensate for test lead resistance before performing the measurement. Select the ohms position and touch the test leads together. Refer to the multimeter user's manual to either zero the display or manually subtract the test lead resistance from the measured circuit's value.

2. Is resistance greater than 0.5 ohm?

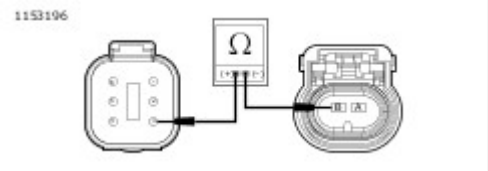

View interactive image

Figure 4.

a. **Yes.** Repair (W/BK) wire.
b. **No.** Go to Test 14.

14. CAN High Circuit Resistance to Terminating Resistor Test

1. Test resistance between [91A] terminal 1 (W/R) wire and [319B] terminal A.
2. Is resistance greater than 0.5 ohm?

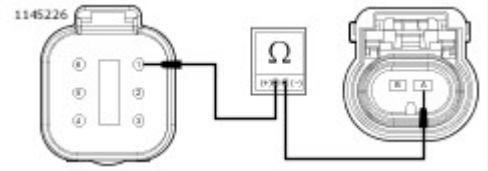

View interactive image

View interactive image

Figure 5.

a. **Yes.** Repair (W/R) wire.
b. **No.** Replace terminating resistor.

15. CAN High Circuit Short to Ground Test

1. Turn IGN OFF.
2. Test resistance between [91A] terminal 1 and ground.
3. Is resistance less than 1000 ohms?

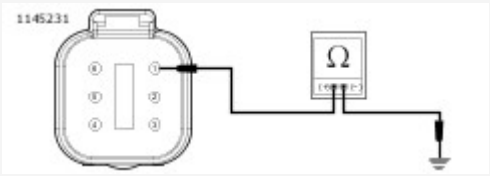

View interactive image

Figure 6.

a. **Yes.** Go to Test 16.
b. **No.** Go to Test 25.

16. IM Test

1. Disconnect IM [39].
2. See Figure 6. Is resistance between [91A] terminal 1 and ground less than 1000 ohms?
   a. **Yes.** Go to Test 17.
   b. **No.** Replace IM.

17. ECM Test

1. Disconnect ECM [78B-1].
2. See Figure 6. Is resistance between [91A] terminal 1 and ground less than 1000 ohms?
   a. **Yes.** Go to Test 18.
   b. **No.** Replace ECM.

18. Terminating Resistor Test

1. Disconnect terminating resistor [319].
2. See Figure 6. Is resistance between [91A] terminal 1 and ground less than 1000 ohms?
   a. **Yes.** Go to Test 19.
   b. **No.** Replace terminating resistor.

19. LHCM Test

1. Disconnect LHCM [24].
2. See Figure 6. Is resistance between [91A] terminal 1 and ground less than 1000 ohms?
    a. **Yes, with tachometer.** Go to Test 20.
    b. **Yes, without tachometer.** Go to Test 21.
    c. **No.** Replace LHCM.

20. Tachometer Test

1. Disconnect tachometer [108].
2. See Figure 6. Is resistance between [91A] terminals 1 and ground less than 1000 ohms?
    a. **Yes.** Go to Test 21.
    b. **No.** Replace tachometer.

21. BCM Test

1. Disconnect BCM [242].
2. See Figure 6. Is resistance between [91A] terminal 1 and ground less than 1000 ohms?
    a. **Yes, with ABS.** Go to Test 22.
    b. **Yes, without ABS.** Go to Test 23.
    c. **No.** Replace BCM.

22. ABS Test

1. Disconnect ABS module [166].
2. See Figure 6. Is resistance between [91A] terminal 1 and ground less than 1000 ohms?
    a. **Yes.** Go to Test 23.
    b. **No.** Replace ABS module.

23. RHCM Test

1. Disconnect RHCM [22-1].
2. See Figure 6. Is resistance between [91A] terminal 1 and ground less than 1000 ohms?
    a. **Yes.** Repair short to ground in (W/R) wire.
    b. **No.** Go to Test 24.

24. CAN Low Circuit Short to Ground Test

1. Test resistance between [91A] terminal 3 and ground.
2. Is resistance less than 1000 ohms?

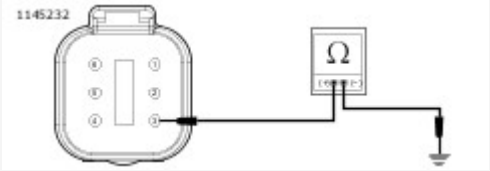

View interactive image

Figure 7.

a. **Yes.** Repair short to ground in (W/BK) wire.
b. **No.** Replace RHCM.

25. CAN High Circuit Short to Voltage Test

1. Install main fuse.
2. Turn IGN ON.
3. Test voltage between [91A] terminal 1 and ground.
4. Is voltage greater than 4V?

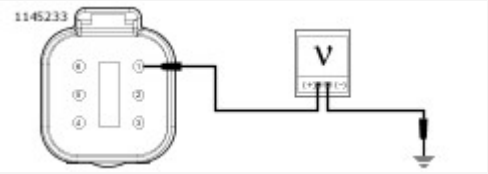

View interactive image

Figure 8.

a. **Yes.** Go to Test 26.
b. **No.** Go to Test 34.

26. IM Test

1. Turn IGN OFF.
2. Disconnect IM [39].
3. Turn IGN ON.
4. See Figure 8. Is voltage between [91A] terminal 1 and ground greater than 4V?
   a. **Yes.** Go to Test 27.
   b. **No.** Replace IM.

27. ECM Test

1. Turn IGN OFF.
2. Disconnect ECM [78B-1].
3. Turn IGN ON.
4. See Figure 8. Is voltage between [91A] terminal 1 and ground greater than 4V?
   a. **Yes.** Go to Test 28.
   b. **No.** Replace ECM.

28. LHCM Test

1. Turn IGN OFF.

2. Disconnect LHCM [24].
3. Turn IGN ON.
4. See Figure 8. Is voltage between [91A] terminal 1 and ground greater than 4V?
    a. **Yes, with ABS.** Go to Test 29.
    b. **Yes, without ABS.** Go to Test 30.
    c. **No.** Replace LHCM.

29. ABS Test

1. Turn IGN OFF.
2. Disconnect ABS module [166].
3. Turn IGN ON.
4. See Figure 8. Is voltage between [91A] terminal 1 and ground greater than 4V?
    a. **Yes.** Go to Test 30.
    b. **No.** Replace ABS module.

30. BCM Test

1. Turn IGN OFF.
2. Disconnect BCM power [259].
3. Disconnect BCM [242].
4. Turn IGN ON.
5. See Figure 8. Is voltage between [91A] terminal 1 and ground greater than 4V?
    a. **Yes, with tachometer.** Go to Test 31.
    b. **Yes, without tachometer.** Go to Test 32.
    c. **No.** Replace BCM. Refer to diagnostic tips.

31. Tachometer Test

1. Turn IGN OFF.
2. Disconnect tachometer [108].
3. Turn IGN ON.
4. See Figure 8. Is voltage between [91A] terminals 1 and ground greater than 4V?
    a. **Yes.** Go to Test 32.
    b. **No.** Replace tachometer.

32. RHCM Test

1. Turn IGN OFF.
2. Disconnect RHCM [22-1].
3. Turn IGN ON.
4. See Figure 8. Is voltage between [91A] terminal 1 and ground greater than 4V?
    a. **Yes.** Repair short to voltage in (W/R) wire.
    b. **No.** Go to Test 33.

33. CAN Low Circuit Short to Voltage Test

1. Test voltage between [91A] terminal 3 and ground.
2. Is voltage present?

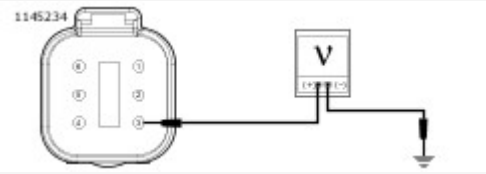

View interactive image

Figure 9.

a. **Yes.** Repair short to voltage in (W/BK) wire.
b. **No.** Replace RHCM.

34. CAN Low Circuit Resistance to BCM Test

1. Turn IGN OFF.
2. Disconnect BCM [242].
3. Connect **BREAKOUT BOX (Part Number:HD-50390-1)** and **BCM CABLE (Part Number:HD-50390-2)** to wiring harness [242B], leaving [242A] disconnected.
4. Verify **BCM OVERLAY (Part Number:HD-50390-2-P)** is in position on BOB.
5. Test resistance between [91A] terminal 3 (W/BK) wire and BOB terminal E2.
6. Is resistance greater than 0.5 ohm?

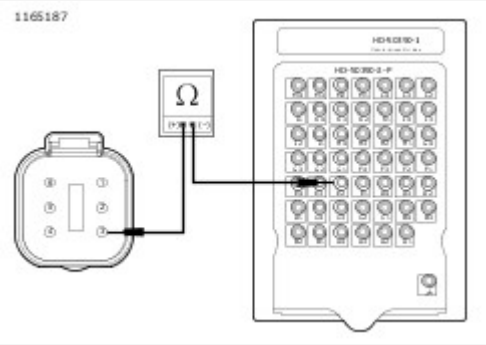

View interactive image

Figure 10.

a. **Yes.** Repair (W/BK) wire between [91A] terminal 3 and [242B] terminal E2.
b. **No.** **Go to Test 35.**

35. CAN High Circuit Resistance to BCM Test

1. Test resistance between [91A] terminal 1 (W/R) wire and BOB terminal D2.
2. Is resistance greater than 0.5 ohm?

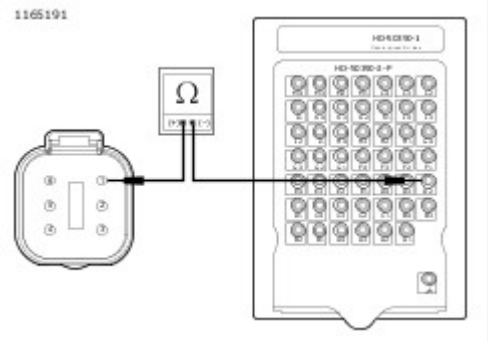

View interactive image

Figure 11.

a. **Yes.** Repair (W/R) wire between [91A] terminal 1 and [242B] terminal D2.
b. **No, with ABS.** Go to Test 36.
c. **No, without ABS.** Go to Test 38.
d. **No, without ABS or tachometer.** Go to Test 40.

36. CAN Low Circuit Resistance to ABS Module Test

1. Remove cables and BCM BOB.
2. Connect BCM.
3. Disconnect ABS [166].
4. Connect BREAKOUT BOX (Part Number:HD-50390-1) and ABS CABLE (Part Number:HD-50390-6) to wiring harness connector [166B], leaving [166A] disconnected.
5. Verify ABS OVERLAY (Part Number:HD-50390-1-P1) is in position on BOB.
6. Using TEST CONNECTOR KIT (Part Number:HD-41404), test resistance between [91A] terminal 3 (W/BK) wire and BOB terminal 11.
7. Is resistance greater than 0.5 ohm?

Figure 12.

a. **Yes.** Repair (W/BK) wire between [91A] terminal 3 and [166B] terminal 11.
b. **No.** Go to Test 37.

37. CAN High Circuit Resistance to ABS Module Test

1. Test resistance between [91A] terminal 1 (W/R) wire and BOB terminal 2.
2. Is resistance greater than 0.5 ohm?

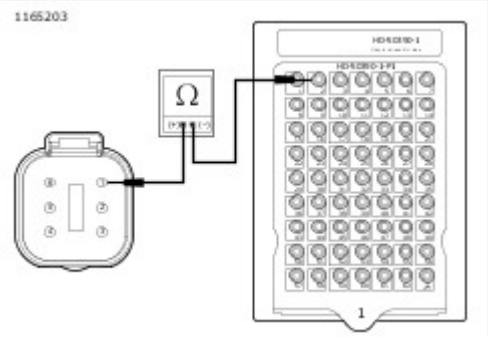

View interactive image

Figure 13.

a. **Yes.** Repair (W/R) wire between [91A] terminal 1 and [166B] terminal 2.
b. **No, with tachometer** Go to Test 38.
c. **No, without tachometer.** Go to Test 40.

38. CAN Low Circuit Resistance to Tachometer Test

1. Remove cables and ABS BOB. Connect ABS module.
2. Disconnect tachometer [108].
3. Connect BREAKOUT BOX (Part Number:HD-42682) and BREAKOUT BOX ADAPTERS (Part Number:HD-46601) to wiring harness connectors [108B]. Leaving [108A] disconnected, test resistance between [91A] terminal 3 (W/BK) wire and BOB terminal 8.
4. Is resistance greater than 0.5 ohm?

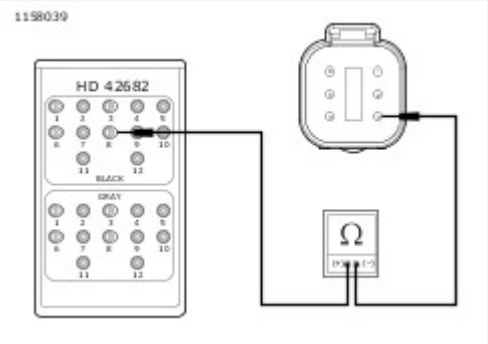

View interactive image

Figure 14.

a. **Yes.** Repair (W/BK) wire between [91A] terminal 3 and [108B] terminal 8.
b. **No.** Go to Test 39.

39. CAN High Circuit Resistance to Tachometer Test

1. Test resistance between [91A] terminal 1 (W/R) wire and BOB terminal 2.
2. Is resistance greater than 0.5 ohm?

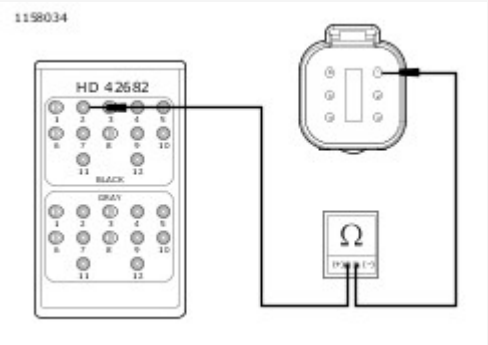

View interactive image

Figure 15.

a. **Yes.** Repair (W/R) wire between [91A] terminal 1 and [108B] terminal 2.
b. **No.** Go to Test 40.

40. IM Connector Test

1. Remove cables and ABS BOB, connect ABS module.
2. Remove tachometer BOB and connect tachometer.
3. Disconnect IM [39].
4. Inspect [39].
5. Is [39] a 12 place connector?
   a. **Yes.** Go to Test 42.
   b. **No.** Go to Test 41.

41. CAN Low Circuit IM Resistance Test

1. Using TEST CONNECTOR KIT (Part Number:HD-41404), test resistance between DLC [91A] terminal 3 and IM [39B] terminal 5.
2. Is resistance greater than 0.5 ohm?

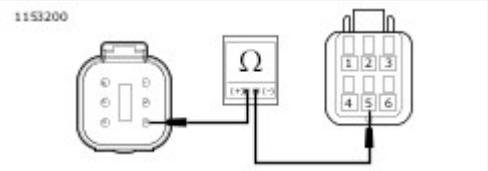

View interactive image

Figure 16.

a. **Yes.** Repair (W/BK) wire between [91A] terminal 3 and [39B] terminal 5.
b. **No.** Go to Test 44.

42. CAN Low Circuit Resistance to IM Test

1. Connect BREAKOUT BOX (Part Number:HD-42682) and BREAKOUT BOX ADAPTERS (Part Number:HD-46601) to wiring harness connectors [39B].
2. Leaving [39A] disconnected, test resistance between [91A] terminal 3 (W/BK) wire and BOB terminal 8.
3. Is resistance greater than 0.5 ohm?

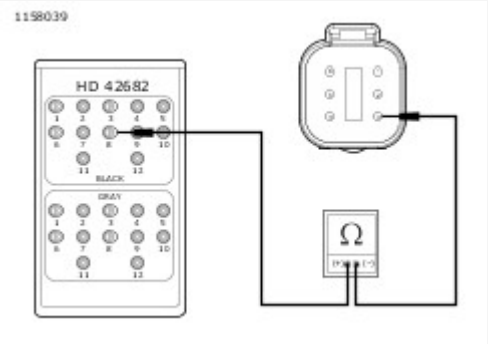

View interactive image

Figure 17.

a. **Yes.** Repair (W/BK) wire between [91A] terminal 3 and [39B] terminal 8.
b. **No.** [Go to Test 43.](#)

43. CAN High Circuit Resistance to IM Test

1. Test resistance between [91A] terminal 1 (W/R) wire and BOB terminal 2.
2. Is resistance greater than 0.5 ohm?

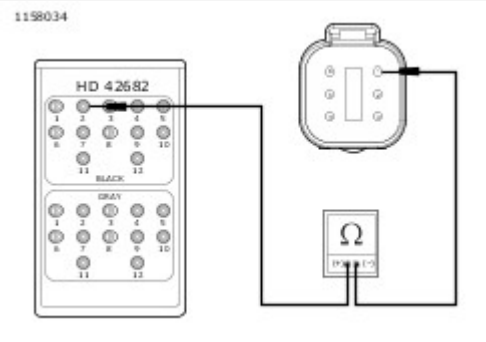

View interactive image

Figure 18.

a. **Yes.** Repair (W/R) wire between [91A] terminal 1 and [39B] terminal 2.
b. **No.** Concern is intermittent. Perform wiggle test and verify all connectors are properly connected. See [Initial Diagnostics → DIAGNOSTICS AND TROUBLESHOOTING → Wiggle Test](#).

44. CAN High Circuit IM Resistance Test

1. Test resistance between [91A] terminal 1 (W/R) wire and IM [39B] terminal 4.
2. Is resistance greater than 0.5 ohm?

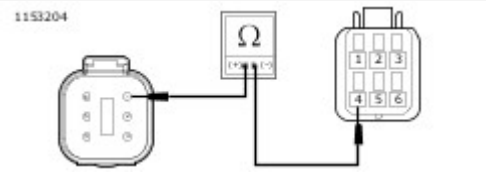

View interactive image

Figure 19.

a. **Yes.** Repair (W/R) wire between [91A] terminal 1 and [39B] terminal 4.
b. **No.** Concern is intermittent. Perform wiggle test and verify all connectors are properly connected. See [Initial Diagnostics → DIAGNOSTICS AND TROUBLESHOOTING → Wiggle Test](#).

Special Tools

Description	Part Number	Qty.
DIGITAL TECHNICIAN II	HD-48650	1

The CAN bus circuit provides a means for the ECM, IM, BCM, hand control modules and the ABS ECU (if equipped) to communicate their current status. When all operating parameters on the CAN bus are within specifications, a state of health message is sent between the components.

The CAN bus is made up of two circuits. The (W/R) is the CAN bus high circuit and the (W/BK) is the CAN bus low circuit. Both of these circuits show approximately 2.5V when measured between each of the circuits and ground with the IGN ON. These circuits are connected to each module on the CAN bus network. A fault on either one of these circuits will cause several modules to set "U" codes and may cause a complete loss of communication between all modules.

Table 1. Code Description

DTC	DESCRIPTION
U0100	Lost comm w/ECM
U0121	Lost comm w/ABS
U0140	Lost comm w/BCM
U0141	Lost comm w/LHCM
U0142	Lost comm w/RHCM
U0156	Lost comm w/speedo
U0300	Internal control module software incompatibility

Diagnostic Tips

Modules must have power in order to communicate on the CAN bus. It is important to check for good power and ground on any module that is not communicating effectively on the CAN bus network.

- At least two modules will set a DTC when one module loses the ability to communicate on the CAN bus.
- When two or more modules set the same U code it indicates a problem with the device or wiring at the device the codes are set against.
- Two or more modules setting the same U code intermittently indicates an intermittent problem with the device or wiring.

See **Initial Diagnostics → DIAGNOSTICS AND TROUBLESHOOTING → Wiggle Test** to test wiring to the component.

The BCM supplies power to several systems on the vehicle.

- When testing for a short to voltage, perform all tests before disconnecting the BCM to keep from powering down systems on the vehicle.
- If the short to voltage goes away when the BCM is disconnected, test for continuity between the circuit in question and BCM [242B] terminals F4, J3, L3, L4 and M2 to verify the tested circuit is not shorted to one of these circuits.
- If continuity is present, repair shorted circuit instead of replacing the BCM.

Historic U codes may be found if battery power has been lost for any reason or if the main or battery fuses have been disconnected and reconnected. This may also happen during diagnostics using **DIGITAL TECHNICIAN II (Part Number:HD-48650)**. The diagnostics connector has been disconnected before vehicle has been powered down. This is not an indication of a problem and does not cause any loss of functionality.

Connector Information

For additional information about the connectors in the following diagram(s) and diagnostic procedure(s), see [Wiring → Wire Harness Connectors → General](#).

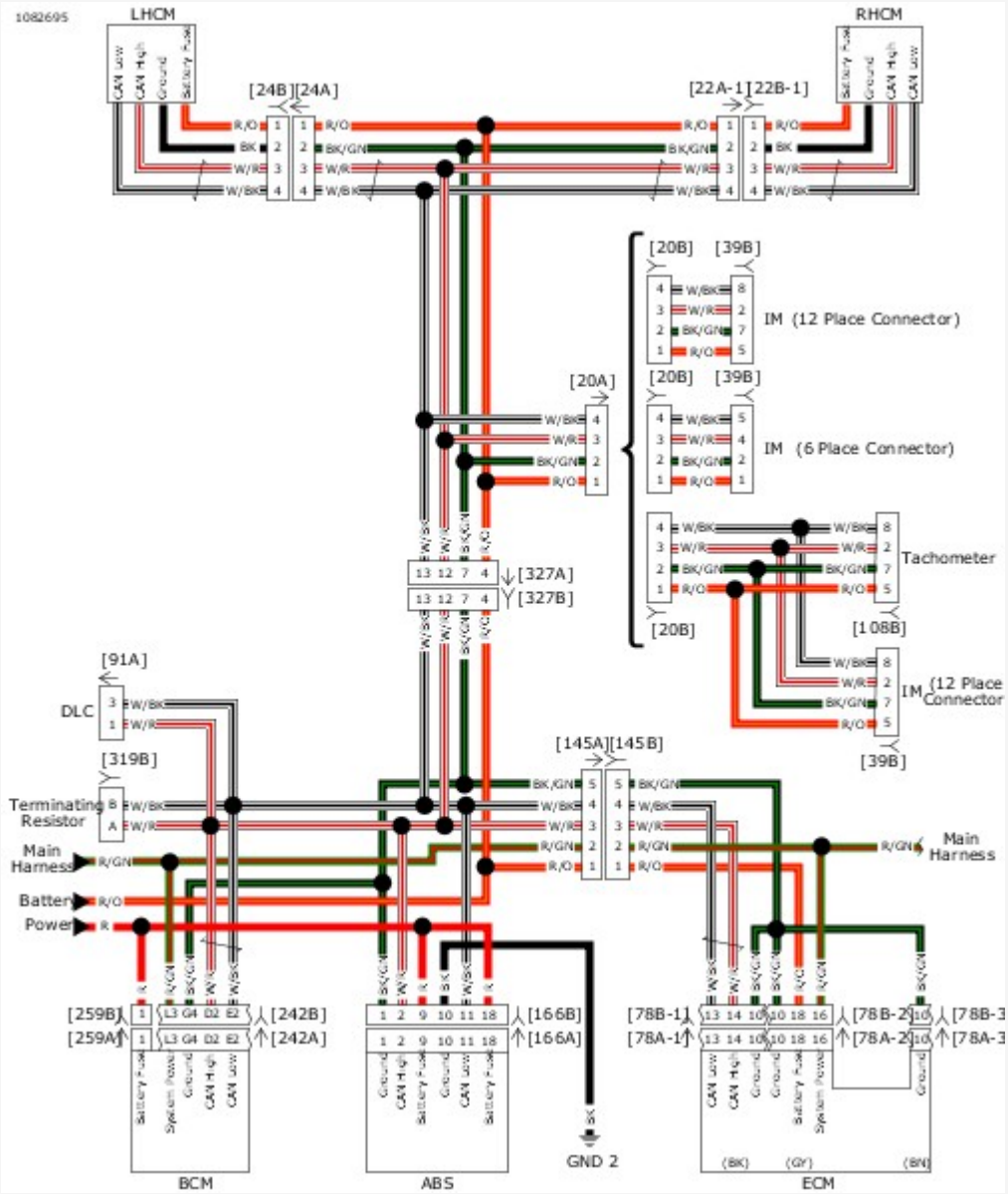

View interactive image

Figure 1. CAN Bus Circuit

Special Tools

Description	Part Number	Qty.
TEST CONNECTOR KIT	HD-41404	1
BREAKOUT BOX	HD-50390-1	1
ECM CABLE	HD-50390-4	1
ECM OVERLAY	HD-50390-4-P	1

Table 1. DTC U0100 Diagnostic Faults

POSSIBLE CAUSES
Open in CAN high circuit to the ECM
Open in CAN low circuit to the ECM
Open in ECM system power circuit
Open in ECM ground circuit

1. Module Test

1. View odometer.
2. Is only the BCM setting DTC?
    a. **Yes.** Go to Test 10.
    b. **No, ABS ECU only.** Go to Test 7.
    c. **No, IM only.** Go to Test 8.
    d. **No, tachometer only.** Go to Test 9.
    e. **No, multiple modules.** Go to Test 2.

2. System Power Test

1. Turn IGN OFF.
2. Connect BREAKOUT BOX (Part Number:HD-50390-1) and ECM CABLE (Part Number:HD-50390-4) to [78B-1], 78B-2] and [78B-3], leaving ECM [78A-1], [78A-2] and [78A-3] disconnected. See Initial Diagnostics → DIAGNOSTIC TOOLS.
3. Verify ECM OVERLAY (Part Number:HD-50390-4-P) is in position on BOB.
4. Turn IGN ON.
5. Using TEST CONNECTOR KIT (Part Number:HD-41404), test voltage between BOB [78-2] terminal 16 and ground.
6. Is battery voltage present?

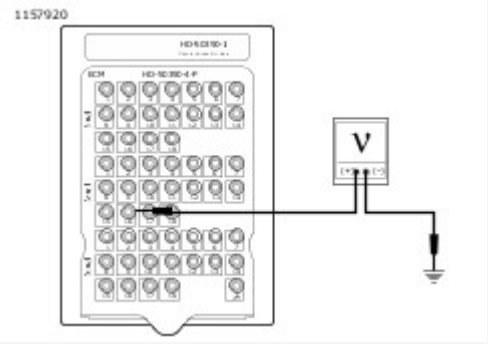

View interactive image

Figure 1.

a. **Yes.** Go to Test 3.
b. **No.** Go to Test 11.

3. ECM [78-1] Ground Test

1. Turn IGN OFF.
2. Test resistance between BOB [78-1] terminal 10 and ground.
3. Is resistance less than 0.5 ohm?

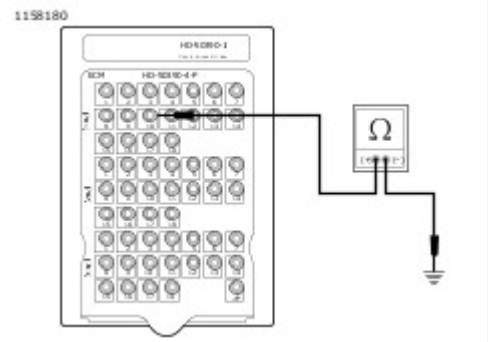

View interactive image

Figure 2.

a. **Yes.** Go to Test 4.
b. **No.** Repair open in (BK/GN) wire.

4. ECM [78-2] Ground Test

1. Test resistance between BOB [78-2] terminal 10 and ground.
2. Is resistance less than 0.5 ohm?

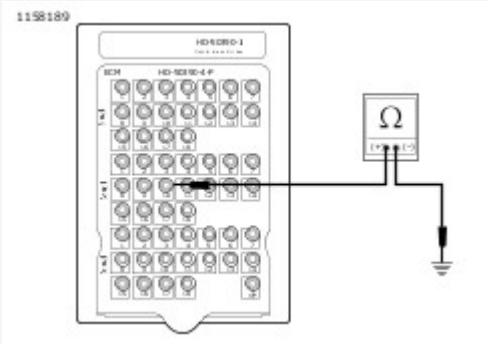

View interactive image

Figure 3.

a. **Yes.** [Go to Test 5.]
b. **No.** Repair open in (BK/GN) wire.

5. CAN High Circuit Continuity Test

1. Test resistance between BOB [78-1] terminal 14 and DLC [91A] terminal 1.
2. Is resistance less than 0.5 ohm?

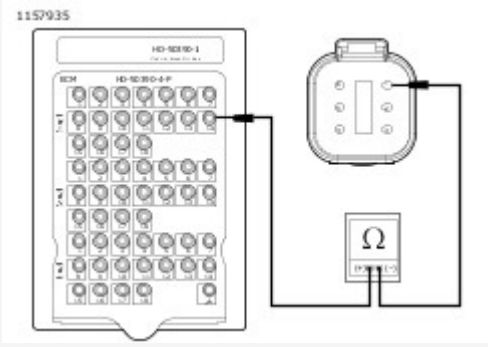

View interactive image

Figure 4.

a. **Yes.** [Go to Test 6.]
b. **No.** Repair open in (W/R) wire.

6. CAN Low Circuit Continuity Test

1. Test resistance between BOB [78-1] terminal 13 and [91A] terminal 3.
2. Is resistance less than 0.5 ohm?

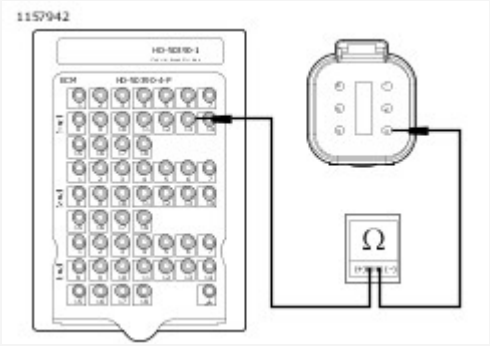

View interactive image

Figure 5.

a. **Yes.** Replace ECM.
b. **No.** Repair open in (W/BK) wire.

7. Verify ABS ECU Test

1. Turn IGN OFF.
2. Replace ABS ECU with a known good ABS ECU.
3. Turn IGN ON.
4. Attempt to start vehicle.
5. Check DTC.
6. Is DTC U0100 present?
   a. **Yes.** Check vehicle for any accessories connected to the CAN bus.
   b. **No.** Replace ABS ECU.

8. Verify IM Test

1. Turn IGN OFF.
2. Replace IM with a known good IM.
3. Turn IGN ON.
4. Attempt to start vehicle.
5. Check DTC.
6. Is DTC U0100 present?
   a. **Yes.** Check vehicle for any accessories connected to the CAN bus.
   b. **No.** Replace IM.

9. Verify Tachometer Test

1. Turn IGN OFF.
2. Replace tachometer with a known good tachometer.
3. Turn IGN ON.
4. Attempt to start vehicle.
5. Check DTC.
6. Is DTC U0100 present?
   a. **Yes.** Check vehicle for any accessories connected to the CAN bus.
   b. **No.** Replace tachometer.

10. Verify BCM Test

1. Replace BCM with a known good BCM.
2. Turn IGN ON.
3. Attempt to start vehicle.
4. Check DTC.
5. Is DTC U0100 present?
    a. **Yes.** Check vehicle for any accessories connected to the CAN bus.
    b. **No.** Replace BCM.

11. System Power DTC Test

1. Remove BOB.
2. Connect [78A-1], [78A-2] and [78A-3].
3. Verify DTCs.
4. Is B2102, B2103 or B2104 setting?
    a. **Yes.** See **Engine Management → SYSTEM POWER CIRCUIT DIAGNOSTICS**.
    b. **No.** Repair open in (R/GN) wire.

Special Tools

Description	Part Number	Qty.
TEST CONNECTOR KIT	HD-41404	1
BREAKOUT BOX	HD-50390-1	1
ABS OVERLAY	HD-50390-1-P1	1
ABS CABLE	HD-50390-6	1

Table 1. DTC U0121 Diagnostic Faults

POSSIBLE CAUSES
Open in CAN high circuit to the ABS ECU
Open in CAN low circuit to the ABS ECU
Open in ABS system power circuit
Open in ABS ground circuit

1. ABS Voltage Test

1. Turn IGN OFF.
2. Connect **BREAKOUT BOX (Part Number:HD-50390-1)**and **ABS CABLE (Part Number:HD-50390-6)** to wiring harness [166B], leaving [166A] disconnected. See **Initial Diagnostics → DIAGNOSTIC TOOLS**.
3. Verify **ABS OVERLAY (Part Number:HD-50390-1-P1)** is in position on BOB.
4. Using **TEST CONNECTOR KIT (Part Number:HD-41404)**, test voltage between BOB terminal 18 and ground.
5. Test voltage between BOB terminal 9 and ground.
6. Is battery voltage present at both?

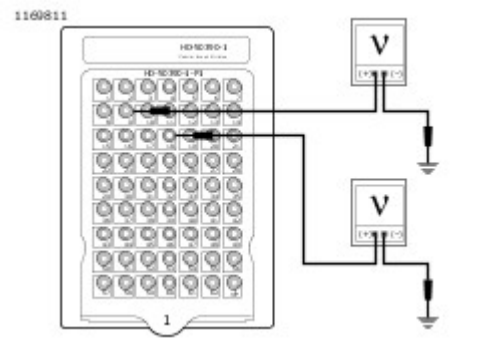

View interactive image

Figure 1.

a. **Yes.** **Go to Test 2.**
b. **No.** Repair open in (R) wire.

2. ABS Ground Test

1. Test voltage between BOB terminals 18 and 10.
2. Is battery voltage present?

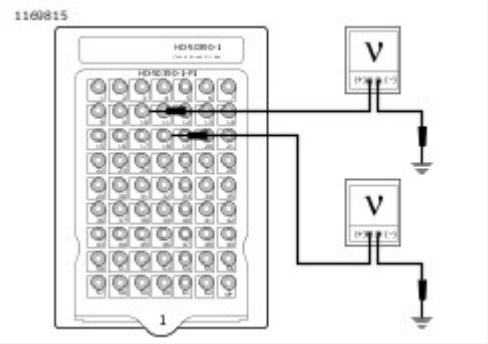

View interactive image

Figure 2.

a. **Yes.** Go to Test 3.
b. **No.** Repair open in (BK) wire.

3. CAN High Circuit Continuity Test

1. Turn IGN OFF.
2. Test resistance between BOB terminal 2 and DLC [91A] terminal 1.
3. Is resistance less than 0.5 ohm?

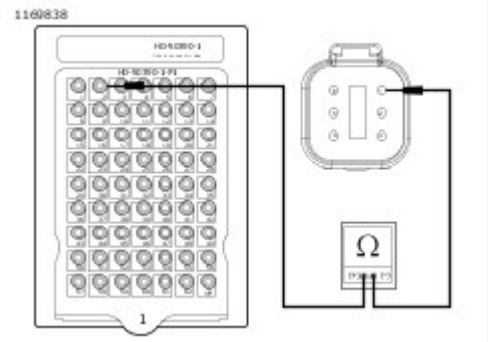

View interactive image

Figure 3.

a. **Yes.** Go to Test 4.
b. **No.** Repair open in (W/R) wire.

4. CAN Low Circuit Continuity Test

1. Test resistance between BOB terminal 11 and [91A] terminal 3.
2. Is resistance less than 0.5 ohm?

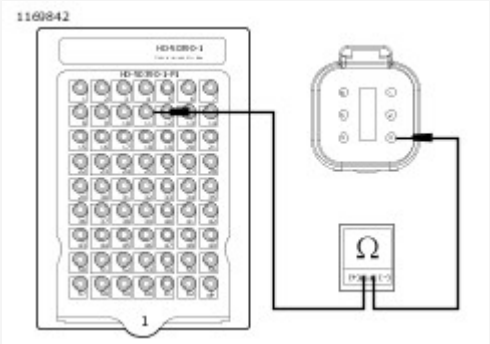

View interactive image

Figure 4.

a. **Yes.** Replace ABS ECU.
b. **No.** Repair open in (W/BK) wire.

Special Tools

Description	Part Number	Qty.
TEST CONNECTOR KIT	HD-41404	1
BCM CABLE	HD-50390-2	1
BCM OVERLAY	HD-50390-2-P	1

Table 1. No Vehicle Power Diagnostic Faults: DTC U0140

POSSIBLE CAUSES
Open in CAN high circuit to the BCM
Open in CAN low circuit to the BCM
Open in ignition switch circuit
Short to ground in ignition switch circuit
Short to voltage in ignition switch circuit
Ignition switch malfunction
Open in BCM battery power circuit
Open in BCM ground circuit

1. BCM Ground Test

1. Turn IGN OFF.
2. Connect **BCM OVERLAY (Part Number:HD-50390-2-P)** and **BCM CABLE (Part Number:HD-50390-2)** to wire harness [242B], leaving BCM [242A] disconnected.
3. Verify **BCM OVERLAY (Part Number:HD-50390-2-P)** is in position on BOB.
4. Disconnect BCM [259].
5. Using **TEST CONNECTOR KIT (Part Number:HD-41404)**, test voltage between BCM [259B] terminal 1 and BOB terminal G4.
6. Is battery voltage present?

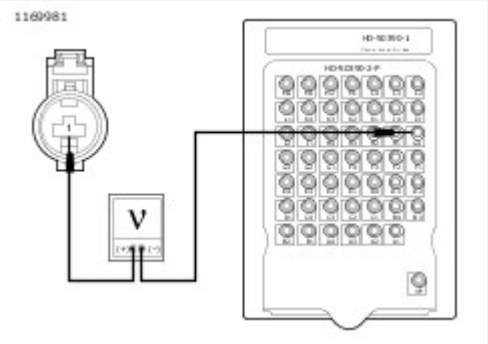

View interactive image

Figure 1.

a. **Yes.** Go to Test 2.
b. **No.** Go to Test 11.

2. CAN High Circuit Continuity Test

1. Disconnect RHCM [22A-1].
2. Test resistance between BOB terminal D2 and [22A-1] terminal 3.
3. Is resistance less than 0.5 ohm?

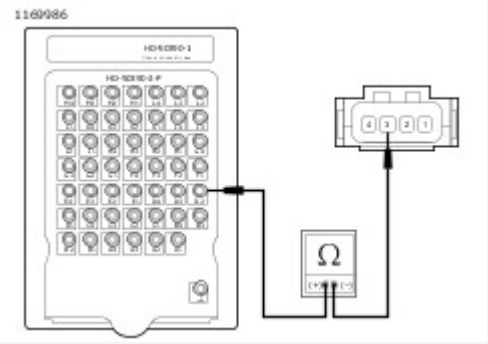

View interactive image

Figure 2.

a. **Yes.** Go to Test 3.
b. **No.** Repair open in (W/R) wire.

3. CAN High Circuit Short to Ground Test

1. Test continuity between BOB terminal D2 and ground.
2. Is continuity present?

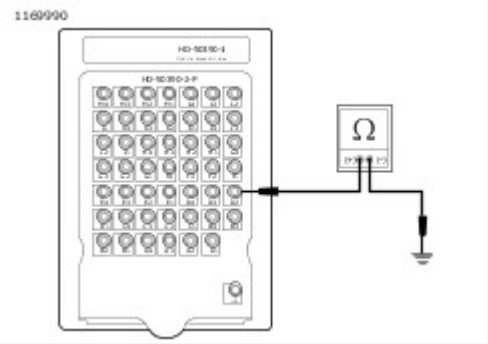

View interactive image

Figure 3.

a. **Yes.** Repair short to ground in (W/R) wire.
b. **No.** Go to Test 4.

4. CAN High Circuit Short to Voltage Test

1. Connect [259].
2. Connect [242A].
3. Turn IGN ON.
4. Test voltage between BOB terminal D2 and ground.
5. Is battery voltage present?

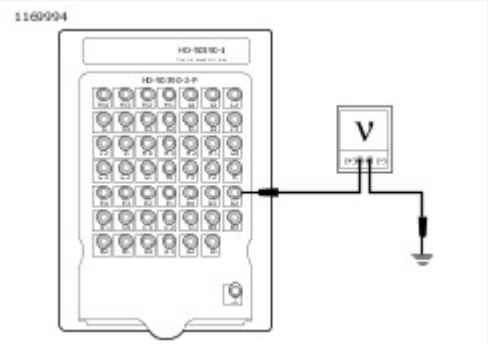

View interactive image

Figure 4.

a. **Yes.** Repair short to voltage in (W/R) wire.
b. **No.** Go to Test 5.

5. CAN Low Circuit Continuity Test

1. Turn IGN OFF.
2. Test resistance between BOB terminal E2 and [22A-1] terminal 4.
3. Is resistance less than 0.5 ohm?

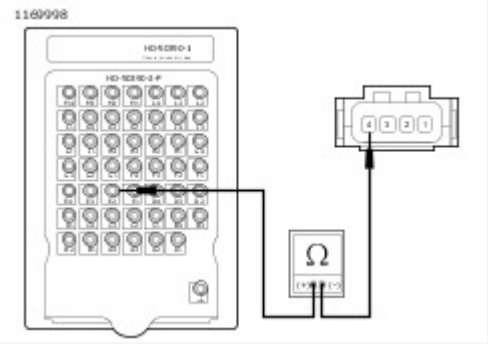

View interactive image

Figure 5.

a. **Yes.** Go to Test 6.
b. **No.** Repair open in (W/BK) wire.

6. CAN Low Circuit Short to Ground Test

1. Test continuity between BOB terminal E2 and ground.

2. Is continuity present?

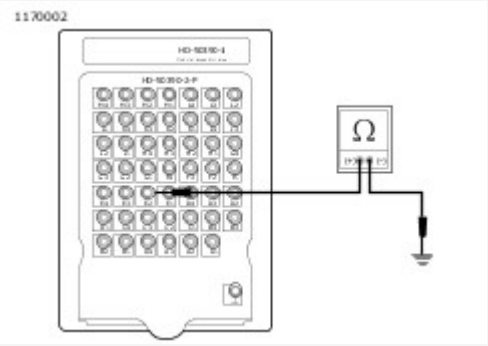

View interactive image

Figure 6.

a. **Yes.** Repair short to ground in (W/BK) wire.
b. **No.** Go to Test 7.

7. CAN Low Circuit Short to Voltage Test

1. Turn IGN ON.
2. Test voltage between BOB terminal E2 and ground.
3. Is battery voltage present?

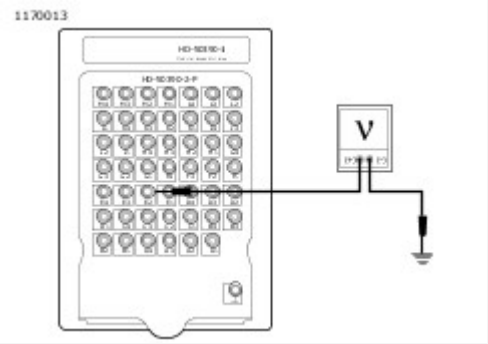

View interactive image

Figure 7.

a. **Yes.** Repair short to voltage in (W/BK) wire.
b. **No.** Go to Test 8.

8. RHCM Power Test

1. Test voltage between [22A-1] terminals 1 and 2.
2. Is battery voltage present?

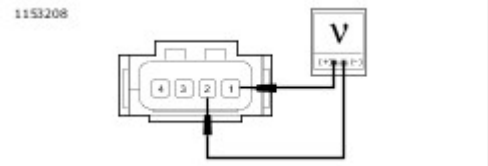

View interactive image

Figure 8.

a. **Yes.** Go to Test 10.
b. **No.** Go to Test 9.

9. RHCM Ground Test

1. Test voltage between [22A-1] terminal 1 and ground.
2. Is battery voltage present?

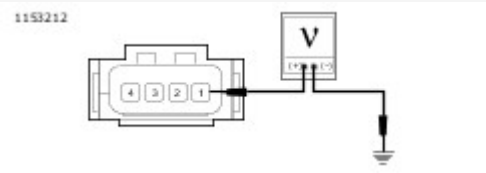

View interactive image

Figure 9.

a. **Yes.** Repair open in (BK/GN) wire.
b. **No.** Repair open in (R/O) wire.

10. RHCM Test

1. Turn IGN OFF.
2. Remove main fuse [5].
3. Replace RHCM with a known good RHCM without installing it on the vehicle.
4. Install main fuse.
5. Push engine stop switch to RUN.
6. Turn IGN ON.
7. Does vehicle power up?
   a. **Yes.** Replace RHCM.
   b. **No.** Replace BCM.

11. BCM Voltage Test

1. Test voltage between [259B] terminal 1 and ground.
2. Is battery voltage present?

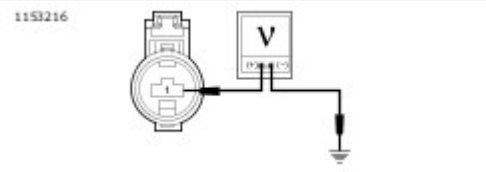

View interactive image

Figure 10.

a. **Yes.** Repair open in (BK/GN) wire.
b. **No.** Repair open in (R) wire.

Special Tools

Description	Part Number	Qty.
TEST CONNECTOR KIT	HD-41404	1

Table 1. Left Hand Controls Inoperative, DTC U0141 Diagnostic Faults

POSSIBLE CAUSES
Open in CAN high circuit to the LHCM
Open in CAN low circuit to the LHCM
Open in LHCM battery power circuit
Open in LHCM ground circuit

1. LHCM Voltage Test

1. Turn IGN OFF.
2. Disconnect LHCM [24A].
3. Using **TEST CONNECTOR KIT (Part Number:HD-41404)**, test voltage between [24A] terminal 1 and ground.
4. Is battery voltage present?

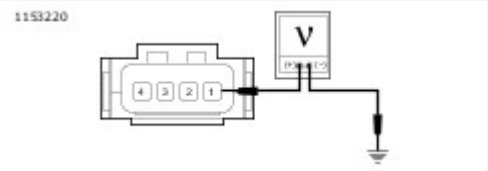

View interactive image

Figure 1.

a. **Yes.** **Go to Test 2.**
b. **No.** Repair open in (R/O) wire.

2. LHCM Test

1. Test voltage between [24A] terminals 1 and 2.
2. Is battery voltage present?

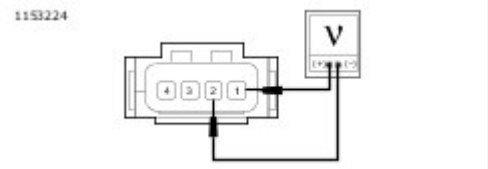

View interactive image

Figure 2.

a. **Yes.** Go to Test 3.
b. **No.** Repair open in (BK/GN) wire.

3. CAN High Circuit Continuity Test

1. Test resistance between [24A] terminal 3 and DLC [91A] terminal 1.
2. Is resistance less than 0.5 ohm?

Figure 3.

a. **Yes.** Go to Test 4.
b. **No.** Repair open in (W/R) wire.

4. CAN Low Circuit Continuity Test

1. Test resistance between [24A] terminal 4 and [91A] terminal 3.
2. Is resistance less than 0.5 ohm?

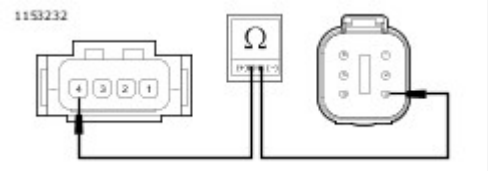

View interactive image

Figure 4.

a. **Yes.** Replace LHCM.
b. **No.** Repair open in (W/BK) wire.

Special Tools

Description	Part Number	Qty.
TEST CONNECTOR KIT	HD-41404	1

Table 1. DTC U0142 Diagnostic Faults

POSSIBLE CAUSES
Open in CAN high circuit to the RHCM
Open in CAN low circuit to the RHCM
Open in RHCM battery power circuit
Open in RHCM ground circuit

1. RHCM Voltage Test

1. Turn IGN OFF.
2. Disconnect RHCM [22A-1].
3. Using **TEST CONNECTOR KIT (Part Number:HD-41404)**, test voltage between [22A-1] terminal 1 and ground.
4. Is battery voltage present?

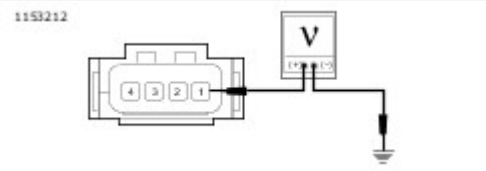

View interactive image

Figure 1.

a. **Yes.** **Go to Test 2.**
b. **No.** Repair open in (R/O) wire.

2. RHCM Test

1. Test voltage between [22A-1] terminals 1 and 2.
2. Is battery voltage present?

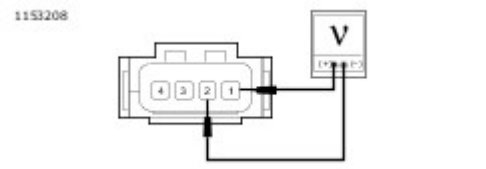

View interactive image

Figure 2.

a. **Yes.** Go to Test 3.
b. **No.** Repair open in (BK/GN) wire.

3. CAN High Circuit Continuity Test

1. Test resistance between [22A-1] terminal 3 and DLC [91A] terminal 1.
2. Is resistance less than 0.5 ohm?

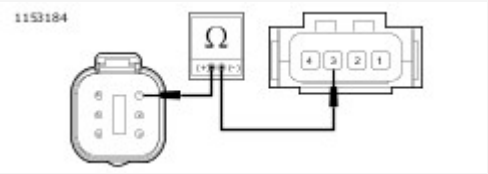

View interactive image

Figure 3.

a. **Yes.** Go to Test 4.
b. **No.** Repair open in (W/R) wire.

4. CAN Low Circuit Continuity Test

1. Test resistance between [22A-1] terminal 4 and [91A] terminal 3.
2. Is resistance less than 0.5 ohm?

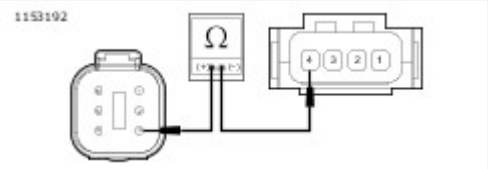

View interactive image

Figure 4.

a. **Yes.** Replace RHCM.
b. **No.** Repair open in (W/BK) wire.

Special Tools

Description	Part Number	Qty.
TEST CONNECTOR KIT	HD-41404	1

Table 1. IM Inoperative: DTC U0156 Diagnostic Faults

POSSIBLE CAUSES
Open in CAN high circuit to the IM
Open in CAN low circuit to the IM
Open in IM battery power circuit
Open in IM ground circuit

1. IM Voltage Test

1. Turn IGN OFF.
2. Using **TEST CONNECTOR KIT (Part Number:HD-41404)**, test voltage between [20A] terminal 1 and ground.
3. Is battery voltage present?

Figure 1.

a. **Yes.** **Go to Test 2.**
b. **No.** Repair open in (R/O) wire.

2. IM Ground Test

1. Test voltage between [20A] terminals 1 and 2.
2. Is battery voltage present?

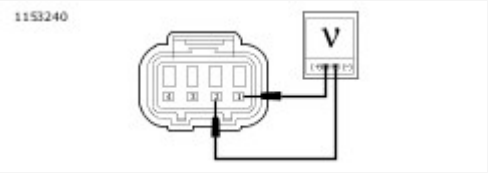

View interactive image

Figure 2.

a. **Yes.** **Go to Test 3.**
b. **No.** Repair open in (BK/GN) wire.

3. CAN High Circuit Continuity Test

1. Test resistance between [20A] terminal 3 and DLC [91A] terminal 1.
2. Is resistance less than 0.5 ohm?

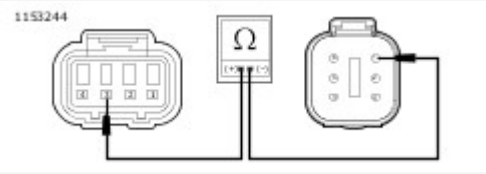

View interactive image

Figure 3.

a. **Yes.** Go to Test 4.
b. **No.** Repair open in (W/R) wire.

4. CAN Low Circuit Continuity Test

1. Test resistance between [20A] terminal 4 and [91A] terminal 3.
2. Is resistance less than 0.5 ohm?

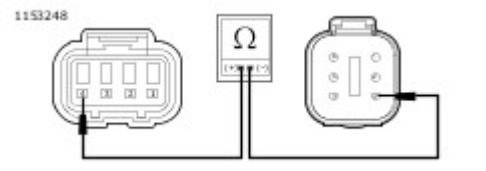

View interactive image

Figure 4.

a. **Yes.** Replace IM.
b. **No.** Repair open in (W/BK) wire.

Special Tools

Description	Part Number	Qty.
TEST CONNECTOR KIT	HD-41404	1
BREAKOUT BOX	HD-42682	1
BREAKOUT BOX ADAPTERS	HD-46601	1

Table 1. Tachometer Inoperative: DTC U0157 Diagnostic Faults

POSSIBLE CAUSES
Open in CAN high circuit to the tachometer
Open in CAN low circuit to the tachometer
Open in tachometer battery power circuit
Open in tachometer ground circuit

1. Tachometer Voltage Test

1. Turn IGN OFF.
2. Connect BREAKOUT BOX (Part Number:HD-42682) and BREAKOUT BOX ADAPTERS (Part Number:HD-46601) to the wiring harness [108B], leaving the [108A] disconnected.
3. Using TEST CONNECTOR KIT (Part Number:HD-41404), test voltage between BOB terminal 5 and ground.
4. Is battery voltage present?

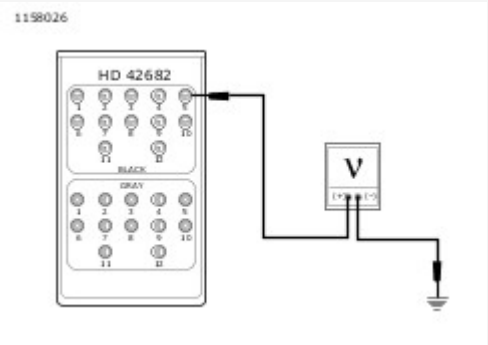

View interactive image

Figure 1.

a. **Yes.** Go to Test 2.
b. **No.** Repair open in (R/O) wire.

2. Tachometer Ground Test

1. Test voltage between BOB terminals 5 and 7.

2. Is battery voltage present?

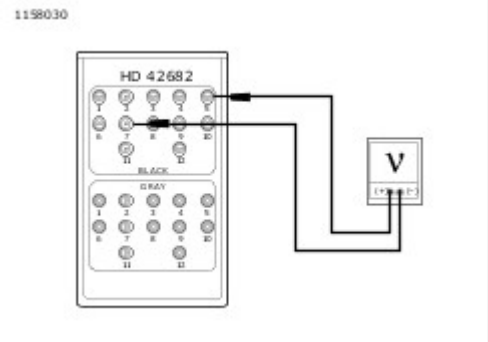

View interactive image

Figure 2.

a. **Yes.** Go to Test 3.
b. **No.** Repair open in (BK/GN) wire.

3. CAN High Circuit Continuity Test

1. Test resistance between BOB terminal 2 and DLC [91A] terminal 1.
2. Is resistance less than 0.5 ohm?

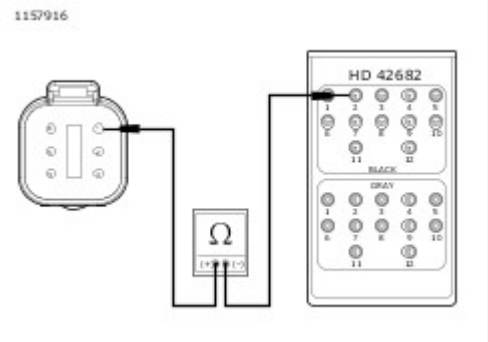

View interactive image

Figure 3.

a. **Yes.** Go to Test 4.
b. **No.** Repair open in (W/R) wire.

4. CAN Low Circuit Continuity Test

1. Test resistance between BOB terminal 8 and [91A] terminal 3.
2. Is resistance less than 0.5 ohm?

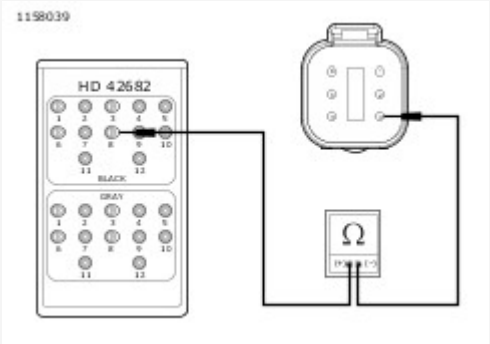

View interactive image

Figure 4.

a. **Yes.** Replace the tachometer.
b. **No.** Repair open in (W/BK) wire.

Special Tools

Description	Part Number	Qty.
DIGITAL TECHNICIAN II	HD-48650	1

Table 1. DTC U0300 Diagnostic Faults

POSSIBLE CAUSES
ECM software error

1. Verify DTC

1. Clear DTC.
2. Turn IGN OFF for 30 seconds.
3. Check DTCs.
4. Did DTC reset?
    a. **Yes.** Go to Test 2.
    b. **No.** System working properly.

2. Reflash ECM

1. Using DIGITAL TECHNICIAN II (Part Number:HD-48650) reflash ECM.
2. Clear DTCs.
3. Turn IGN OFF for 30 seconds.
4. Check DTCs.
5. Did DTC reset?
    a. **Yes.** Replace ECM.
    b. **No.** System working properly.

Test battery condition by using a voltage, charging or load test.

Always fully charge battery prior to load testing.

NOTE

An automatic, constant monitoring battery charger/tender with a charging rate of 5 amps or less at less than 14.6V is recommended. The use of constant current chargers (including trickle chargers) to charge sealed AGM batteries is not recommended. Any overcharge will cause dry-out and premature battery failure.

The voltmeter test provides a general indication of battery state of charge or condition. Check the voltage of the battery to verify that it is in a 100% fully charged condition. Refer to **Table 1**.

- If the open circuit (disconnected) voltage reading is below 12.6V, charge battery and then check voltage after battery has set for 1-2 hours.
- If voltage reading is 12.7V or above, perform a load test. See **Starting and Charging → BATTERY TESTING → Load Test**.

Table 1. Voltmeter Test For Battery Charge Conditions

VOLTAGE	STATE OF CHARGE
12.7	100%
12.6	75%
12.3	50%
12.0	25%
11.8	0%

Special Tools

Description	Part Number	Qty.
HD BATTERY DIAGNOSTIC STATION	GRX-3110HD	1

Test battery using the **HD BATTERY DIAGNOSTIC STATION (Part Number:GRX-3110HD)**.

WARNING

Disconnect negative (-) battery cable first. If positive (+) cable should contact ground with negative (-) cable connected, the resulting sparks can cause a battery explosion, which could result in death or serious injury. (00049a)

1. Disconnect and remove battery.
2. Read GRX instruction manual before performing a battery test.
3. Connect **HD BATTERY DIAGNOSTIC STATION (Part Number:GRX-3110HD)** leads to the battery terminals.
4. Test results will include a decision on battery condition and measured state of charge. See **Figure 1**. The GRX printer will provide a printout including test results:
    a. GOOD BATTERY - Return battery to service.
    b. REPLACE BATTERY - Replace battery.

View interactive image

Figure 1. Battery Test Results Printout (Typical)

WARNING

Disconnect negative (-) battery cable first. If positive (+) cable should contact ground with negative (-) cable connected, the resulting sparks can cause a battery explosion, which could result in death or serious injury. (00049a)

1. With vehicle battery on a bench, charge battery using an automatic, constant monitoring battery charger approved for AGM batteries.

NOTE

Always fully charge battery before testing or test readings will be incorrect. Load testing a discharged battery can also result in permanent battery damage.

WARNING

Turn battery load tester OFF before connecting tester cables to battery terminals. Connecting tester cables with load tester ON can cause a spark and battery explosion, which could result in death or serious injury. (00252a)

2. See Figure 1. Connect tester leads to battery posts and place induction pickup over negative (black) cable.

NOTE

To avoid load tester and/or battery damage, do not leave load tester switch turned ON for more than 20 seconds.

WARNING

Turn battery load tester OFF before disconnecting tester cables to battery terminals. Disconnecting tester cables with load tester ON can cause a spark and battery explosion, which could result in death or serious injury. (00253a)

WARNING

Connect positive (+) battery cable first. If positive (+) cable should contact ground with negative (-) cable connected, the resulting sparks can cause a battery explosion, which could result in death or serious injury. (00068a)

NOTICE

Do not over-tighten bolts on battery terminals. Use

recommended torque values. Over-tightening battery terminal bolts could result in damage to battery terminals. (00216a)

3. Load battery at 50 percent of CCA rating using load tester. Voltage reading after 15 seconds should be 9.6V or more at 21 °C (70 °F). Refer to **Table 1**.

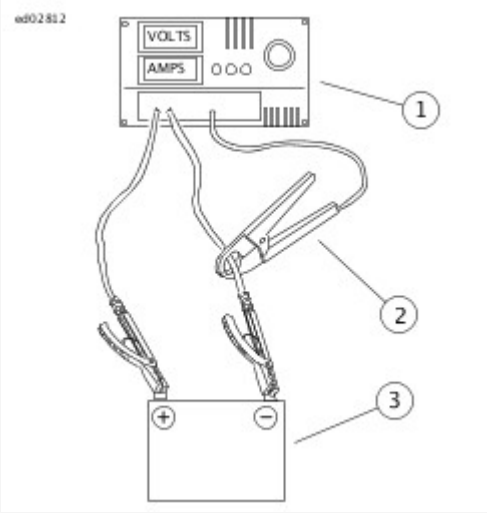

View interactive image

1	Load tester
2	Induction pickup
3	Battery

Figure 1. Load Test Battery

Table 1. Battery Load Test

COLD CRANKING AMPERAGE (CCA)	100%	50%
Softail models	315	155

Battery voltage is supplied to the BCM at all times through the main fuse. The engine stop switch also functions as the ignition switch.

When the engine stop switch is in the RUN position, a CAN message is sent, signaling the BCM that the switch is in the RUN position. If CAN communication is interrupted while the engine is running, the BCM checks for the signal from the redundant engine stop switch circuit.

When the start switch is pressed, a CAN message is sent to the BCM. The BCM provides power to the starter solenoid. This energizes the solenoid and full battery power is sent to the starter. The BCM disables the starter solenoid if the start switch is pressed for more than 10 seconds.

Starter

The starter receives power from the battery through the starter solenoid and is grounded through the starter case. When the starter solenoid is energized, two events happen:

- The plunger pulls inward which allows current to flow to the starter motor.
- The pinion gear engages with the ring gear on the clutch shell.

With the starter motor turning, the rotation is transferred:

- The starter armature gear transfers rotation to the idler gear.
- The idler gear transfers rotation to the starter clutch.
- The starter clutch transfers rotation through a spline gear to the starter drive shaft which also drives the pinion gear.
- The pinion gear transfers its rotation to the ring gear on the clutch shell.
- The primary chain drives the alternator rotor sprocket on the end of the crankshaft.

The starter clutch has a one-way clutch. When the engine starts, it allows the clutch shell and sprocket to spin freely without causing any damage to the starter motor. After the engine starts and the start switch is released, the plunger returns to its normal position, disengaging the pinion gear from the clutch shell and sprocket.

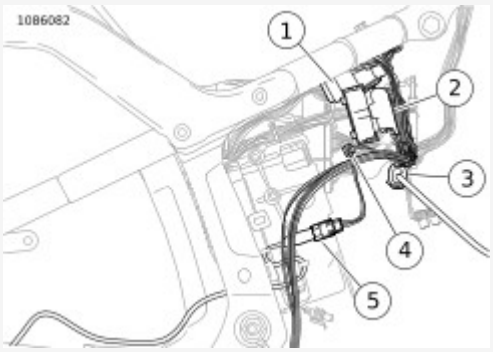

View interactive image

1	Engine harness [145]
2	ABS EHCU [166]
3	Rear HO2S [137]
4	Starter solenoid [128]
5	Rear WSS [168]

Figure 1. Behind Right Side Cover

Starter Solenoid

See Figure 1. The starter solenoid provides power to the starter. The solenoid is a means of controlling a high amperage device with a low amperage switch. The low amperage switch in this circuit is the BCM. The BCM sends voltage to the starter solenoid making a magnetic field that pulls a larger circuit closed, allowing voltage to the starter.

Engine Stop Switch

The engine stop switch is located on the right hand controls. The engine stop switch also functions as the ignition switch. With the

engine stop switch in the RUN position, a CAN message is sent, signaling the BCM that the switch is in the RUN position. If CAN communication is interrupted while engine is running, a redundant engine stop switch circuit allows communication to the BCM.

Start Switch

The start switch is a push button switch located in the right hand controls. When the start switch is pressed, a CAN message is sent to the BCM.

BCM

The BCM supplies ignition and accessory power to most of the vehicle. It controls the lighting along with other functions by using the switches as inputs and the power circuits for the lights and other electrical loads as outputs.

Battery

WARNING

Batteries contain sulfuric acid, which could cause severe burns to eyes and skin. Wear a protective face shield, rubberized gloves and protective clothing when working with batteries. KEEP BATTERIES AWAY FROM CHILDREN. (00063a)

WARNING

Never remove warning label from battery. Failure to read and understand all precautions contained in warning, could result in death or serious injury. (00064b)

WARNING

Explosive hydrogen gas, which escapes during charging, could cause death or serious injury. Charge battery in a well-ventilated area. Keep open flames, electrical sparks and smoking materials away from battery at all times. KEEP BATTERIES AWAY FROM CHILDREN. (00065a)

WARNING

If battery becomes hot, gassing or spewing of electrolyte can occur, which could cause death or serious injury. Unplug or turn OFF the charger until battery cools. (00412b)

WARNING

Batteries, battery posts, terminals and related accessories contain lead and lead compounds, and other chemicals known to the State of California to cause cancer, and birth defects or other reproductive harm. Wash hands after handling. (00019e)

NOTICE

If battery releases an excessive amount of gas during charging, decrease the charging rate. Overheating can result in plate distortion, internal shorting, drying out or damage. (00413b)

The AGM batteries are permanently sealed, maintenance-free, valve-regulated, lead/calcium and sulfuric acid batteries.

The battery is recharged by the alternator and kept from overcharging by the regulator during use.

Battery condition can be determined by a voltage test, a charging and a load test. See Starting and Charging → BATTERY

TESTING.

The battery must be fully charged to perform a conductance test or a load test.

Grinding Noise or Erratic Starting

1. Remove starter.
2. Inspect the starter mounting surface and mating area on inner primary for arcing and pitting. This condition is caused by insufficient ground and or clamp load.
3. Clean mating surfaces.
4. Inspect starter pinion gear. Replace starter if damaged.
5. Install starter.

Connector Information

For additional information about the connectors in the following diagram(s) and diagnostic procedure(s), see Wiring → Wire Harness Connectors → General.

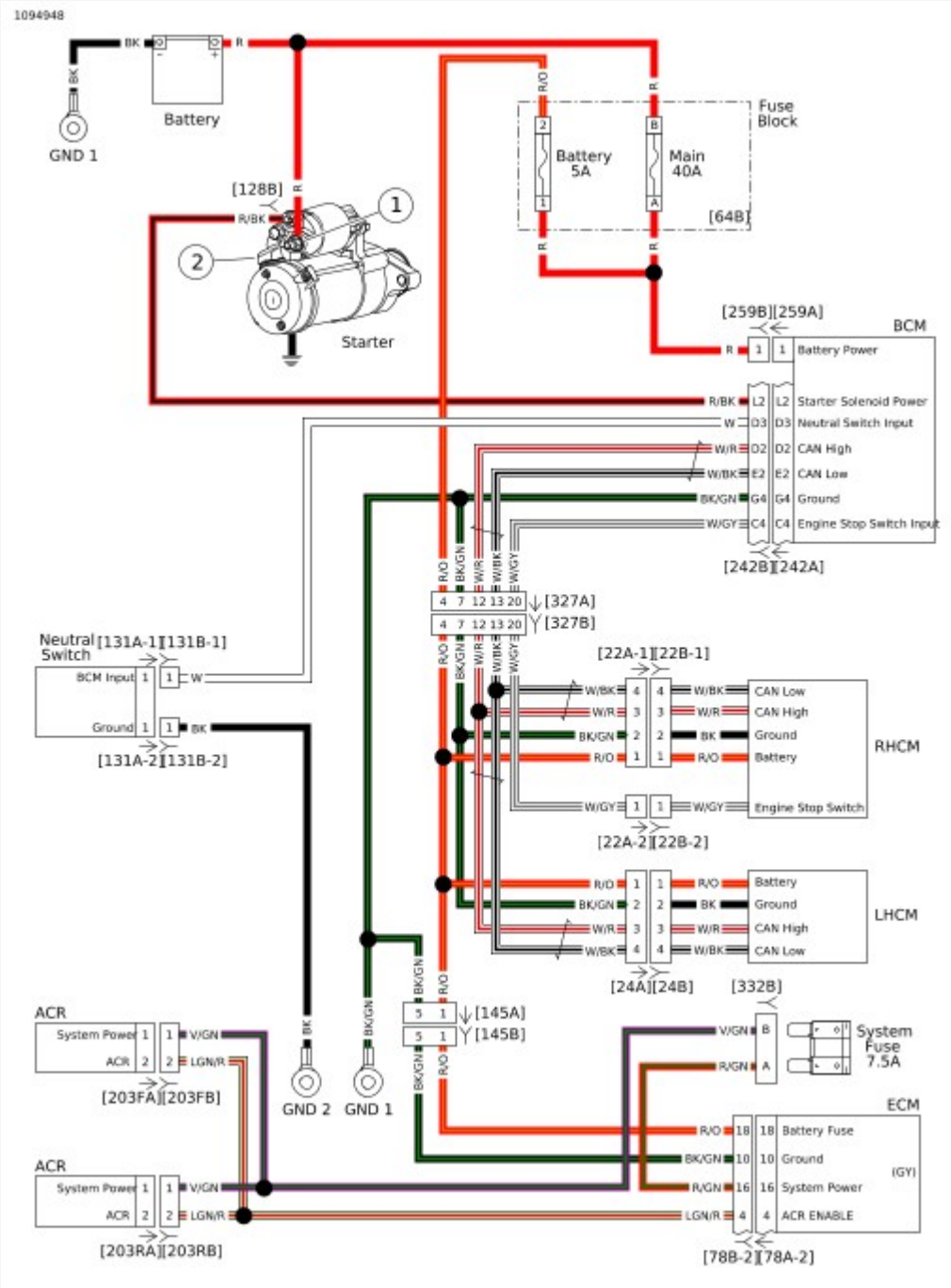

View interactive image

Figure 2. Starting Circuit

Troubleshooting tables contain detailed procedures to solve and correct problems. Follow **Starting and Charging → STARTING SYSTEM** to diagnose starting system problems. The **Initial Diagnostics → DIAGNOSTICS AND TROUBLESHOOTING → Voltage Drop** procedure will help you to locate poor connections or components with excessive voltage drops.

Table 1. Starter Testing Diagnostic Faults

POSSIBLE CAUSES
Short to voltage at starter solenoid
Start switch malfunction
Short to voltage on BCM supply circuit

1. Starting System Operational Test

1. Press start switch.
2. Does starter spin?
    a. **Yes, starter spins but does not engage.** See Starting and Charging → STARTING SYSTEM → Starter Spins But Does Not Engage.
    b. **Yes, starter stalls or spins too slowly.** See Starting and Charging → STARTING SYSTEM → Starter Stalls or Spins Too Slowly.
    c. **Yes, starter runs on.** Go to Test 3.
    d. **No.** Go to Test 2.

2. Noise Test

1. While listening for clicking noise from starter solenoid, press start switch.
2. Is there a click?
    a. **Yes, starter solenoid clicks.** See Starting and Charging → STARTING SYSTEM → Starter Solenoid Clicks.
    b. **No.** See Starting and Charging → STARTING SYSTEM → Nothing Clicks.

3. Starter Solenoid Test

1. Disconnect starter solenoid [128].
2. Does starter stop?
    a. **Yes.** Go to Test 4.
    b. **No.** Replace starter assembly.

4. Checking DTCs Test

1. Check DTCs.
2. Is DTC B2122 present?
    a. **Yes.** See Starting and Charging → STARTER OUTPUT DTCS.
    b. **No.** Replace BCM.

Special Tools

Description	Part Number	Qty.
TEST CONNECTOR KIT	HD-41404	1
BREAKOUT BOX	HD-50390-1	1
BCM CABLE	HD-50390-2	1
BCM OVERLAY	HD-50390-2-P	1

Table 1. Nothing Clicks Diagnostic Faults

POSSIBLE CAUSES
Low battery
Open fuse
Neutral switch malfunction
Open neutral circuit
Open ignition switch circuit
Open starter solenoid power circuit
Poor starter housing ground

NOTE

- Verify that vehicle is in neutral.
- Check that key fob is present and in working order (if security equipped).
- Verify the engine stop switch is in RUN position.

1. Battery Test

1. Perform battery test. See Starting and Charging → BATTERY TESTING.
2. Did battery pass test?
    a. **Yes.** Go to Test 2.
    b. **No.** Replace battery.

2. Ignition Circuit Test

1. Turn IGN ON.
2. Do odometer, headlamp and tail lamps illuminate?
    a. **Yes.** Go to Test 3.
    b. **No. Odometer is inoperative, but headlamp and tail lamps illuminate.** See Serial Data → Odometer Self-

Diagnostic Inoperative: DTC U0001, U0011, B2274.

c. **No. Odometer, headlamp and tail lamps inoperative.** See Serial Data → NO VEHICLE POWER OR LOST COMMUNICATION DTCS → No Vehicle Power: DTC U0140.

3. Starter Solenoid Circuit Test

1. Turn IGN OFF.
2. Disconnect starter solenoid [128].
3. Turn IGN ON.
4. Using TEST CONNECTOR KIT (Part Number:HD-41404), during the first 4-5 seconds, while start button is pressed, test voltage between [128B] (R/BK) wire and ground.
5. Is battery voltage present?

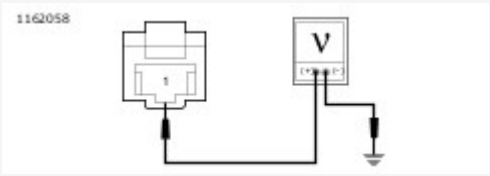

View interactive image

Figure 1.

a. **Yes.** Go to Test 4.
b. **No.** Go to Test 5.

4. Starter Ground Test

1. Remove starter attaching bolts.
2. Clean bolts and starter base, install starter bolts.
3. Does engine crank?
   a. **Yes. Engine cranks at normal speed.** Repair complete.
   b. **Yes. Engine cranks, but at a slower speed.** See Starting and Charging → TESTING STARTER ON MOTORCYCLE → Starter Current Draw Test.
   c. **No.** Replace starter assembly.

5. Neutral Switch Test

1. Observe neutral lamp.
2. Is neutral lamp illuminated?
   a. **Yes.** Go to Test 6.
   b. **No.** See Instruments → INDICATOR LAMPS → Neutral Lamp Inoperative.

6. Starter Solenoid Circuit Test

1. Turn IGN OFF.
2. Connect BREAKOUT BOX (Part Number:HD-50390-1) and BCM CABLE (Part Number:HD-50390-2) between wire harness [242B] and BCM [242A]. See Initial Diagnostics → DIAGNOSTIC TOOLS.
3. Verify BCM OVERLAY (Part Number:HD-50390-2-P) is in position on BOB.
4. Test resistance between BOB terminal L2 and [128B-2].

5. Is resistance less than 0.5 ohm?

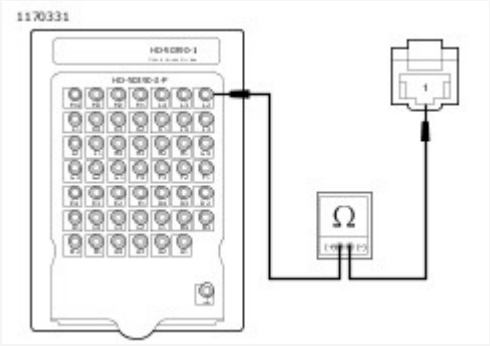

View interactive image

Figure 2.

   a. **Yes.** [Go to Test 7.](#)
   b. **No.** Repair open in (R/BK) wire.

7. BCM Test

1. Turn IGN OFF.
2. Remove main fuse [5].
3. Disconnect BCM and replace with known good BCM.
4. Install main fuse.
5. Turn IGN ON.
6. Attempt to start vehicle.
7. Does engine crank?
   a. **Yes.** Replace BCM.
   b. **No.** Replace RHCM.

Table 1. Starter Solenoid Clicks Diagnostic Faults

POSSIBLE CAUSES
Low battery
Starter malfunction
Starter solenoid malfunction
Poor battery cable connections
Mechanical binding

1. Battery Test

1. Perform battery test. See Starting and Charging → BATTERY TESTING.
2. Did battery pass test?
    a. **Yes.** Go to Test 2.
    b. **No.** Replace battery.

2. Starter Solenoid Voltage Drop Starter Side Test

1. See Initial Diagnostics → DIAGNOSTICS AND TROUBLESHOOTING → Voltage Drop → To Starter Solenoid Starter Terminal. Perform voltage drop test from battery (+) terminal to starter solenoid terminal 2 (BK) wire.
2. Is voltage drop greater than 1.0V?
    a. **Yes.** Go to Test 3.
    b. **No.** Go to Test 4.

3. Starter Solenoid Battery Side Voltage Drop Test

1. See Initial Diagnostics → DIAGNOSTICS AND TROUBLESHOOTING → Voltage Drop → To Starter Solenoid Battery Terminal. Perform voltage drop test from battery (+) terminal to starter solenoid terminal 1 (BK) wire.
2. Is voltage drop greater than 1.0V?
    a. **Yes.** Repair or replace (BK) wire from starter solenoid terminal 1 to battery (+) terminal.
    b. **No.** Replace starter assembly.

4. Starter Ground Circuit Voltage Drop Test

1. See Initial Diagnostics → DIAGNOSTICS AND TROUBLESHOOTING → Voltage Drop → Starter Ground Circuit. Perform voltage drop test from battery (-) terminal to chassis ground.
2. Is voltage drop greater than 1.0V?
    a. **Yes.** Inspect (BK) wire for damage from battery (-) terminal to chassis ground, repair or replace if necessary. Go to Test 5.
    b. **No.** Go to Test 6.

5. Starter Ground Test

1. Remove starter attaching bolts.
2. Clean bolts and starter base, install starter bolts.
3. Does engine crank?
    a. **Yes, engine cranks at normal speed.** Repair complete.
    b. **Yes, engine cranks, but at a slower speed.** See **Starting and Charging → TESTING STARTER ON MOTORCYCLE → Starter Current Draw Test**.
    c. **No.** Replace starter.

6. Starter Draw Test

1. Perform Starter Current Draw Test on motorcycle. See **Starting and Charging → TESTING STARTER ON MOTORCYCLE → Starter Current Draw Test**.
2. Perform Starter Motor Free Running Current Draw Test on bench. See **Starting and Charging → TESTING STARTER ON BENCH → Free Running Current Draw Test**.
3. Are test results within range?
    a. **Yes.** **Go to Test 7.**
    b. **No.** Replace starter.

7. Mechanical Binding Test

1. Remove spark plugs and place transmission in sixth gear.
2. Raise vehicle.
3. Rotate rear wheel.
4. Check for engine binding in the primary and/or crankshaft.
5. Is engine binding?
    a. **Yes.** Repair as needed.
    b. **No.** Replace starter assembly.

Table 1. Starter Spins But Does Not Engage Diagnostic Faults

POSSIBLE CAUSES
Starter clutch assembly
Clutch shell and/or starter pinion damage

1. Pinion Gear and Clutch Shell Test

1. Remove primary cover.
2. Inspect for damage to starter pinion gear and clutch shell and sprocket.

NOTE

Inspect ACR operation before installation of **new** starter clutch assembly.

3. Is damage present?
    a. **Yes.** Replace starter assembly or clutch shell and sprocket.
    b. **No.** Replace starter assembly.

Special Tools

Description	Part Number	Qty.
TEST CONNECTOR KIT	HD-41404	1
BREAKOUT BOX	HD-50390-1	1
ECM CABLE	HD-50390-4	1
ECM OVERLAY	HD-50390-4-P	1

Table 1. Starter Stalls or Spins Too Slowly Diagnostic Faults

POSSIBLE CAUSES
Low battery
Starter malfunction
Starter solenoid malfunction
Poor connections at starter ground
Poor battery cable connections

1. Battery Test

1. Perform battery test. See Starting and Charging → BATTERY TESTING.
2. Did battery pass test?
    a. **Yes.** Go to Test 2.
    b. **No.** Replace battery.

2. Starter Stud Voltage Drop Test

1. Perform voltage drop test from battery (+) terminal to starter solenoid terminal 2. See Initial Diagnostics → DIAGNOSTICS AND TROUBLESHOOTING → Voltage Drop.
2. Is voltage drop greater than 1.0V?
    a. **Yes.** Go to Test 7.
    b. **No.** Go to Test 3.

3. Starter Ground Circuit Voltage Drop Test

1. Perform voltage drop test between battery (-) terminal and starter attaching bolts.
2. Is voltage drop greater than 1.0V?
    a. **Yes.** Go to Test 4.
    b. **No.** Go to Test 5.

4. Chassis Ground Circuit Voltage Drop Test

1. Perform voltage drop test from battery (-) terminal to chassis ground.
2. Is voltage drop greater than 1.0V?
    a. **Yes.** Inspect (BK) wire for damage from battery (-) terminal to chassis ground, repair or replace if necessary.
    b. **No.** Clean bolts and starter base, install starter bolts.

5. ACR Test

1. Turn IGN OFF.
2. Connect **BREAKOUT BOX (Part Number:HD-50390-1)** and **ECM CABLE (Part Number:HD-50390-4)** between wire harness [78B-1], [78B-2], [78B-3] and [78A-1], [78A-2], [78A-3]. See **Initial Diagnostics → DIAGNOSTIC TOOLS**.
3. Verify **ECM OVERLAY (Part Number:HD-50390-4-P)** is in position on BOB.
4. Turn IGN ON.
5. Using **TEST CONNECTOR KIT (Part Number:HD-41404)**, jumper between BOB [78-2] terminals 4 and 10.
6. Do ACRs click?

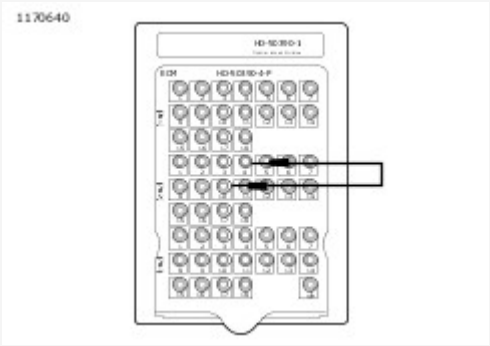

View interactive image

Figure 1.

    a. **Yes.** **Go to Test 6.**
    b. **No.** Replace front and rear ACR solenoids.

6. Starter Draw Test

1. Perform Starter Current Draw Test on motorcycle. See **Starting and Charging → TESTING STARTER ON MOTORCYCLE → Starter Current Draw Test**.
2. Perform Starter Motor Free Running Current Draw Test (on bench). See **Starting and Charging → TESTING STARTER ON BENCH → Free Running Current Draw Test**.
3. Are test results within range?
    a. **Yes.** With the spark plugs removed and transmission in 6th gear, rotate rear wheel. Check for engine, primary and/or crankshaft bind.
    b. **No.** Replace starter.

7. Starter Solenoid Battery Side Voltage Drop Test

1. Perform voltage drop test between battery (+) terminal and starter solenoid terminal 1 (R) wire.
2. Is voltage drop greater than 1.0V?
    a. **Yes.** Repair or replace connection between battery (+) terminal and starter solenoid terminal 1 (R) wire.

b. **No.** Replace starter assembly.

The starter solenoid circuit is controlled and monitored by the BCM. The BCM receives a CAN message from the start switch in the RHCM to engage the starter. Voltage is sent from the BCM to the starter solenoid [128] (R/BK) wire. The BCM disables the starter solenoid if the start switch is pressed for more than 10 seconds.

Table 1. Code Description

DTC	DESCRIPTION
B2121	Starter output open
B2122	Starter output shorted high
B2123	Starter output shorted low
B2124	Starter output overloaded

Conditions for Setting

- DTC B2121 will set if the starter solenoid circuit draws less than 600 milliamps.
- DTC B2124 will set if the starter solenoid circuit draws more than 12 amps.

Connector Information

For additional information about the connectors in the following diagram(s) and diagnostic procedure(s), see [Wiring → Wire Harness Connectors → General].

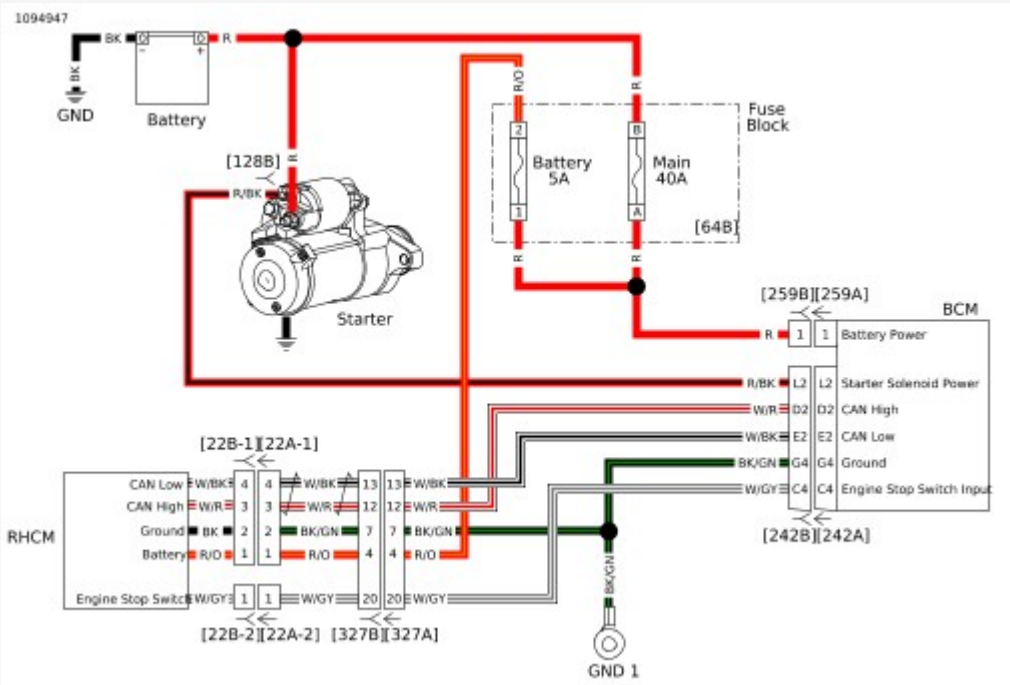

View interactive image

Figure 1. Starter

Special Tools

Description	Part Number	Qty.
TEST CONNECTOR KIT	HD-41404	1
BREAKOUT BOX	HD-50390-1	1
BCM CABLE	HD-50390-2	1
BCM OVERLAY	HD-50390-2-P	1

Table 1. DTC B2121 Diagnostic Faults

POSSIBLE CAUSES
Open in starter circuit
Open in starter solenoid

1. Starter Solenoid Circuit Test

1. Turn IGN OFF.
2. Disconnect starter solenoid [128].
3. Turn IGN ON.
4. Using **TEST CONNECTOR KIT (Part Number:HD-41404)**, during first 4-5 seconds, while start button is pressed, test battery voltage between [128B] (R/BK) and ground.
5. Is battery voltage present?

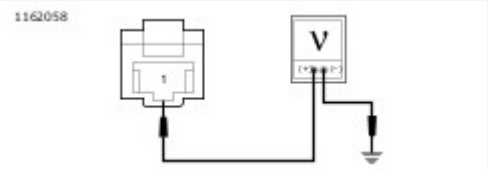

View interactive image

Figure 1.

a. **Yes.** Replace starter assembly.
b. **No.** **Go to Test 2.**

2. Starter Solenoid Supply Voltage Test

1. Turn IGN OFF.
2. Connect **BREAKOUT BOX (Part Number:HD-50390-1)** and **BCM CABLE (Part Number:HD-50390-2)** between wire harness [242B] and [242A]. See **Initial Diagnostics → DIAGNOSTIC TOOLS**.
3. Verify **BCM OVERLAY (Part Number:HD-50390-2-P)** is in position on BOB.
4. During first 4-5 seconds, while start button is pressed, test voltage between BOB terminal L2 and ground.
5. Is voltage present?

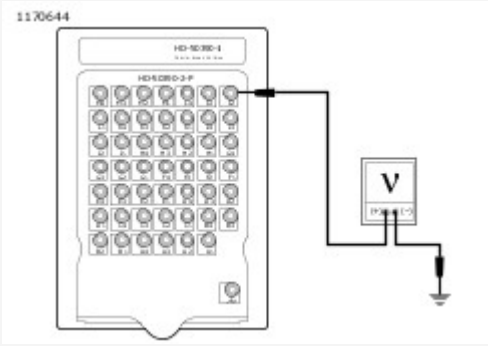

View interactive image

Figure 2.

a. **Yes.** Repair open in (R/BK) wire between [242B] terminal L2 and [128B].
b. **No.** Replace BCM.

Special Tools

Description	Part Number	Qty.
TEST CONNECTOR KIT	HD-41404	1
BREAKOUT BOX	HD-50390-1	1
BCM CABLE	HD-50390-2	1
BCM OVERLAY	HD-50390-2-P	1

Table 1. DTC B2122 Diagnostic Faults

POSSIBLE CAUSES
Short in starter circuit
Short in starter solenoid

1. Starter Solenoid Circuit Test

1. Turn IGN OFF.
2. Disconnect starter solenoid [128].
3. Turn IGN ON.
4. Using **TEST CONNECTOR KIT (Part Number:HD-41404)**, test voltage between [128B] (R/BK) and ground.
5. Is battery voltage present?

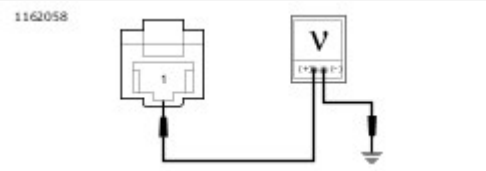

View interactive image

Figure 1.

a. **Yes.** **Go to Test 2.**
b. **No.** Replace starter assembly.

2. Starter Solenoid Supply Voltage Test

1. Turn IGN OFF.
2. Connect **BREAKOUT BOX (Part Number:HD-50390-1)** and **BCM CABLE (Part Number:HD-50390-2)** between wire harness [242B] and [242A]. See **Initial Diagnostics → DIAGNOSTIC TOOLS**.
3. Verify **BCM OVERLAY (Part Number:HD-50390-2-P)** is in position on BOB.
4. Turn IGN ON.
5. Without pressing start button, test voltage between BOB terminal L2 and ground.
6. Is voltage present?

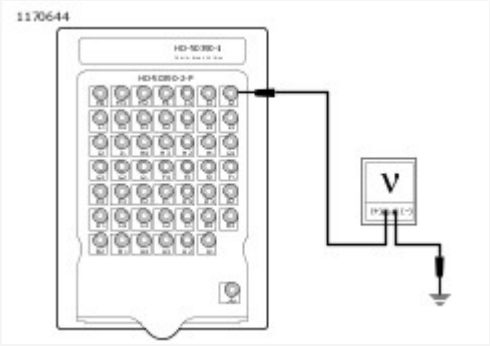

View interactive image

Figure 2.

a. **Yes.** Repair short to voltage in (R/BK) wire between [242B] terminal L2 and [128B].
b. **No.** Replace BCM.

Special Tools

Description	Part Number	Qty.
TEST CONNECTOR KIT	HD-41404	1
BREAKOUT BOX	HD-50390-1	1
BCM CABLE	HD-50390-2	1
BCM OVERLAY	HD-50390-2-P	1

Table 1. DTC B2123 Diagnostic Faults

POSSIBLE CAUSES
Short in starter circuit
Short in starter solenoid

1. Starter Solenoid Supply Resistance Test

1. Turn IGN OFF.
2. Connect **BREAKOUT BOX (Part Number:HD-50390-1)** and **BCM CABLE (Part Number:HD-50390-2)** to wire harness [242B], leaving [242A] disconnected. See **Initial Diagnostics → DIAGNOSTIC TOOLS**.
3. Verify **BCM OVERLAY (Part Number:HD-50390-2-P)** is in position on BOB.
4. Using **TEST CONNECTOR KIT (Part Number:HD-41404)**, test continuity between BOB terminal L2 and ground.
5. Is continuity present?

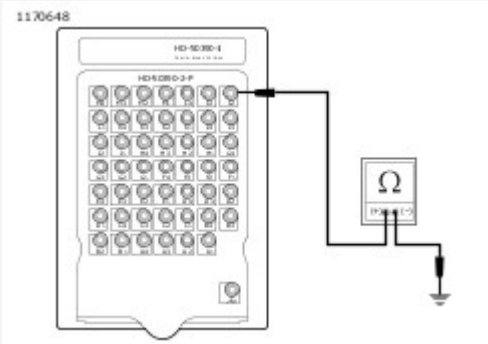

View interactive image

Figure 1.

a. **Yes.** Repair short to ground in (R/BK) wire between [242B] terminal L2 and [128B].
b. **No.** Replace BCM.

Special Tools

Description	Part Number	Qty.
TEST CONNECTOR KIT	HD-41404	1
BREAKOUT BOX	HD-50390-1	1
BCM CABLE	HD-50390-2	1
BCM OVERLAY	HD-50390-2-P	1

Table 1. DTC B2124 Diagnostic Faults

POSSIBLE CAUSES
Short in starter circuit
Starter solenoid malfunction
Corrosion at connector

1. Starter Solenoid [128] Test

1. Turn IGN OFF.
2. Disconnect starter solenoid [128].
3. Inspect [128] and (R/BK) wire for damage or corrosion.
4. Is any present?
    a. **Yes.** Repair or replace [128] and (R/BK) wire.
    b. **No.** Go to Test 2.

2. Starter Solenoid Circuit Test

1. Using TEST CONNECTOR KIT (Part Number:HD-41404), test continuity between [128B] (R/BK) wire and ground.
2. Is continuity present?

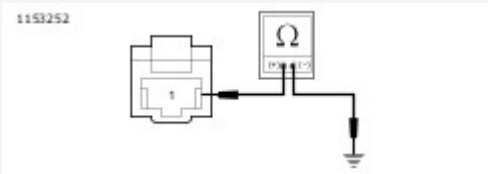

View interactive image

Figure 1.

a. **Yes.** Go to Test 3.
b. **No.** Replace starter assembly.

3. Starter Solenoid Supply Continuity Test

1. Connect **BREAKOUT BOX (Part Number:HD-50390-1)** and **BCM CABLE (Part Number:HD-50390-2)** to wire harness [242B], leaving [242A] disconnected. See **Initial Diagnostics → DIAGNOSTIC TOOLS**.
2. Verify **BCM OVERLAY (Part Number:HD-50390-2-P)** is in position on BOB.
3. Test continuity between BOB terminal L2 and ground.
4. Is continuity present?

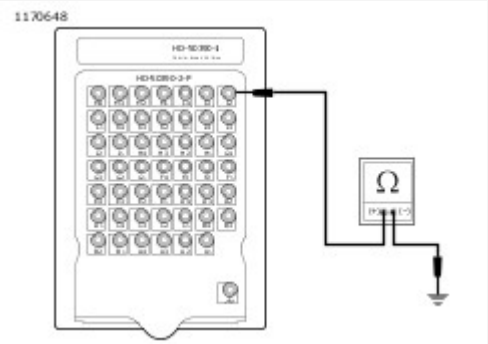

View interactive image

Figure 2.

a. **Yes.** Repair short to ground in (R/BK) wire between [242B] terminal L2 and [128B].
b. **No.** Replace BCM.

Special Tools

Description	Part Number	Qty.
FLUKE AC/DC CURRENT PROBE	HD-39617	1

NOTE

- Engine temperature should be stable and at room temperature.
- Battery should be fully charged.

Check starter current draw with **FLUKE AC/DC CURRENT PROBE (Part Number:HD-39617)**. See **Initial Diagnostics → DIAGNOSTIC TOOLS**.

1. Verify that transmission is in neutral.
2. Disconnect CKP sensor [79].
3. Clamp **FLUKE AC/DC CURRENT PROBE (Part Number:HD-39617)** around positive battery cable to starter solenoid.

NOTE

After the start button has been pressed for 10 seconds, the BCM will stop voltage to the starter solenoid automatically.

4. With IGN ON, press start button and read ammeter. Disregard initial high current reading. This is normal when engine is first turned over.
5. Did starter current draw exceed 250A?
   a. **Yes.** Perform a bench test. See **Starting and Charging → TESTING STARTER ON BENCH → Free Running Current Draw Test**.
   b. **No.** Starter current is within specification.

Special Tools

Description	Part Number	Qty.
FLUKE AC/DC CURRENT PROBE	HD-39617	1

1. Place starter in vise. Use a clean shop towel to prevent scratches or other damage.
2. See Figure 1. Attach one heavy jumper cable (6 gauge minimum).
   a. Connect one end to starter mounting flange.
   b. Connect the other end to battery (-) terminal of a fully charged battery.
3. Connect a second heavy jumper cable (6 gauge minimum).
   a. Connect one end to battery (+) terminal of battery.
   b. Connect other end to battery terminal on starter. Clamp FLUKE AC/DC CURRENT PROBE (Part Number:HD-39617) around cable.

CAUTION

Keep fingers and clothing away from starter gear to prevent personal injury. (00613b)

4. Connect a smaller jumper cable (14 gauge minimum).
   a. Connect one end to positive (+) terminal of battery.
   b. Connect other end to solenoid relay terminal [128].
5. Check ammeter reading.
   a. Ammeter should show 90A maximum.
   b. If reading is higher, replace starter.
   c. If starter current draw on vehicle was over 250A and this test was within specification, possible causes may be ACR malfunction, engine modifications, or powertrain binding.

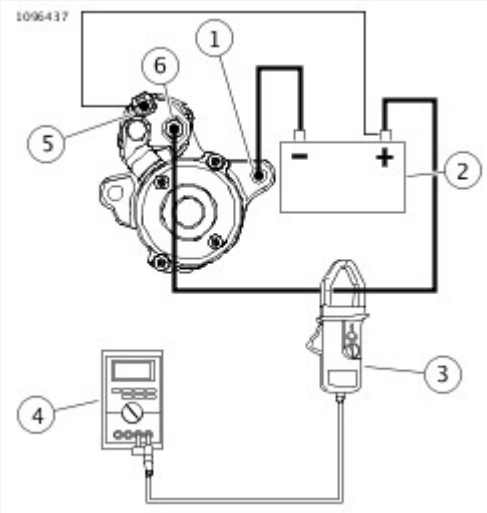

View interactive image

View interactive image

1	Mounting flange
2	Battery
3	Current probe
4	Multimeter
5	Relay terminal
6	Batter terminal

Figure 1. Free Running Current Draw Test

The charging system is the source of electric current that supplies power to run the ignition, lights, accessories and charges the battery.

- AC voltage is generated by an alternator assembly driven by the crankshaft.
- A rotor supplied with a magnetic field spins around a stator.
- A rectifier (located in the regulator) converts the voltage from AC to DC.
- A regulator matches the output voltage to the battery voltage as engine speed varies.

Even though the alternator provides additional voltage at all engine speeds, avoid idling the engine for extended periods of time.

Alternator

The alternator consists of two main components:

- The rotor which mounts to the primary side of the crankshaft.
- The stator which is attached to the crankcase half.

Voltage Regulator

See **Starting and Charging → CHARGING SYSTEM → Troubleshooting → Charging System Circuit**. The voltage regulator is a series regulator. The circuit combines the functions of rectifying and regulating.

Battery

Test for a weak or dead battery. Battery must be fully charged in order to perform a battery diagnostic test, load test or starting or charging tests. See **Starting and Charging → BATTERY TESTING**.

Wiring

The stator connections must be clean and tight.

Check for corroded or loose connections in the charging system circuit.

Voltage Regulator Inspection

The voltage regulator must be clean and tight. Verify both AC and DC connectors are fully inserted and locked with the regulator latch.

Connector Information

For additional information about the connectors in the following diagram(s) and diagnostic procedure(s), see **Wiring → Wire Harness Connectors → General**.

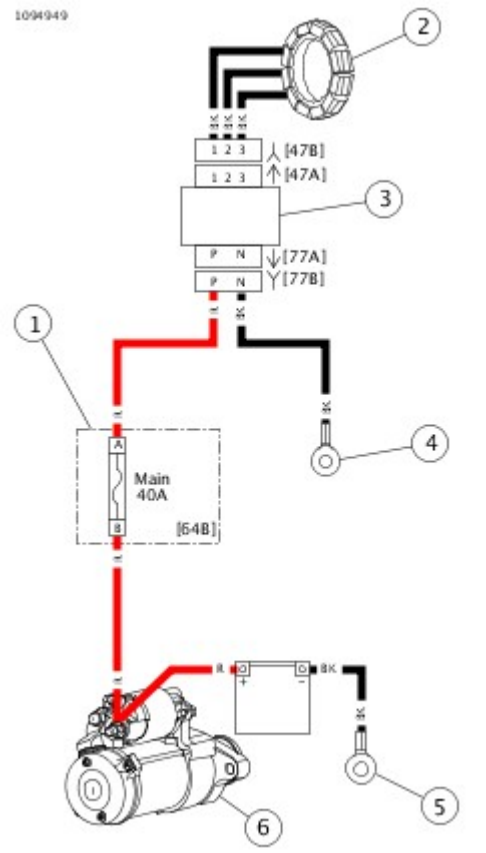

View interactive image

1	Fuse block
2	Stator

3	Voltage regulator
4	GND2
5	GND top of transmission case
6	Starter

Figure 1. Charging System Circuit

Special Tools

Description	Part Number	Qty.
TEST CONNECTOR KIT	HD-41404	1

Table 1. Low or No Charging Diagnostic Faults

POSSIBLE CAUSES
Battery
Stator malfunction
Rotor malfunction
Voltage regulator malfunction
Open voltage regulator circuit
Stator shorted to ground
AC wire shorted to ground

1. Battery Test

1. Perform battery test. See Starting and Charging → BATTERY TESTING.
2. Did battery pass test?
    a. **Yes.** Go to Test 2.
    b. **No.** Replace battery.

2. Off Idle Voltage Test

1. Start engine and run at 3000 rpm for 30 seconds.
2. With the engine still running at 3000 RPM, test battery voltage.
3. Is voltage above 14V?
    a. **Yes.** Charging system working properly.
    b. **No.** Go to Test 3.

3. AC Output Test

1. Perform AC output test. See Starting and Charging → CHARGING SYSTEM → Battery Charging Tests.
2. Did output test pass?
    a. **Yes.** Go to Test 6.
    b. **No.** Go to Test 4.

4. Stator Test

1. Perform stator test. See Starting and Charging → CHARGING SYSTEM → Battery Charging Tests.
2. Is the stator good?
    a. **Yes.** Go to Test 5.
    b. **No.** Replace stator.

5. Rotor Inspection Test

1. Turn IGN OFF.
2. Inspect rotor magnets for damage.
3. Remove compensator assembly and inspect rotor and shaft splines for excessive wear.
4. Verify stator bolts have not backed out and contacted rotor.
5. Is rotor in good condition?
    a. **Yes.** Go to Test 6.
    b. **No.** Replace rotor.

6. Voltage Regulator Power Circuit Test

1. Disconnect voltage regulator [77].
2. Using TEST CONNECTOR KIT (Part Number:HD-41404), test resistance between [77B] terminal (+) and battery.
3. Is resistance less than 0.5 ohm?

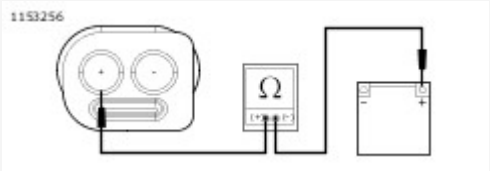

View interactive image

Figure 1.

    a. **Yes.** Go to Test 7.
    b. **No.** Repair open wire between voltage regulator [77B] terminal (+) and battery.

7. Voltage Regulator Ground Circuit Test

NOTE

Voltage regulator ground must have a clean, tight connection for proper grounding.

1. Test resistance between [77B] terminal (-) and ground 2.
2. Is resistance less than 0.5 ohms?

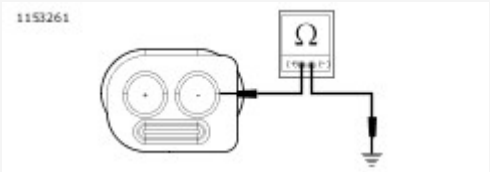

View interactive image

Figure 2.

a. **Yes.** Replace voltage regulator.
b. **No.** Repair open wire between voltage regulator [77B] terminal (-) and ground 2 (BK) wire.

Special Tools

Description	Part Number	Qty.
TEST CONNECTOR KIT	HD-41404	1

Table 1. Overcharging Diagnostic Faults

POSSIBLE CAUSES
Voltage regulator malfunction
Open in ground circuit

1. Battery Voltage Test

1. Start engine and run at 3000 rpm, test battery voltage.
2. Is voltage above 15.5V?
    a. **Yes.** Go to Test 2.
    b. **No.** Charging system working properly.

2. Voltage Regulator Ground Circuit Test

NOTE

Voltage regulator ground must have a clean and tight connection for proper grounding.

1. Turn IGN OFF.
2. Disconnect voltage regulator [77].
3. Using TEST CONNECTOR KIT (Part Number:HD-41404), test resistance between [77B] terminal (-) and ground 2.
4. Is resistance less than 0.5 ohms?

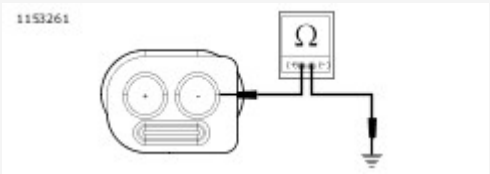

View interactive image

Figure 1.

a. **Yes.** Replace voltage regulator.
b. **No.** Repair open wire between [77B] terminal (-) and ground 2 (BK) wire.

Table 1. Low Battery After Extended IGN OFF Diagnostic Faults

POSSIBLE CAUSES
Battery
Accessories improperly wired to stay on at all times
Excessive draw from electrical component with IGN OFF
Battery discharged because motorcycle was not operated for a long period

1. Battery Test

1. Perform battery test. See Starting and Charging → BATTERY TESTING.
2. Did battery pass test?
    a. **Yes.** Go to Test 2.
    b. **No.** Replace battery.

2. Amp Draw Test

1. Perform milliampere draw test. See Starting and Charging → CHARGING SYSTEM → Battery Charging Tests.
2. Did test exceed maximum draw?
    a. **Yes.** Repair excessive draw and run test again.
    b. **No.** System is working properly.

Table 1. Battery Runs Down During Use Diagnostic Faults

POSSIBLE CAUSES
Battery
Excessive accessory draw
Accessories on when idling or low rpm riding for extended period

1. Battery Test

1. Perform battery test. See **Starting and Charging → BATTERY TESTING**.
2. Did battery pass test?
    a. **Yes.** **Go to Test 2.**
    b. **No.** Replace battery.

2. Total Current Draw Test

1. Perform total current draw and output test. See **Starting and Charging → CHARGING SYSTEM → Battery Charging Tests**.
2. Does charging system exceed current draw by 3.5A?
    a. **Yes.** System is working properly.
    b. **No.** System accessory power requirements exceed charging system capability.

Special Tools

Description	Part Number	Qty.
TEST CONNECTOR KIT	HD-41404	1

Milliampere Draw Test

NOTE

Be sure accessories are not wired so they stay on at all times. This condition could drain battery completely if vehicle is parked for a long time.

1. **Security system:** Enable service mode before performing test. See Accessories, Horn, Lighting and Security → SERVICE AND EMERGENCY FUNCTIONS AND CONFIGURATIONS.
2. Turn IGN OFF.
3. Verify all lights and accessories are OFF.
4. Disconnect the security siren (if equipped).
5. Remove main fuse.

NOTE

With IGN OFF, an initial current draw will occur directly after connecting meter. This should drop to the values shown in Table 1 in less than 30 seconds.

6. See Figure 1. Using TEST CONNECTOR KIT (Part Number:HD-41404), connect ammeter to main fuse socket terminals. With this arrangement, you will also pick up any regulator drain.
7. Observe current reading.
   a. Add the maximum draw values found in table for the components equipped on the vehicle being tested. If the reading observed on the ammeter is less than the sum of the maximum draw for the components, the draw is within specification. Refer to Table 1.
   b. A higher ammeter reading indicates excessive current draw. Locate the component or accessory with high draw by unplugging one at a time while observing the meter reading.

Table 1. Milliampere Draw Test

ITEM	MAXIMUM DRAW IN MILLIAMPERES
LHCM	0.5
RHCM	0.5
IM	0.5
Tachometer (if equipped)	0.5
Regulator	1.0
ABS (if equipped)	1.0
BCM	1.0
ECM	1.0

Security siren (if equipped)	20.0*

* Siren will draw for 2-24 hours from time motorcycle battery is connected and 0.05 mA once siren battery is charged. Disconnect siren during milliampere draw test.

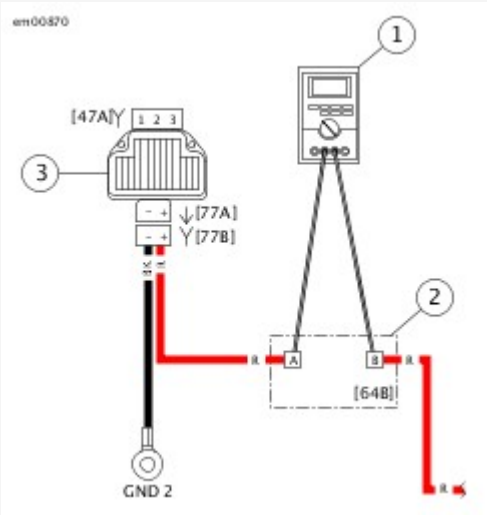

View interactive image

1	Ammeter
2	Fuse block [64B]
3	Voltage regulator

Figure 1. Milliampere Draw Test (Ignition Turned to OFF)

Total Current Draw and Output Test

If battery runs down during use, the current draw of the motorcycle components and accessories may exceed output of the charging system.

NOTE

If a load tester is unavailable, use an ammeter with current probe.

WARNING

Turn battery load tester OFF before connecting tester cables to battery terminals. Connecting tester cables with load tester ON can cause a spark and battery explosion, which could result in death or serious injury. (00252a)

1. See Figure 2. Connect load tester.
   a. Remove battery.
   b. Install battery terminal adapters HD-50977 to the battery.
   c. Using two foot long, 4-gauge jumper cables with terminal lugs, connect the battery to the vehicle.

NOTE

Use a 15 cm (6 in) piece of wiring sleeve to cover the positive cable connection to prevent shorting to the frame.

   d. Connect negative and positive load tester leads to battery terminals.
   e. Place load tester induction pickup over battery negative cable.
2. With IGN OFF, disconnect voltage regulator [77].
3. Start engine.
4. Turn all continuously running lights and accessories ON (headlamp on high beam).
5. Run engine at 3000 rpm and make note of the current draw.
6. Turn IGN OFF.
7. Connect voltage regulator [77].
8. Remove the induction pickup from the battery negative cable.
9. Place induction pickup over positive regulator cable.
10. Start engine and run at 3000 rpm.

NOTE

Do not leave any load switch turned on for more than 20 seconds or overheating and tester damage are possible.

11. Increase the load as required to obtain a constant 13.0V.
12. Current output should be 35-44A. Make note of current output.

NOTE

Rider's habits may require output test at lower rpm.

13. Compare both of these readings.
    a. The current output should exceed current draw by 3.5A minimum.
    b. If output does not meet specifications, there may be too many accessories for the charging system to handle.

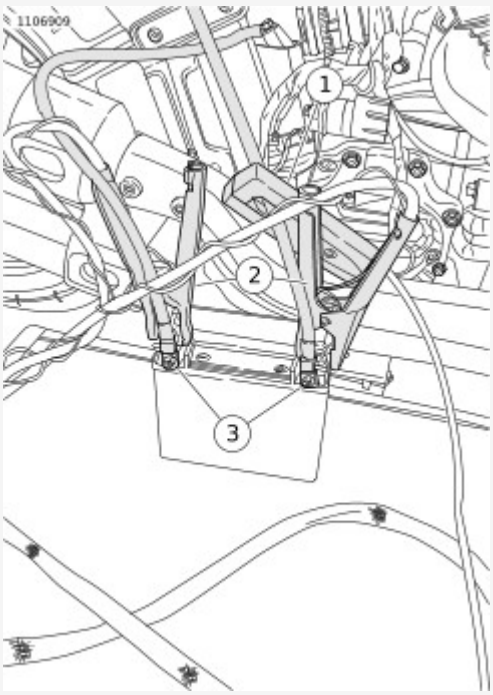

View interactive image

1	Induction pickup
2	Load tester leads

3	Jump cables from battery to vehicle

Figure 2. Check Current Draw (Ignition On)

Stator Test

1. Turn IGN OFF.
2. See Figure 7. Using TEST CONNECTOR KIT (Part Number:HD-41404), connect an ohmmeter.

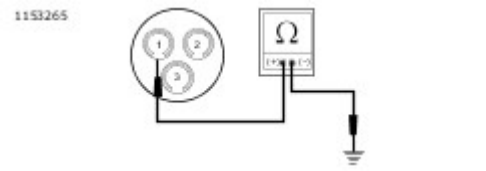

View interactive image

Figure 3.

   a. Disconnect voltage regulator [47] from alternator stator wiring.
   b. Insert one ohmmeter lead into a stator connector socket.
   c. Attach the other lead to a suitable ground.
3. Test continuity.
   a. A good stator will show no continuity (open circuit) between all stator sockets and ground.
   b. Any other reading indicates a grounded stator which must be replaced.
4. See Figure 8. Remove ground lead. Test resistance across stator [47B] terminals 1-2, 2-3 and 3-1.

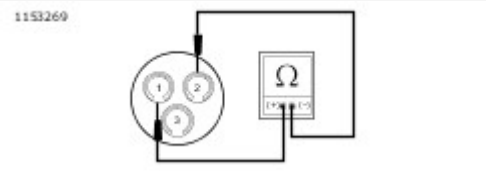

View interactive image

Figure 4.

Figure 5.

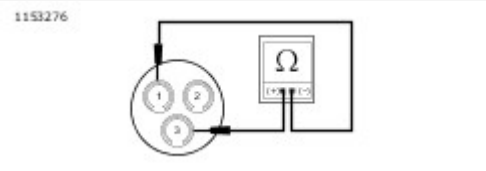

View interactive image

Figure 6.

   a. Resistance across all stator terminals should be 0.1-0.3 ohm.

b. If resistance is out of range, replace stator.

NOTE

When testing resistance (ohms), compensate for test lead resistance before performing the measurement. Select the ohms position and touch the test leads together. See the multimeter user's manual to zero display or manually subtract test lead resistance from the measured circuit's value.

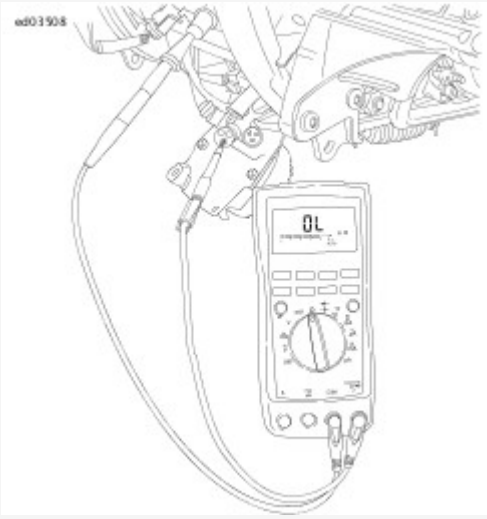

View interactive image

Figure 7. Test for Grounded Stator (Typical)

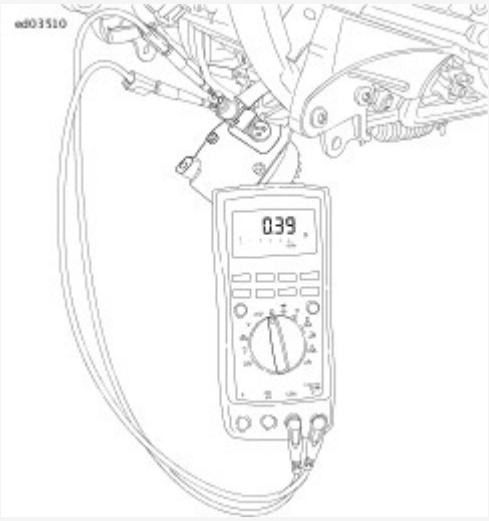

View interactive image

Figure 8. Check for Stator Resistance (Typical)

AC Output Test

1. See Figure 12. Using TEST CONNECTOR KIT (Part Number:HD-41404), test AC output.

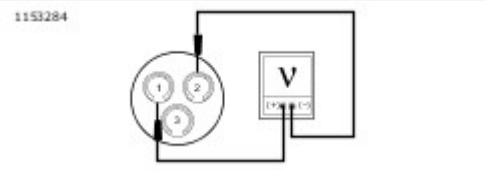

View interactive image

Figure 9.

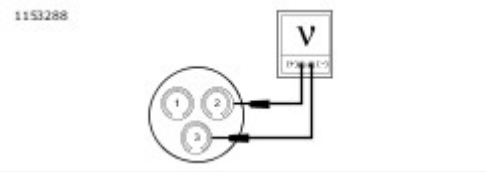

View interactive image

Figure 10.

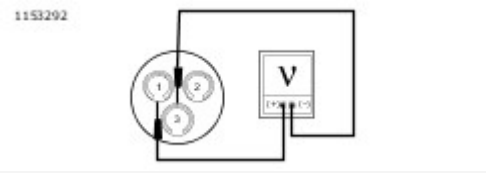

View interactive image

Figure 11.

a. Disconnect voltage regulator [47] from alternator stator wiring.
b. Test for VAC across stator [47B] terminals 1 to 2.
c. Run the engine at 2000 rpm. The VAC output should be 32-56 VAC (approximately 16-28 per 1000 rpm).
d. Repeat test using terminals 2 to 3 and 1 to 3.

2. Compare test results to specifications.
   a. If the output is below specifications, charging problem could be a faulty rotor or stator.
   b. If output is within specifications, charging problem might be faulty voltage regulator. Replace as required.

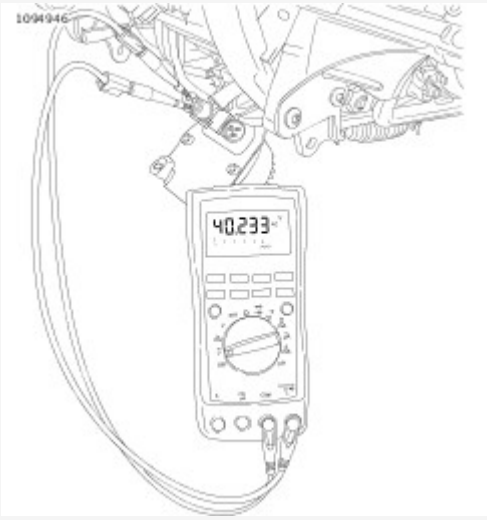

View interactive image

Figure 12. Check Stator AC Voltage Output (Typical)

Battery voltage is monitored by the ABS module.

- If the battery voltage fails to meet normal operating parameters, the ABS indicator is illuminated.
- If the voltage remains out of normal operating parameters and the vehicle speed is above 6 km/h (4 mph), a DTC is set.

DTC C0562 and C0563

Battery voltage is monitored by the ABS module on both terminals 9 and 18.

- DTC C0562 is displayed when the ABS ECU falls below 9.4V during a non-ABS event or the ABS ECU falls below 9.2V during an ABS event.
- DTC C0563 is displayed when the ABS ECU exceeds 16.8V during a non-ABS event.

Table 1. Code Description

DTC	DESCRIPTION
C0562	ABS voltage low
C0563	ABS voltage high

Diagnostic Tips

Any of the following conditions could cause these DTCs to set:

- The charging system is malfunctioning.
- There is excessive battery draw.
- Extended idling in heavy traffic.
- A faulty system ground is present.
- Shorted ABS actuator circuit.

Low voltage generally indicates a loose wire, corroded connections, battery or a charging system problem.

High voltage DTC may set when the vehicle is placed on an unapproved constant current battery charger for a long period of time.

Connector Information

For additional information about the connectors in the following diagram(s) and diagnostic procedure(s), see [Wiring → Wire Harness Connectors → General](#).

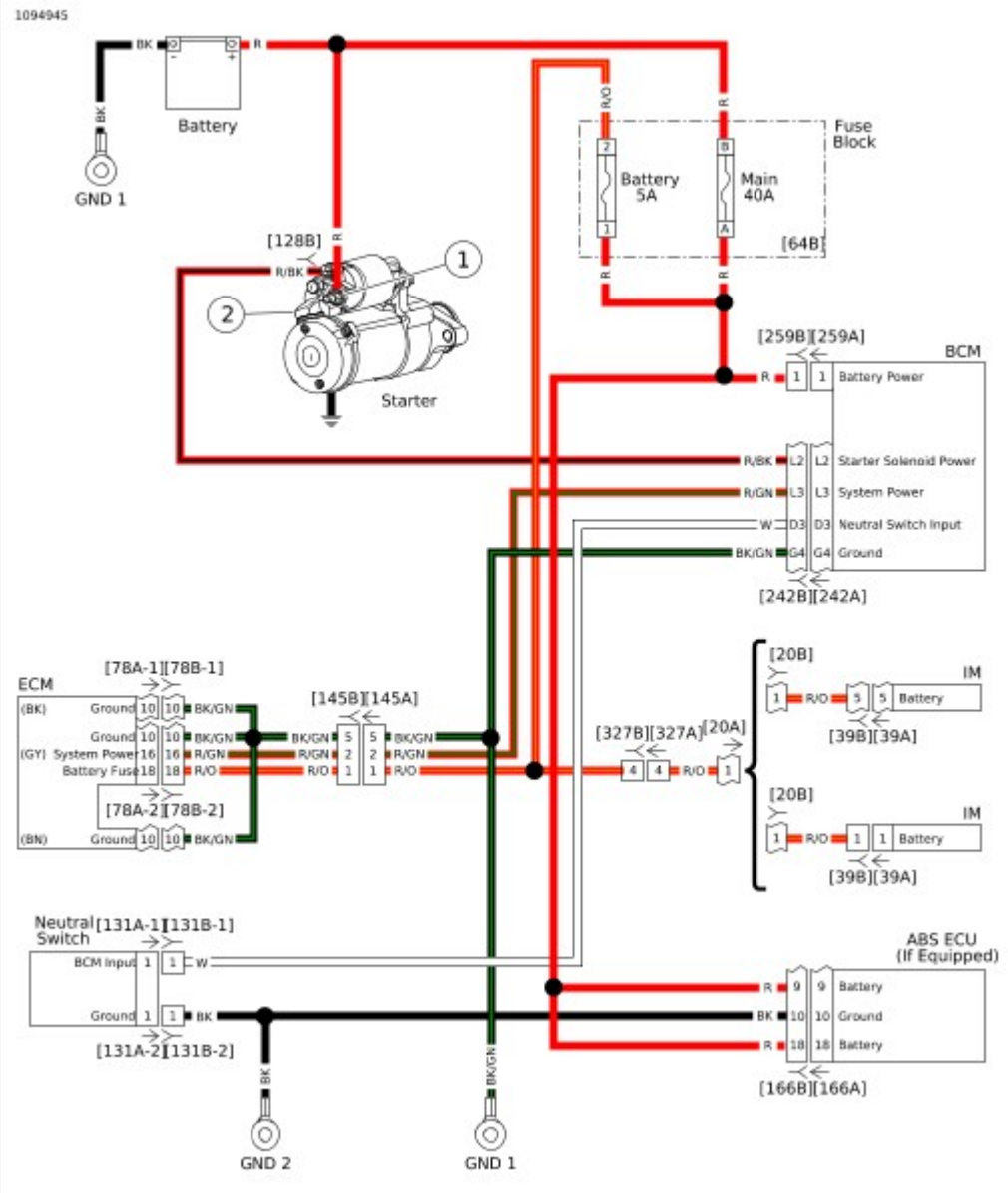

View interactive image

Figure 1. High and Low Voltage Modules

Special Tools

Description	Part Number	Qty.
TEST CONNECTOR KIT	HD-41404	1
BREAKOUT BOX	HD-50390-1	1
ABS OVERLAY	HD-50390-1-P1	1
ABS CABLE	HD-50390-6	1

Table 1. DTC C0562 Diagnostic Faults

POSSIBLE CAUSES
Low battery
Open ABS ECU ground circuit
Open ABS ECU battery circuit

1. Battery Test

1. Perform battery test. See **Starting and Charging → BATTERY TESTING**.
2. Did battery pass test?
    a. **Yes.** **Go to Test 2.**
    b. **No.** Replace battery.

2. Charging System Test

1. Perform charging system test. See **Starting and Charging → CHARGING SYSTEM → Low or No Charging**.
2. Is charging system working properly?
    a. **Yes.** **Go to Test 3.**
    b. **No.** Repair charging system.

3. ABS ECU Battery Voltage Test

1. Turn IGN OFF.
2. Connect **BREAKOUT BOX (Part Number:HD-50390-1)** and **ABS CABLE (Part Number:HD-50390-6)** between wire harness [166A] and [166B]. See **Initial Diagnostics → DIAGNOSTIC TOOLS**.
3. Verify **ABS OVERLAY (Part Number:HD-50390-1-P1)** is in position on BOB.
4. With transmission in neutral, turn IGN ON.
5. Using **TEST CONNECTOR KIT (Part Number:HD-41404)**, test voltage between BOB terminals 9 and 10.
6. Test voltage between BOB terminals 18 and 10.
7. Is battery voltage present on both?

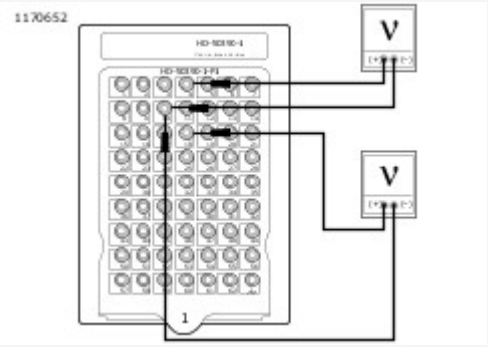

View interactive image

Figure 1.

a. **Yes.** Go to Test 9.
b. **No.** Go to Test 4.

4. ABS ECU Battery Voltage Drop Test

1. Perform a voltage drop test between battery (+) terminal and BOB terminal 9. See Initial Diagnostics → DIAGNOSTICS AND TROUBLESHOOTING → Voltage Drop.
2. Is voltage drop greater than 0.5V?

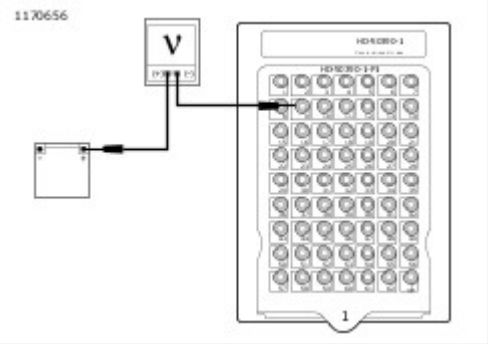

View interactive image

Figure 2.

a. **Yes.** Go to Test 6.
b. **No.** Go to Test 5.

5. ABS ECU Ground Circuit Voltage Drop Test

1. Perform a voltage drop test between BOB terminal 10 and battery (-) terminal.
2. Is voltage drop greater than 0.5V?

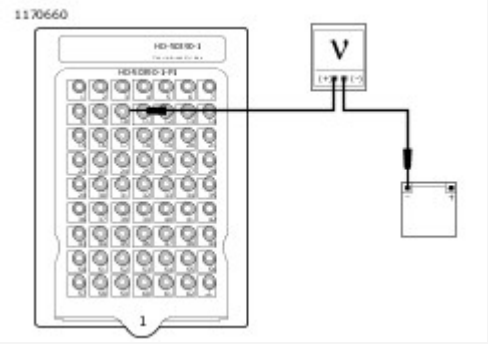

View interactive image

Figure 3.

a. **Yes.** Repair wiring between [166B] terminal 10 and battery negative.
b. **No.** Problem may be intermittent. Locate and repair bad connection. Perform [Initial Diagnostics → DIAGNOSTICS AND TROUBLESHOOTING → Wiggle Test](). If no problem is found, then continue with tests. [Go to Test 9.]()

6. Main Fuse Voltage Drop Test

1. Perform a voltage drop test between fuse block [64B] socket terminal A and battery (+).
2. Is voltage drop greater than 0.5V?

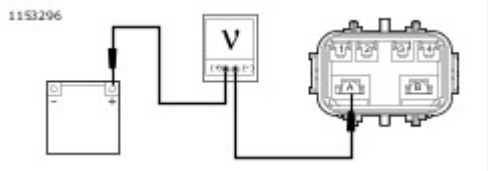

View interactive image

Figure 4.

a. **Yes.** [Go to Test 7.]()
b. **No.** Repair or replace (R) wire between [64B] socket terminal A and BCM power [259B].

7. Fuse Block Voltage Drop Test

1. Perform a voltage drop test between [64B] socket terminal B and battery (+).
2. Is voltage drop greater than 0.5V?

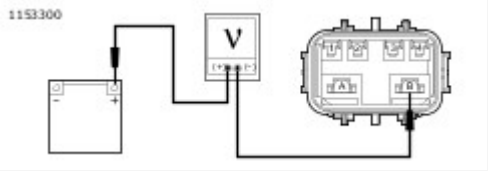

View interactive image

Figure 5.

a. **Yes.** Go to Test 8.
b. **No.** Repair or replace [64B] socket terminals A and B.

8. Fuse Block Supply Voltage Drop Test

1. Perform a voltage drop test between starter terminal 1 and battery (+).
2. Is voltage drop greater than 0.5V?
    a. **Yes.** Repair or replace (R) wire between starter terminal 1 and battery (+).
    b. **No.** Repair or replace (R) wire between starter terminal 1 and [64B] socket terminal B.

9. Repair Validation Test

1. Clear DTCs.
2. Start vehicle.
3. Run at 3000 rpm for 5 seconds.
4. Does DTC set?
    a. **Yes.** Replace ABS module.
    b. **No.** System working properly.

Table 1. DTC C0563 Diagnostic Faults

POSSIBLE CAUSES
Charging system malfunction

1. Charging System Test

1. Perform charging system tests. See **Starting and Charging → CHARGING SYSTEM**.
2. Is charging system good?
    a. **Yes.** **Go to Test 2.**
    b. **No.** Repair charging system.

2. Repair Validation Test

1. Clear DTCs.
2. Start vehicle.
3. Run at 3000 rpm for 5 seconds.
4. Did DTC reset?
    a. **Yes.** Replace ABS ECU.
    b. **No.** System working properly.

Battery voltage is monitored by the ECM on the system power terminal 16 of [78-2]. The system power is supplied to the ECM from the BCM system power terminal L3.

DTC P0562 is displayed when system power is less than 12.2V at idle and voltage does not increase when engine speed is greater than 2000 rpm.

Table 1. Code Description

DTC	DESCRIPTION
P0562	ECM voltage low

Diagnostic Tips

Any of the following conditions could cause these DTCs to set:

- The charging system is malfunctioning.
- There is excessive battery draw.
- Extended idling in heavy traffic.
- A faulty system ground is present. Low voltage generally indicates a loose wire, corroded connections, battery and/or a charging system problem.

Connector Information

For additional information about the connectors in the following diagram(s) and diagnostic procedure(s), see **Wiring → Wire Harness Connectors → General**.

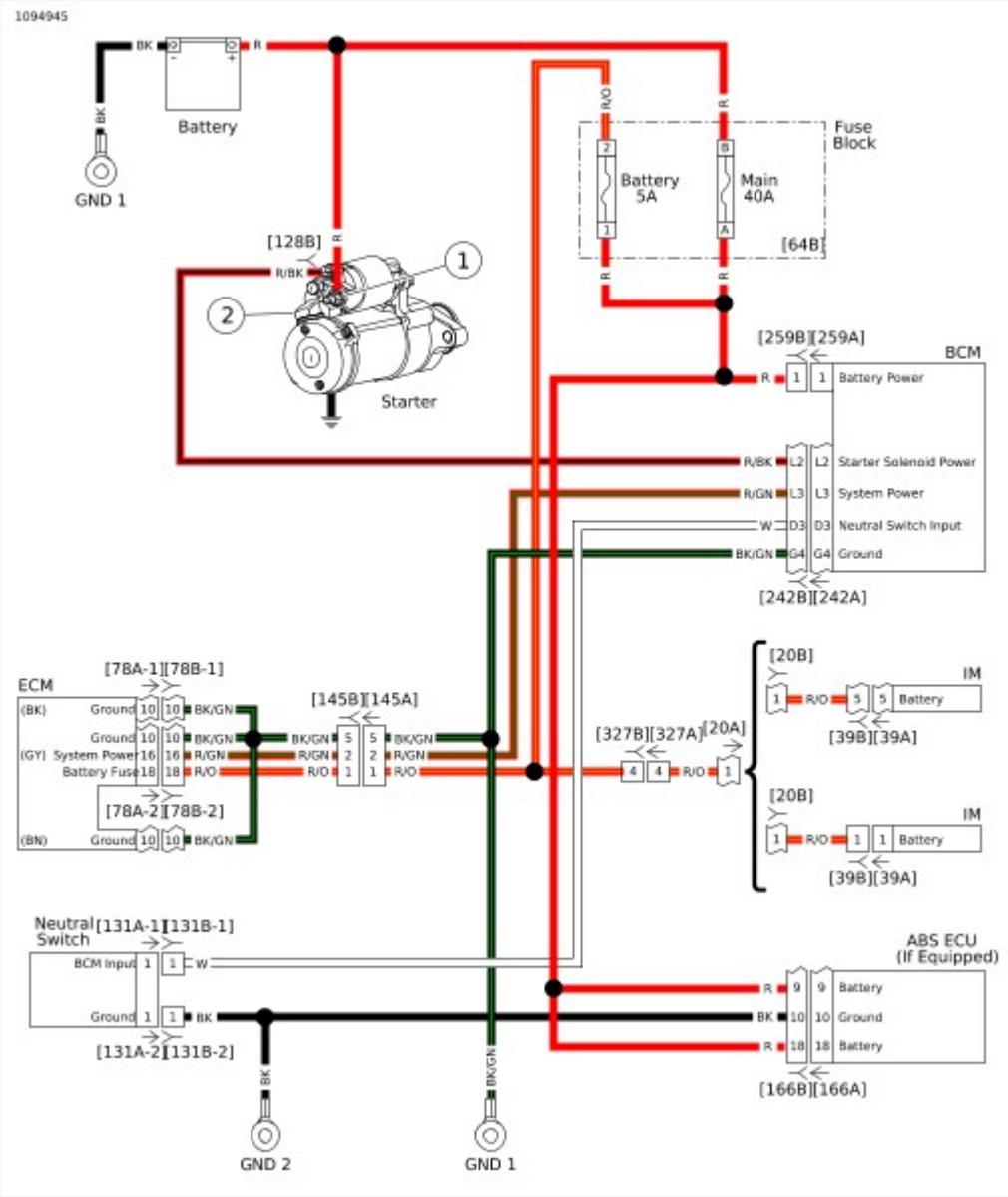

View interactive image

Figure 1. High and Low Voltage Modules

Special Tools

Description	Part Number	Qty.
TEST CONNECTOR KIT	HD-41404	1
BREAKOUT BOX	HD-50390-1	1
BCM CABLE	HD-50390-2	1
BCM OVERLAY	HD-50390-2-P	1
ECM CABLE	HD-50390-4	1
ECM OVERLAY	HD-50390-4-P	1

Table 1. DTC P0562 Diagnostic Faults

POSSIBLE CAUSES
Low battery
Open ECM ground circuit
Open ECM system power circuit

1. Battery Test

1. Perform battery test. See **Starting and Charging → BATTERY TESTING**.
2. Did battery pass test?
    a. **Yes.** **Go to Test 2.**
    b. **No.** Replace battery.

2. Charging System Test

1. Perform charging system test. See **Starting and Charging → CHARGING SYSTEM → Low or No Charging**.
2. Is charging system working properly?
    a. **Yes.** **Go to Test 3.**
    b. **No.** Repair charging system.

3. ECM Switched Voltage Test

1. Turn IGN OFF.
2. Connect **BREAKOUT BOX (Part Number:HD-50390-1)** and **ECM CABLE (Part Number:HD-50390-4)** between wiring harness [78B-1], [78B-2] and [78B-3] and ECM [78A-1], [78A-2] and [78A-3]. See **Initial Diagnostics → DIAGNOSTIC TOOLS**.
3. Verify **ECM OVERLAY (Part Number:HD-50390-4-P)** is in position on BOB.
4. Start vehicle.
5. Using **TEST CONNECTOR KIT (Part Number:HD-41404)**, test voltage between BOB [78-2] terminals 16 and 10.

6. Is voltage greater than 12.2V?

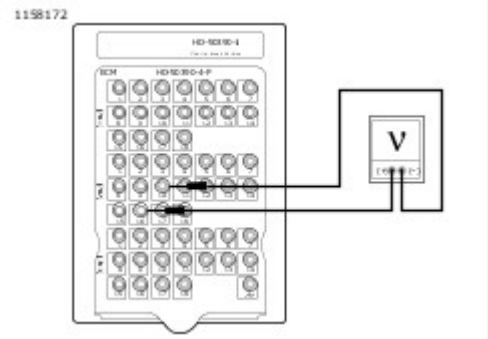

View interactive image

Figure 1.

a. **Yes.** System is working properly.
b. **No.** Go to Test 4.

4. ECM System Power Test

1. Test voltage between BOB [78-2] terminal 16 and ground.
2. Is voltage greater than 12.2V?

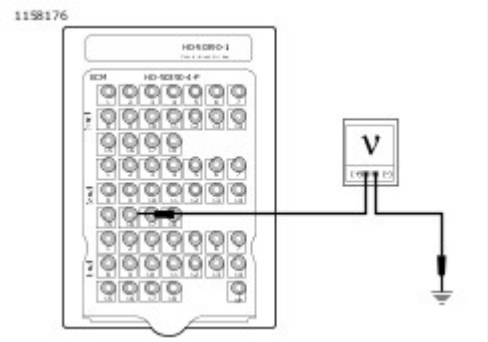

View interactive image

Figure 2.

a. **Yes.** Go to Test 5.
b. **No.** Go to Test 8.

5. ECM Ground [78-1] Circuit Test

1. Turn IGN OFF.
2. Test resistance between BOB [78-1] terminal 10 and ground.
3. Is resistance less than 0.5 ohm?

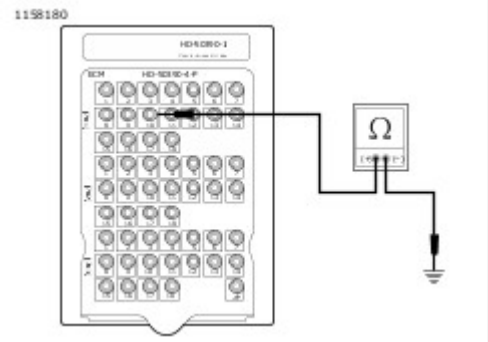

View interactive image

Figure 3.

a. **Yes.** Go to Test 6.
b. **No.** Repair wiring between ECM [78B-1] terminal 10 and ground.

6. ECM Ground [78-2] Circuit Test

1. Test resistance between BOB [78-2] terminal 10 and ground.
2. Is resistance less than 0.5 ohm?

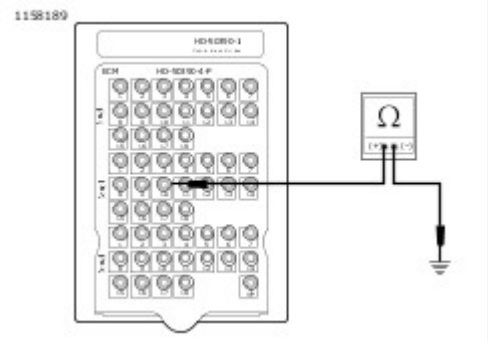

View interactive image

Figure 4.

a. **Yes.** Go to Test 7.
b. **No.** Repair wiring between ECM [78B-2] terminal 10 and ground.

7. ECM Ground [78-3] Circuit Test

1. Test resistance between BOB [78-3] terminal 10 and ground.
2. Is resistance less than 0.5 ohm?

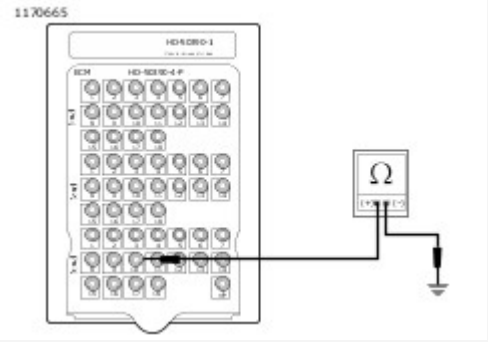

View interactive image

Figure 5.

a. **Yes.** Problem may be intermittent. Locate and repair bad connection. Perform Initial Diagnostics → DIAGNOSTICS AND TROUBLESHOOTING → Voltage Drop. If no problem is found, then continue with tests. Go to Test 13.
b. **No.** Repair wiring between ECM [78B-3] terminal 10 and ground.

8. BCM System Power Test

1. Turn IGN OFF.
2. Remove BOB.
3. Connect [78A] to [78B].
4. Connect BREAKOUT BOX (Part Number:HD-50390-1) and BCM CABLE (Part Number:HD-50390-2) between wire harness [242B] and [242A]. See Initial Diagnostics → DIAGNOSTIC TOOLS.
5. Verify BCM OVERLAY (Part Number:HD-50390-2-P) is in position on BOB.
6. Start vehicle.
7. Test voltage between BOB terminal L3 and ground.
8. Is voltage greater than 12.2V?

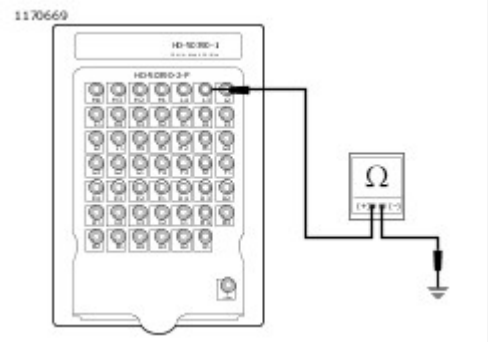

View interactive image

Figure 6.

a. **Yes.** Repair (R/GN) wire between [242B] terminal L3 and [78B-2] terminal 16.
b. **No.** Go to Test 9.

9. BCM Power Test

1. Turn IGN OFF.
2. Disconnect BCM power [259].

3. Test voltage at [259B].
4. Is battery voltage present?

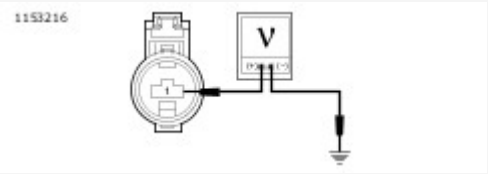

View interactive image

Figure 7.

a. **Yes.** Replace BCM.
b. **No.** Go to Test 10.

10. Main Fuse Voltage Test

1. Connect [259].
2. Turn IGN ON.
3. Leaving main fuse in place, perform a voltage drop test between fuse block [64B] socket terminal A and battery (+).
4. Is voltage drop greater than 0.5V?

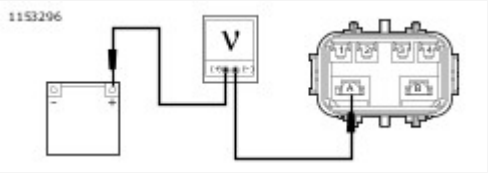

View interactive image

Figure 8.

a. **Yes.** Go to Test 11.
b. **No.** Repair or replace (R) wire between fuse block [64B] socket terminal A and [259B].

11. Fuse Block Voltage Drop Test

1. Leaving main fuse in place, perform a voltage drop test between fuse block [64B] socket terminal B and battery (+).
2. Is voltage drop greater than 0.5V?

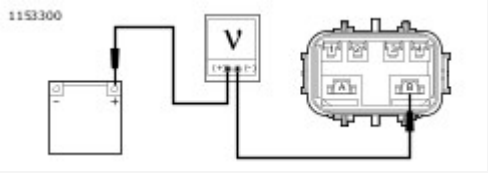

View interactive image

Figure 9.

a. **Yes.** Go to Test 12.
b. **No.** Repair or replace [64B] socket terminals A and B.

12. Fuse Block Supply Voltage Drop Test

1. Perform a voltage drop test between starter terminal 1 and battery (+).
2. Is voltage drop greater than 0.5V?
    a. **Yes.** Repair or replace (R) wire between starter terminal 1 and battery (+).
    b. **No.** Repair or replace (R) wire between starter terminal 1 and fuse block [64B] socket terminal B.

13. Repair Validation Test

1. Clear DTCs.
2. Start vehicle.
3. Run at 3000 rpm for 5 seconds.
4. Did DTC reset?
    a. **Yes.** Replace ECM.
    b. **No.** System working properly.

The RHCM is monitored by the BCM. Any communication failures between both modules sets a DTC.

These DTCs only refer to the redundant engine stop switch (W/GY) wire from the RHCM.

- DTC B2206 is set when the BCM indicates an open between [242B] terminal C4 and the engine stop switch.
- DTC B2208 is set when the BCM indicates a short to ground between [242B] terminal C4 and the engine stop switch.

Table 1. Code Description

DTC	DESCRIPTION
B2206	Run/stop switch input open/shorted high
B2208	Run/stop switch input shorted low

Connector Information

For additional information about the connectors in the following diagram(s) and diagnostic procedure(s), see [Wiring → Wire Harness Connectors → General].

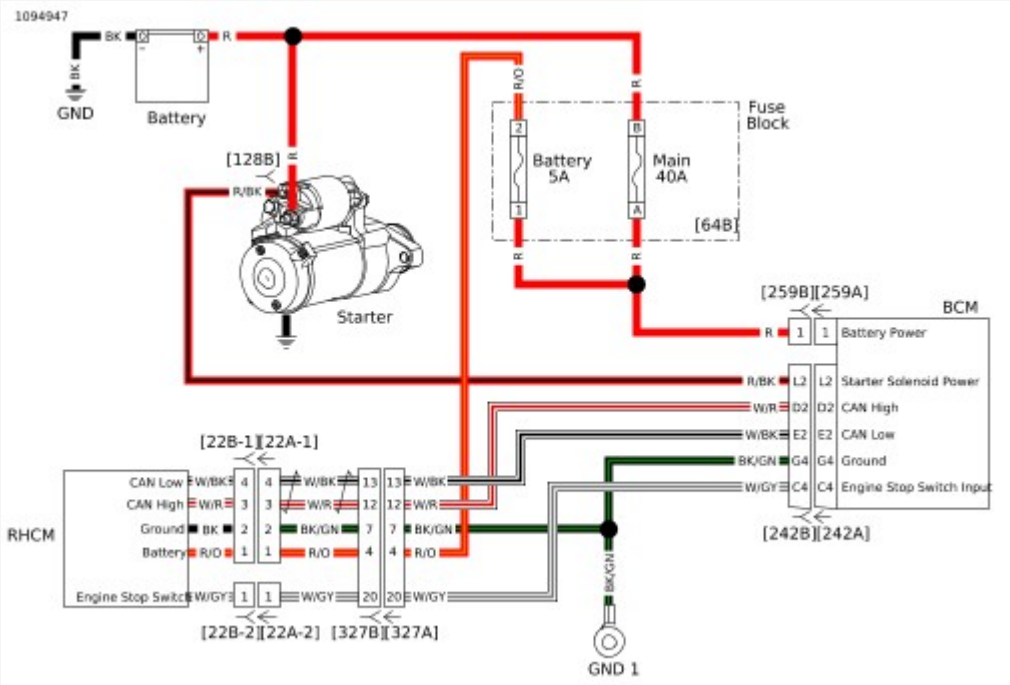

View interactive image

Figure 1. Starter

Special Tools

Description	Part Number	Qty.
TEST CONNECTOR KIT	HD-41404	1
BREAKOUT BOX	HD-50390-1	1
BCM CABLE	HD-50390-2	1
BCM OVERLAY	HD-50390-2-P	1

Table 1. DTC B2206 Diagnostic Faults

POSSIBLE CAUSES
Open in engine stop circuit

1. BCM Supply Voltage Test

1. Turn IGN OFF.
2. Disconnect RHCM [22-2].
3. Using **TEST CONNECTOR KIT (Part Number:HD-41404)**, test voltage between [22A-2] terminal 1 (W/GY) wire and ground during the first 4-5 seconds after IGN ON.
4. Turn IGN ON.
5. Is voltage present?

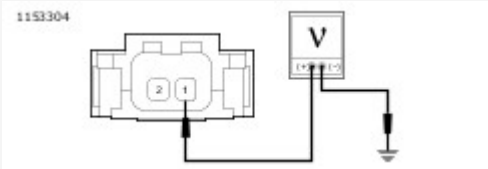

View interactive image

Figure 1.

a. **Yes.** Replace RHCM.
b. **No.** **Go to Test 2.**

2. BCM Voltage Test

1. Turn IGN OFF.
2. Connect **BREAKOUT BOX (Part Number:HD-50390-1)** and **BCM CABLE (Part Number:HD-50390-2)** between wire harness [242B] and [242A]. See **Initial Diagnostics → DIAGNOSTIC TOOLS**.
3. Verify **BCM OVERLAY (Part Number:HD-50390-2-P)** is in position on BOB.
4. During the first 4-5 seconds after IGN ON, test voltage between BOB terminal C4 and ground.
5. Is voltage present?

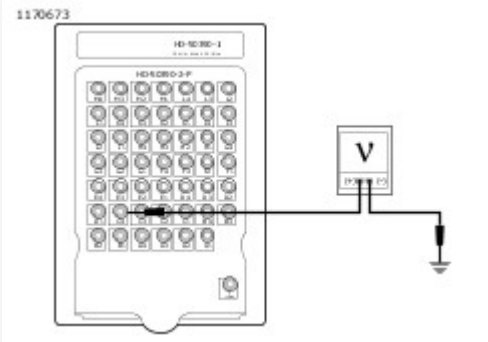

View interactive image

Figure 2.

a. **Yes.** Repair open in (W/GY) wire between [242B] terminal C4 and [22A-2].
b. **No.** Replace BCM.

Special Tools

Description	Part Number	Qty.
BREAKOUT BOX	HD-50390-1	1
BCM CABLE	HD-50390-2	1
BCM OVERLAY	HD-50390-2-P	1

Table 1. DTC B2208 Diagnostic Faults

POSSIBLE CAUSES
Short to ground in engine stop circuit

1. BCM to Ground Continuity Test

1. Turn IGN OFF.
2. Connect **BREAKOUT BOX (Part Number:HD-50390-1)** and **BCM CABLE (Part Number:HD-50390-2)** to wire harness [242B], leaving [242A] disconnected. See **Initial Diagnostics → DIAGNOSTIC TOOLS**.
3. Verify **BCM OVERLAY (Part Number:HD-50390-2-P)** is in position on BOB.
4. Test continuity between BOB terminal C4 and ground.
5. Is continuity present?

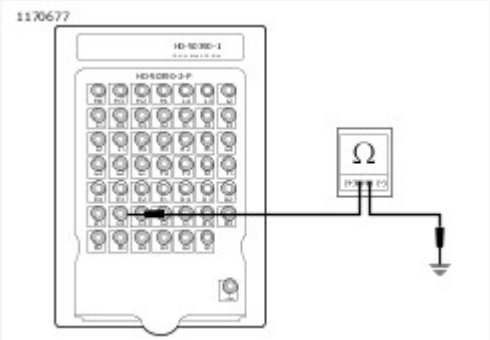

View interactive image

Figure 1.

a. **Yes.** **Go to Test 2.**
b. **No.** Replace BCM.

2. RHCM to Ground Continuity Test

1. Disconnect RHCM [22A-2].
2. Test continuity between BOB terminal C4 and ground.
3. See **Figure 1**. Is continuity present?
   a. **Yes.** Repair short to ground between [242B] terminal C4 and [22A-2] (W/GY) wire.
   b. **No.** Replace RHCM.

See Figure 1. Battery voltage is constantly monitored by the BCM and IM. Any voltage readings outside of normal parameters set a DTC.

DTC B2271

The BCM monitors [259] terminal 1 for battery power.

DTC B2271 is displayed when battery voltage is less than 9.0V.

DTC B2272

The BCM monitors [259] terminal 1 and the speedometer monitors terminal 5 for battery power.

- DTC B2272 (BCM) is displayed when battery voltage is greater than 16.1V for longer than 5 seconds.
- DTC B2272 (Speedometer) is displayed when battery voltage is greater than 16.0V for longer than 5 seconds.

NOTE

ECM, ABS, and/or BCM may also set a battery voltage DTC.

Table 1. Code Description

DTC	DESCRIPTION
B2271	BCM voltage low
B2272	BCM/speedometer voltage high

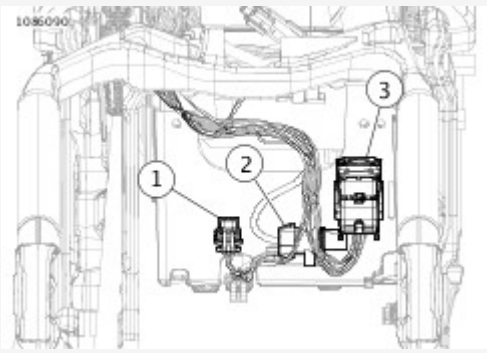

View interactive image

1	Security siren [142]
2	BCM power [259]
3	BCM [242]

Figure 1. Front of Rear Tire

Diagnostic Tips

High voltage DTC may set when the vehicle is placed on an unapproved constant current battery charger, on fast charge, for a long period of time.

Connector Information

For additional information about the connectors in the following diagram(s) and diagnostic procedure(s), see **Wiring → Wire Harness Connectors → General**.

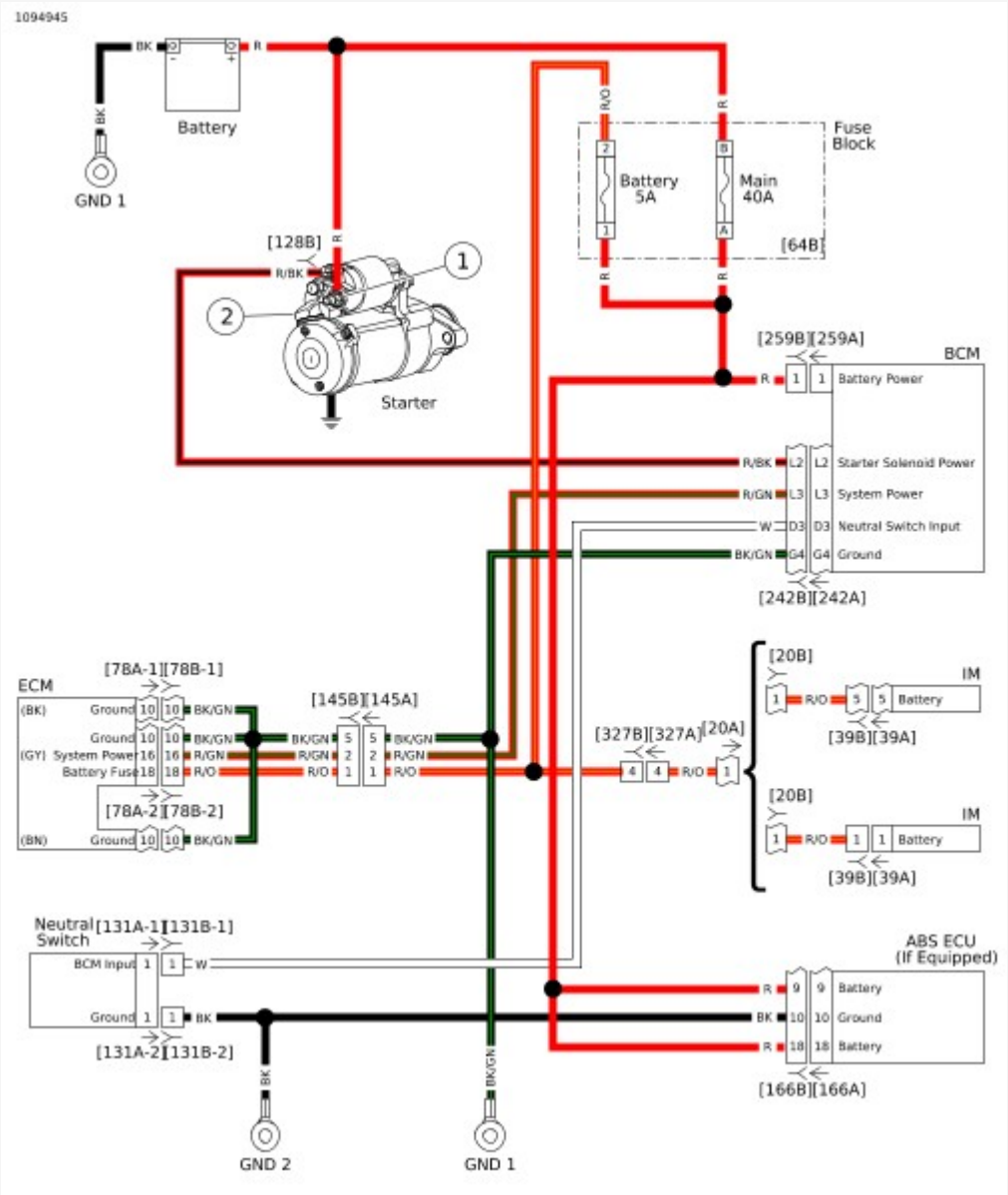

View interactive image

Figure 2. High and Low Voltage Modules

Special Tools

Description	Part Number	Qty.
TEST CONNECTOR KIT	HD-41404	1

Table 1. DTC B2271 Diagnostic Faults

POSSIBLE CAUSES
Charging system malfunction
BCM power circuit
Open in battery power circuit

1. Battery Test

1. Perform battery test. See **Starting and Charging → BATTERY TESTING**.
2. Did battery pass test?
   a. **Yes.** **Go to Test 2.**
   b. **No.** Charge or replace battery as needed. Verify repair.

2. Charging System Test

1. Perform charging system test. See **Starting and Charging → CHARGING SYSTEM → Low or No Charging**.
2. Is charging system working properly?
   a. **Yes.** **Go to Test 3.**
   b. **No.** Repair charging system. **Go to Test 7.**

3. BCM Power Test

1. Turn IGN OFF.
2. Disconnect BCM power [259].
3. Using **TEST CONNECTOR KIT (Part Number:HD-41404)**, test voltage between [259B] to ground.
4. Is battery voltage present?

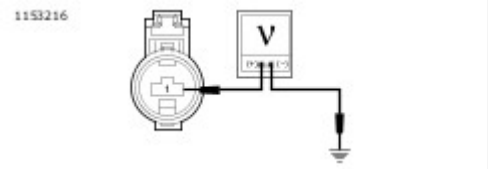

View interactive image

Figure 1.

   a. **Yes.** **Go to Test 7.**
   b. **No.** **Go to Test 4.**

4. Main Fuse Voltage Test

1. Perform a voltage drop test between fuse block [64B] socket terminal A and battery (+).
2. Is voltage drop greater than 0.5V?

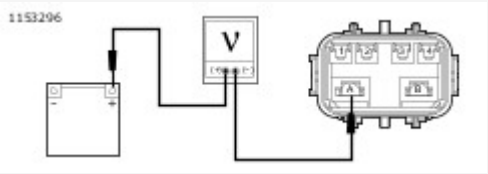

View interactive image

Figure 2.

   a. **Yes.** Go to Test 5.
   b. **No.** Repair or replace (R) wire between fuse block [64B] socket terminal A and [259B].

5. Fuse Block Voltage Test

1. Perform a voltage drop test between fuse block [64B] socket terminal B and battery (+).
2. Is voltage drop greater than 0.5V?

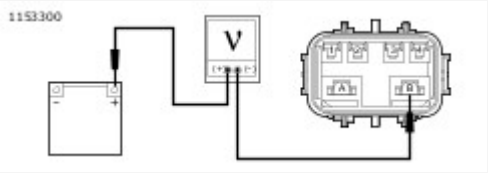

View interactive image

Figure 3.

   a. **Yes.** Go to Test 6.
   b. **No.** Repair or replace fuse block [64B] socket terminals A and B.

6. Fuse Block Supply Voltage Test

1. See Initial Diagnostics → DIAGNOSTICS AND TROUBLESHOOTING → Voltage Drop → To Starter Solenoid Battery Terminal. Perform a voltage drop test between starter terminal 1 and battery (+).
2. Is voltage drop greater than 0.5V?
   a. **Yes.** Repair or replace (R) wire between starter terminal 1 and battery (+).
   b. **No.** Repair or replace (R) wire between starter terminal 1 and fuse block [64B] socket terminal B.

7. Repair Validation Test

1. Clear DTCs.
2. Start vehicle.

3. Run at 3000 rpm for 5 seconds.
4. Did DTC reset?
    a. **Yes.** Replace BCM.
    b. **No.** System working properly.

Table 1. DTC B2272 Diagnostic Faults

POSSIBLE CAUSES
Charging system malfunction

1. Charging System Test

1. Perform charging system tests. See **Starting and Charging → CHARGING SYSTEM → Overcharging**.
2. Is charging system good?
    a. **Yes.** **Go to Test 2.**
    b. **No.** Repair charging system.

2. Repair Validation Test

1. Clear DTCs.
2. Start vehicle.
3. Run at 3000 rpm for 5 seconds.
4. Did DTC reset?
    a. **Yes, DTC set by speedometer.** Replace speedometer.
    b. **Yes, DTC set by BCM.** Replace BCM.
    c. **No.** System working properly.

See Figure 1. The IM contains several indicators. These indicators include the check engine, security, low battery, low fuel lamps and ABS and cruise control (if equipped).

Trip Odometer Reset Switch Operation

Pressing the trip odometer reset switch, located on the left hand controls, provides the following functions:

- Change the odometer display between total mileage, trip odometer A and trip B, fuel remaining, 12/24 hour clock and tachometer.
- Reset the trip odometer (press and hold 2-3 seconds).
- Gain access to self-diagnostic mode and clear diagnostic codes. See Initial Diagnostics → Initial Diagnostics → Odometer Self-Diagnostics.
- Holding the trip switch for 2 seconds will put the vehicle in accessory mode.

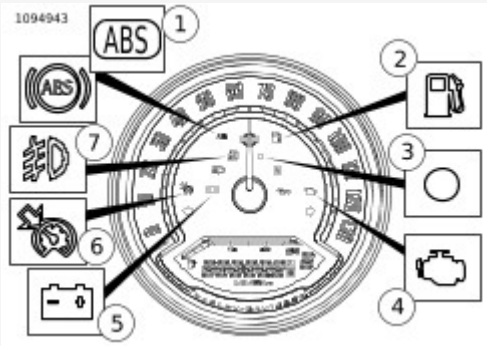

View interactive image

1	ABS (km/h ABS icon lamp also shown)
2	Low fuel
3	Security
4	Check engine
5	Battery
6	Cruise enabled
7	Aux lighting

Figure 1. Indicator Lamps (Except FXBB, FXBR)

The odometer mileage is permanently stored and will not be lost when electrical power is turned off or disconnected. The trip odometer reset switch allows switching between the odometer, trip odometer and fuel range displays.

To zero the trip odometer, have the odometer display visible, press and keep the trip odometer reset switch depressed. The trip odometer mileage will be displayed for 2-3 seconds and then the trip mileage will return to zero.

The vehicle speed sensor is mounted at the back of the transmission case. The VSS is a Hall-Effect sensor that is triggered by the gear teeth of fifth gear on the transmission mainshaft.

The output from the sensor is a series of pulses that are interpreted by ECM, converted into CAN bus data then sent to the IM. The IM uses the data to control the position of the IM needle. The data message is also used by the BCM for turn signal cancellation.

The IM monitors direct inputs from sensors and switches, along with receiving information from the other modules over the CAN bus lines. It sets codes when the parameters for the inputs are out of range.

The fuel level is monitored by the ECM [78-1] at terminal 12 (Y/W) wire. The low fuel warning lamp serves two functions. It is used to indicate a low fuel condition and to communicate a circuit problem with the fuel sender circuit. The IM will flash the low fuel warning lamp on and off at a steady rate when a current fuel level sender DTC is set.

- If the voltage on terminal 12 exceeds the lower limit for greater than or equal to 15 seconds, a DTC P0462 will be set.
- If the voltage on terminal 12 exceeds the upper limit (or is open) for greater than or equal to 15 seconds, a DTC P0463 will set.

Table 1. Code Description

DTC	DESCRIPTION
P0462	Fuel sender shorted low
P0463	Fuel sender shorted high/open

As the fuel level changes, the resistance of the sender changes. As the resistance of the sender changes, the voltage on the (Y/W) wire changes.

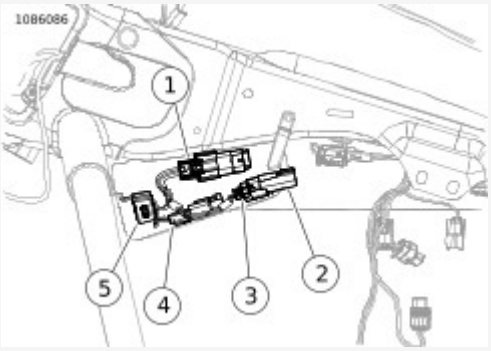

View interactive image

1	USB caddy interconnect [329]
2	USB [264]
3	Fuel pump [141]
4	ET sensor [90]

Figure 1. Under Fuel Tank Left Side

Connector Information

For additional information about the connectors in the following diagram(s) and diagnostic procedure(s), see **Wiring → Wire Harness Connectors → General**.

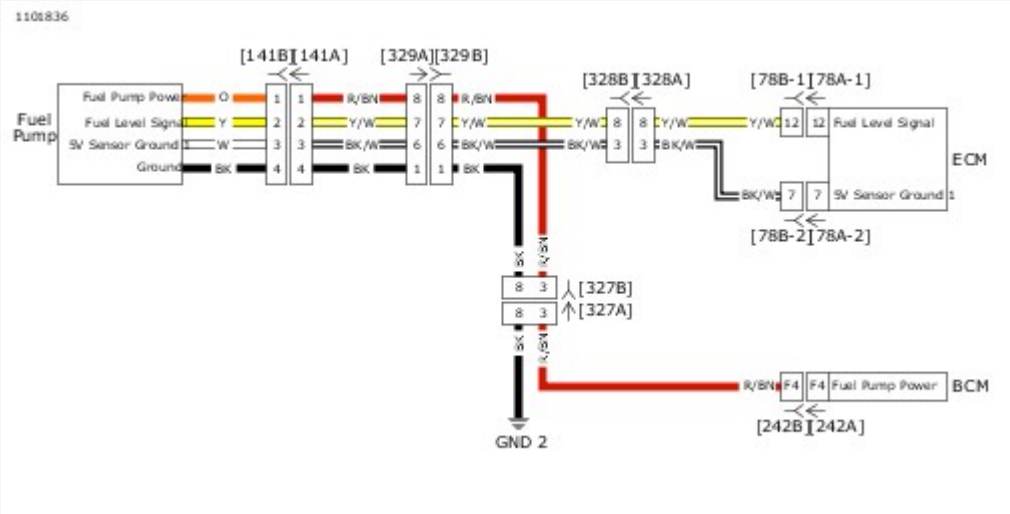

View interactive image

Figure 2. Fuel Sensor Circuit

Special Tools

Description	Part Number	Qty.
TEST CONNECTOR KIT	HD-41404	1

Table 1. DTC P0462 Diagnostic Faults

POSSIBLE CAUSES
Short to ground in fuel level sender circuit
Fuel level sender assembly malfunction

1. Fuel Level Circuit Short to Ground Test

1. Turn IGN OFF.
2. Disconnect the fuel pump [141] and ECM [78-1].
3. Using TEST CONNECTOR KIT (Part Number:HD-41404), test for continuity between [141A] terminal 2 and ground.
4. Is continuity present?

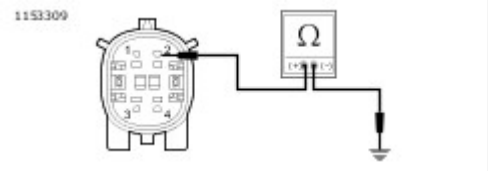

View interactive image

Figure 1.

a. **Yes.** Repair short to ground in the (Y/W) wire.
b. **No.** Go to Test 2.

2. Fuel Level Sender Resistance Test

1. Measure the resistance of fuel level sender between [141B] terminals 2 and 3.
2. Is the resistance between 50-260 ohms?

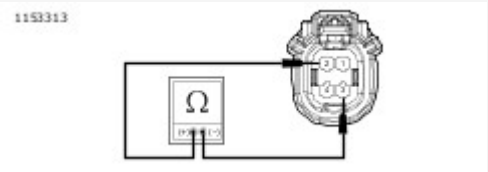

View interactive image

Figure 2.

a. **Yes.** Replace ECM.

b. **No.** Replace the fuel pump assembly.

Special Tools

Description	Part Number	Qty.
TEST CONNECTOR KIT	HD-41404	1
BREAKOUT BOX	HD-50390-1	1
ECM CABLE	HD-50390-4	1

Table 1. DTC P0463 Diagnostic Faults

POSSIBLE CAUSES
Short to voltage in fuel level sensor circuit
Fuel level sender malfunction
Open fuel level sensor circuit

1. Fuel Level Circuit Short to Voltage Test

1. Disconnect ECM [78-1].
2. Using TEST CONNECTOR KIT (Part Number:HD-41404), test for voltage between [141A] terminal 2 and ground.
3. Turn IGN ON.
4. Is voltage present?

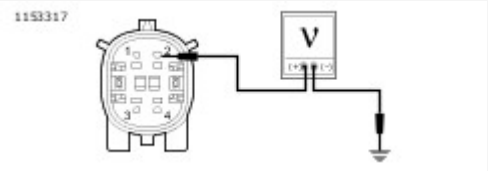

View interactive image

Figure 1.

a. **Yes.** Repair short to voltage in (Y\W) wire.
b. **No.** Go to Test 2.

2. Fuel Level Circuit Open Test

1. Turn IGN OFF.
2. Connect BREAKOUT BOX (Part Number:HD-50390-1) and ECM CABLE (Part Number:HD-50390-4) to wiring harness [78B-1], [78B-2] and [78B-3], leaving ECM [78A-1], [78A-2] and [78A-3] disconnected.
3. Measure resistance between BOB [78B-1] terminal 12 and [141A] terminal 2.
4. Is resistance less than 0.5 ohms?

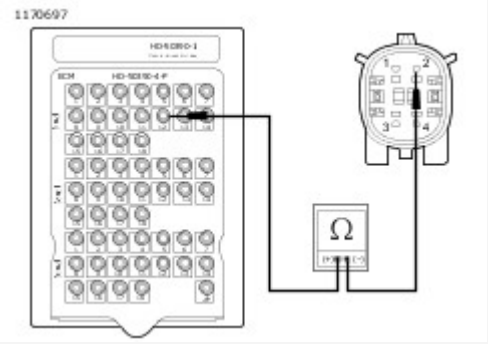

View interactive image

Figure 2.

a. **Yes.** [Go to Test 3.]
b. **No.** Repair open in (Y\W) wire.

3. Fuel Level Sender Resistance Test

1. Measure the resistance of the fuel level sender between [141B] terminals 2 and 3.
2. Is the resistance between 50-260 ohms?

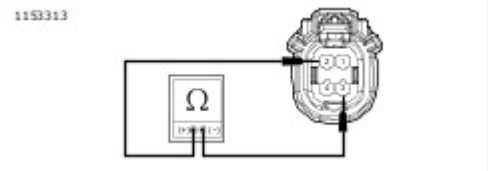

View interactive image

Figure 3.

a. **Yes.** Replace ECM.
b. **No.** Replace fuel pump assembly.

Special Tools

Description	Part Number	Qty.
DIGITAL TECHNICIAN II	HD-48650	1

Trip Odometer Reset Switch Closed

DTC B2255 will be set if trip odometer reset switch is closed for more than 2 minutes. This code can be set by the IM or the BCM. It will normally be set by both if there is a concern with the trip odometer reset switch.

Odometer self-diagnostics will not function if the switch is stuck. It will not be possible to toggle the switch to navigate through the different diagnostic steps in the odometer.

- A stuck trip odometer reset switch disables odometer self-diagnostics.
- If **DIGITAL TECHNICIAN II (Part Number:HD-48650)** is connected to the DLC [91] and communicating with the vehicle then the odometer self-diagnostics will not function properly.
- Disconnect **DIGITAL TECHNICIAN II (Part Number:HD-48650)** before entering odometer self-diagnostics.

Table 1. Code Description

DTC	DESCRIPTION
B2255	Trip switch stuck

Table 1. Trip Odometer Functions Inoperative Diagnostic Faults: DTC B2255

POSSIBLE CAUSES
Trip odometer reset switch malfunction

1. Trip Switch Test

1. Check trip switch for damage or obstruction.
2. Is switch moving freely?
    a. **Yes.** Go to Test 2.
    b. **No.** Remove obstruction. If switch will not move freely replace LHCM.

2. Odometer Test

1. Turn IGN ON.
2. Press and release trip odometer reset switch.
3. Does odometer cycle through different odometer counters?
    a. **Yes.** Go to Test 3.
    b. **No.** Go to Test 4.

3. IM "WOW" Test

1. Turn IGN OFF.
2. Turn IGN ON while pressing trip odometer reset switch.
3. Does IM needle sweep its full range of motion?
    a. **Yes.** System functioning properly. Test for intermittent condition. See Initial Diagnostics → DIAGNOSTICS AND TROUBLESHOOTING → Wiggle Test.
    b. **No.** Replace IM.

4. LHCM Test

1. Operate other switches on LHCM.
2. Do any switches operate?
    a. **Yes.** Replace LHCM.
    b. **No.** See Serial Data → NO VEHICLE POWER OR LOST COMMUNICATION DTCS → Left Hand Controls Inoperative: DTC U0141.

See Figure 1 and Figure 2 (all other models similar). The IM receives battery power at terminal 1 or 5. This is supplied through the battery fuse located in fuse block [64]. When the ACC power is on, the IM illuminates the backlighting and the odometer.

When IGN power is on, the IM illuminates the check engine, low fuel level, security and ABS lamp (if equipped). The backlighting, odometer, neutral lamp and low oil lamp also illuminate with the IGN ON.

The IM sets a DTC B1200 if it detects an internal malfunction.

Table 1. Code Description

DTC	DESCRIPTION
B1200	Internal fault
B1201	Internal fault - default cal

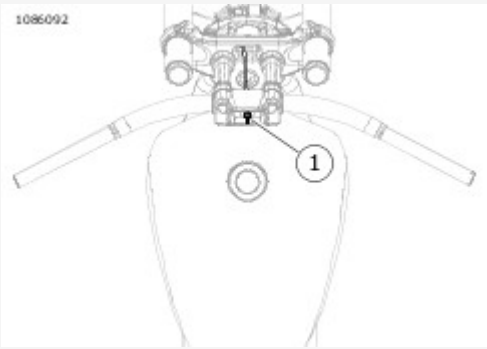

View interactive image

1	IM [39]

Figure 1. IM: FXBB, FXBR

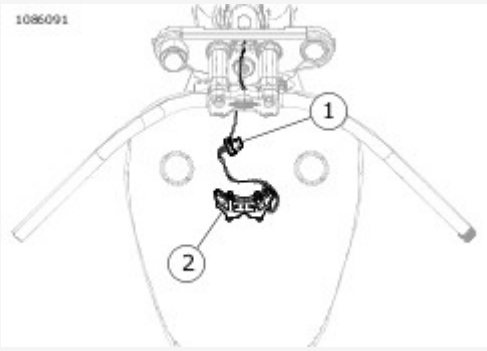

View interactive image

1	IM [39]
2	Indicator lamps

Figure 2. IM: FLDE, FLHC/S, FLSL

Connector Information

For additional information about the connectors in the following diagram(s) and diagnostic procedure(s), see [Wiring → Wire Harness Connectors → General].

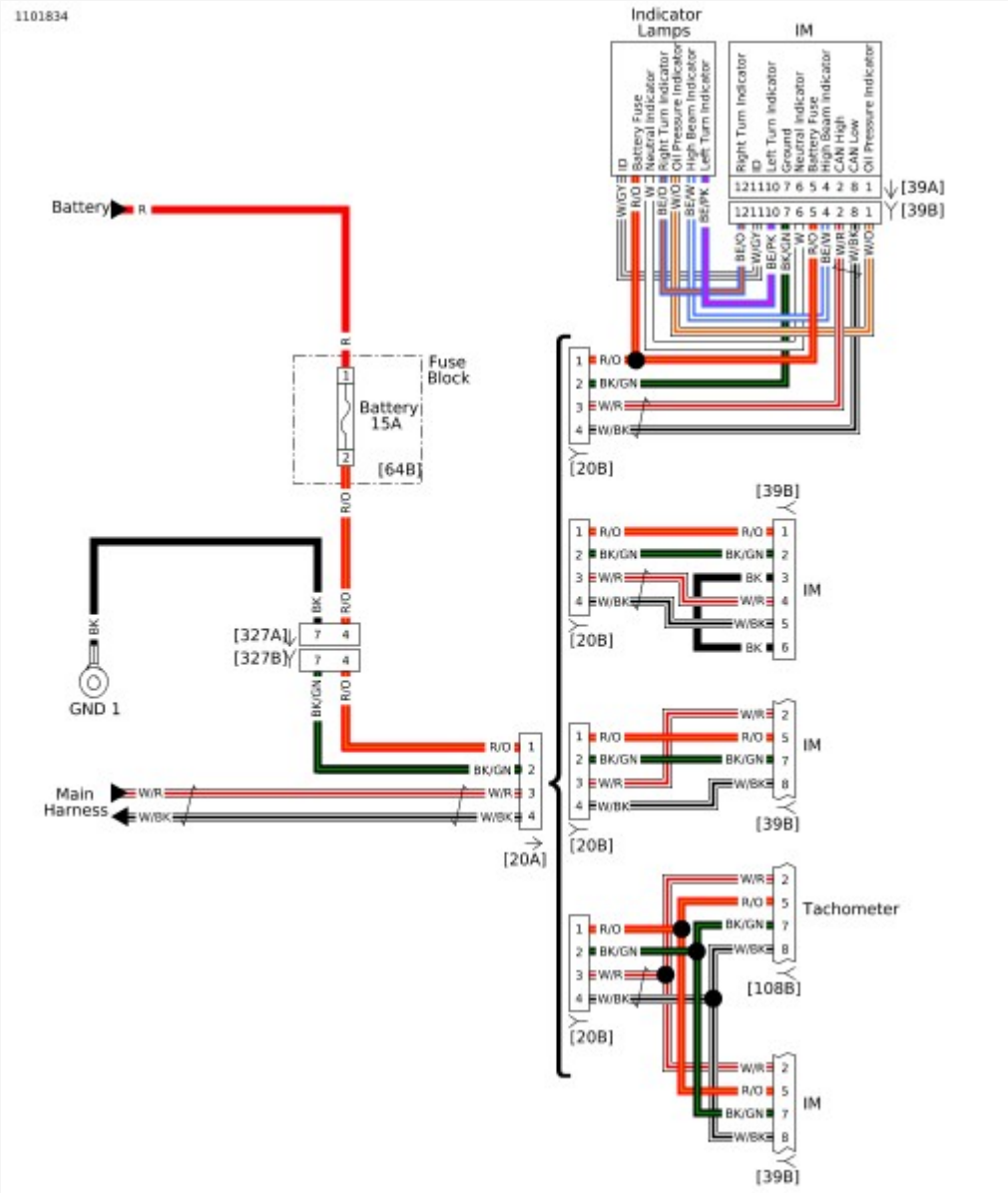

View interactive image

Figure 3. IM Power Circuit

Special Tools

Description	Part Number	Qty.
TEST CONNECTOR KIT	HD-41404	1
BREAKOUT BOX	HD-42682	1
BREAKOUT BOX ADAPTERS	HD-46601	1

Table 1. No Instrument Power Diagnostic Faults

POSSIBLE CAUSES
Open battery circuit
Open ground circuit
Open in CAN bus circuit to IM

1. Battery Circuit Test

1. Turn IGN ON.
2. Observe headlamp.
3. Does headlamp or tail lamp illuminate?
    a. **Yes.** Go to Test 2.
    b. **No.** See Serial Data → NO VEHICLE POWER OR LOST COMMUNICATION DTCS → No Vehicle Power: DTC U0140.

2. Accessory Function Test

1. Attempt to start vehicle.
2. Does engine crank?
    a. **Yes.** Go to Test 3.
    b. **No.** See Serial Data → Odometer Self-Diagnostic Inoperative: DTC U0001, U0011, B2274.

3. IM Connector Test

1. Disconnect IM [39].
2. Inspect [39].
3. Is [39] a 12 place connector?
    a. **Yes.** Go to Test 4.
    b. **No.** Go to Test 5.

4. Battery Circuit to IM Test

1. Turn IGN OFF.

2. Connect **BREAKOUT BOX ADAPTERS (Part Number:HD-46601)** to [39]. Attach connectors from **BREAKOUT BOX (Part Number:HD-42682)** to harness adapters leaving [39A] disconnected. See **Initial Diagnostics → DIAGNOSTIC TOOLS**.
3. Using **TEST CONNECTOR KIT (Part Number:HD-41404)**, test voltage between BOB terminal 5 and ground.
4. Is battery voltage present?

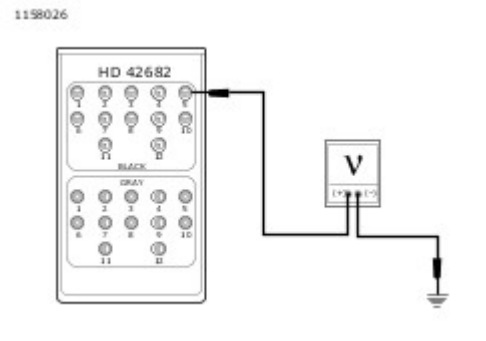

View interactive image

Figure 1.

a. **Yes.** **Go to Test 6.**
b. **No.** Repair open in (R/O) wire.

5. IM Battery Circuit Test

1. Using **TEST CONNECTOR KIT (Part Number:HD-41404)**, test voltage between [39B] terminal 1 and ground.
2. Is battery voltage present?

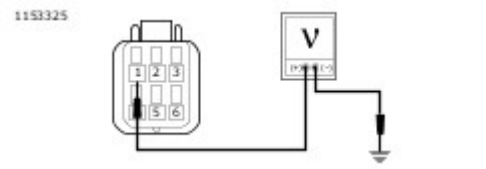

View interactive image

Figure 2.

a. **Yes.** **Go to Test 7.**
b. **No.** Repair open in (R/O) wire.

6. Ground Circuit Test

1. Test resistance between BOB terminal 7 and ground.
2. Is resistance less than 0.5 ohm?

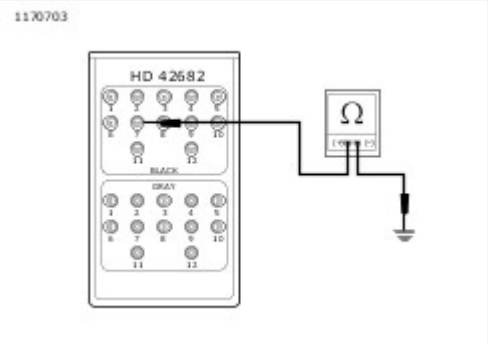

View interactive image

Figure 3.

a. **Yes.** Replace IM.
b. **No.** Repair open in (BK/GN) wire.

7. IM Ground Circuit Test

1. Test resistance between [39B] terminal 2 and ground.
2. Is resistance less than 0.5 ohm?

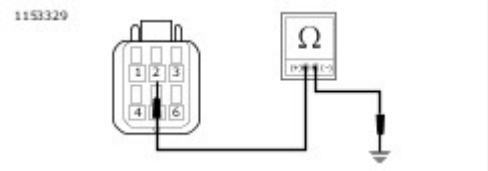

View interactive image

Figure 4.

a. **Yes.** Replace IM.
b. **No.** Repair open in (BK/GN) wire.

Special Tools

Description	Part Number	Qty.
TEST CONNECTOR KIT	HD-41404	1
BREAKOUT BOX	HD-42682	1
BREAKOUT BOX ADAPTERS	HD-46601	1

Table 1. DTC B1200 Diagnostic Faults

POSSIBLE CAUSES
Open in IM battery power circuit
Open in IM ground circuit

1. IM Connector Test

1. 1. Disconnect IM [39].
2. Inspect [39].
3. Is [39] a 12 place connector?
    a. **Yes.** Go to Test 2.
    b. **No.** Go to Test 4.

2. IM Voltage Test

1. Turn IGN OFF.
2. Connect BREAKOUT BOX (Part Number:HD-42682) and BREAKOUT BOX ADAPTERS (Part Number:HD-46601) to wiring harness [39B], leaving [39A] disconnected. See Initial Diagnostics → DIAGNOSTIC TOOLS.
3. Using TEST CONNECTOR KIT (Part Number:HD-41404), test voltage between BOB terminal 5 and ground.
4. Is battery voltage present?

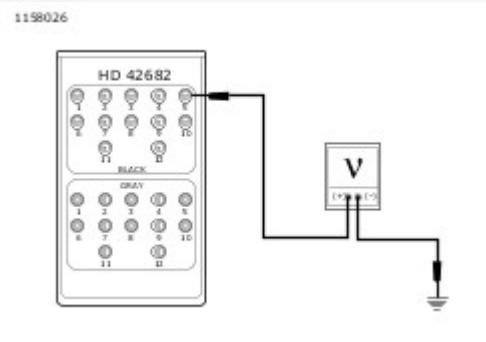

View interactive image

Figure 1.

a. **Yes.** Go to Test 3.
b. **No.** Repair open in (R/O) wire.

3. IM Ground Test

1. Test voltage between BOB terminals 5 and 7.
2. Is battery voltage present?

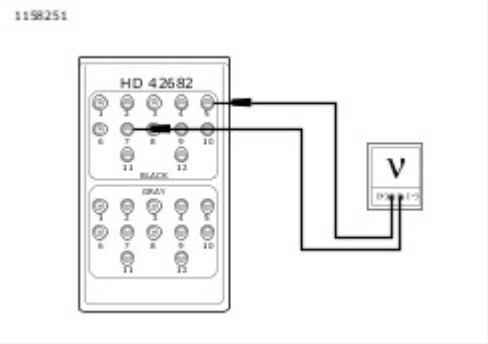

View interactive image

Figure 2.

a. **Yes.** Replace IM.
b. **No.** Repair open in ground circuit.

4. Voltage to IM Test

1. Using [TEST CONNECTOR KIT (Part Number:HD-41404)](), test voltage between [39B] terminal 1 and ground.
2. Is battery voltage present?

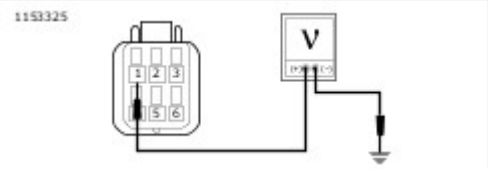

View interactive image

Figure 3.

a. **Yes.** [Go to Test 5.]()
b. **No.** Repair open in (R/O) wire.

5. Ground to IM Test

1. Test voltage between [39B] terminals 1 and 2.
2. Is battery voltage present?

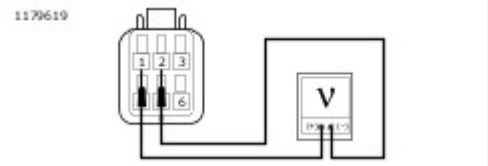

View interactive image

Figure 4.

a. **Yes.** Replace IM.
b. **No.** Repair open in ground circuit.

Special Tools

Description	Part Number	Qty.
DIGITAL TECHNICIAN II	HD-48650	1

See Figure 1. The battery, check engine, security, cruise control, ABS and low fuel indicators are located in the IM. The other indicators are located in the indicator bar (if equipped) separate from the IM.

Table 1. Code Description

DTC	DESCRIPTION
B1214	External indicator bar short to battery
B1215	External indicator bar open load
B1216	External indicator bar short to ground
P0522	Engine oil pressure sensor/switch shorted low
P0523	Engine oil pressure sensor/switch shorted high/open

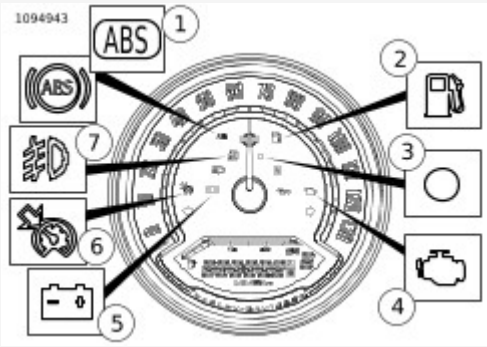

View interactive image

1	ABS (km/h ABS icon lamp also shown)
2	Low fuel
3	Security
4	Check engine
5	Battery
6	Cruise enabled
7	Aux lighting

Figure 1. Indicator Lamps (Except FXBB, FXBR)

ABS Indicator

The IM illuminates the ABS indicator when the following occurs:

- The EHCU detects an ABS disabling malfunction. The EHCU sends a serial data message to the instrument requesting illumination.
- The IM performs a bulb check.
- The IM detects a loss of communication with the EHCU.
- See Figure 2. The ABS light may flash when the IGN is turned on. This will continue until the vehicle is driven to verify WSS operation.

The EHCU sends a message to the instrument when a malfunction that disables ABS operation is detected. Depending on the fault, the ABS indicator may stay on even after the malfunction is corrected. The indicator will not go off until the vehicle is operated at speeds greater than 16 km/h (10 mph). It is important to verify that this is not the cause of an ABS indicator, which is illuminated when no DTCs are set, before attempting to diagnose other possible causes.

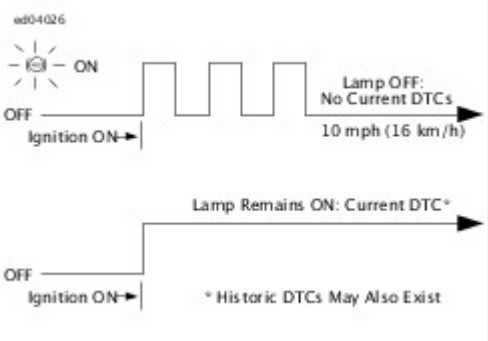

View interactive image

Figure 2. ABS Lamp Operation

Security Lamp

See Figure 3. When the IGN is turned ON, the security lamp will illuminate for approximately four seconds and then turn off. The BCM and ECM controls the security lamp by sending a CAN message to the IM. The ECM uses the security lamp for non-emissions related DTCs. After the security lamp turns off following the first four second illumination period, one of two events may occur.

- The lamp remains off. This indicates there are no current or historic DTCs currently detected by the BCM or ECM.
- If the lamp illuminates again and remains lit, a current or historic DTC exists.

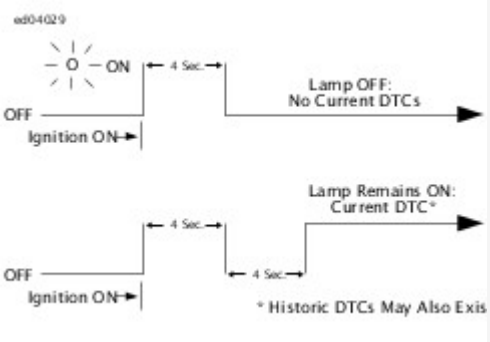

View interactive image

Figure 3. Security Lamp Operation

Check Engine Lamp

When the IGN is ON, the check engine lamp will illuminate and stay illuminated until the engine is started. After engine startup, one of two events may occur.

- See Figure 4. The lamp turns off. This indicates there are no current or historic stored DTCs currently detected by the ECM.
- If the lamp remains illuminated, a current or historic DTC exists.

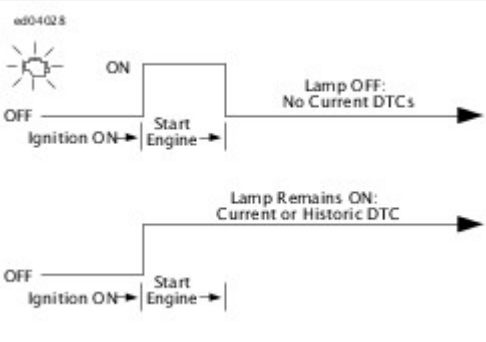

View interactive image

Figure 4. Check Engine Lamp

Low Battery Lamp

The BCM sends a message to the IM to control the low battery lamp. The IM will turn the lamp on if the BCM identifies a low voltage condition on [259] terminal 1.

Low Fuel Indicator

The low fuel indicator is controlled at terminal 12 (Y/W) of the ECM. When the fuel drops below 3.79 L (1.0 USgal), it signals the IM to activate the low fuel lamp. The low fuel lamp will also flash on and off at a steady rate if there is a problem with the circuit. The low fuel indicator can be enabled on and off using DIGITAL TECHNICIAN II (Part Number:HD-48650). Verify the vehicle is properly configured when diagnosing the low fuel indicator.

The low fuel lamp will not turn off until there is sufficient fuel in the tank, the ignition switch has been turned off and back on, and the vehicle has begun forward speed.

Neutral Indicator

The neutral indicator is controlled through the (W) wire connected to the IM. When the transmission is in neutral, the neutral switch closes and supplies a ground to the BCM on terminal D3. The BCM then sends a message to the IM over the CAN bus indicating the transmission is in neutral. The IM supplies ground to the neutral indicator causing it to illuminate.

Oil Pressure Indicator

The oil pressure indicator is connected to the ECM at terminal 12. The switch opens when oil pressure is low. The ECM then sends a message to the IM over the CAN bus indicating the oil pressure is low. The IM supplies ground to the oil pressure indicator causing it to illuminate.

Turn Signal Indicators

The turn signal indicators are controlled by the IM. When the BCM receives a CAN bus message from the left or right turn signal switch it flashes the correct turn signals. At the same time the BCM sends a message to the IM over the CAN bus indicating which

turn signal to operate. The IM supplies ground to the corresponding turn signal indicator causing it to illuminate.

High Beam Indicator

This circuit is grounded by the IM when the headlamp switch is placed in the high beam position. In the high position, a message is sent over the CAN bus to the IM and the BCM. The IM controls the indicator and the BCM controls the headlamp.

Diagnostic Tips

After replacing a component in the fuel circuit, verify the tank is full of fuel. Remove the main fuse for 2 minutes and install to turn low fuel lamp off.

Some aftermarket fuel gauges not made by Harley-Davidson may cause the fuel circuit to report inaccurate readings.

Connector Information

For additional information about the connectors in the following diagram(s) and diagnostic procedure(s), see [Wiring → Wire Harness Connectors → General](#).

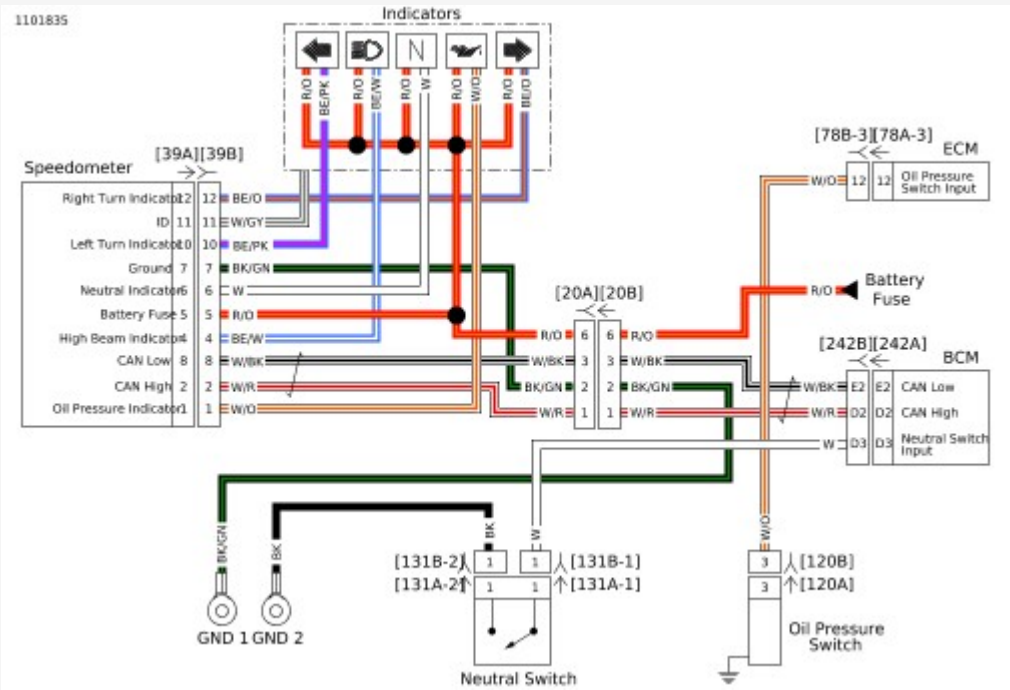

View interactive image

Figure 5. Indicator Circuit

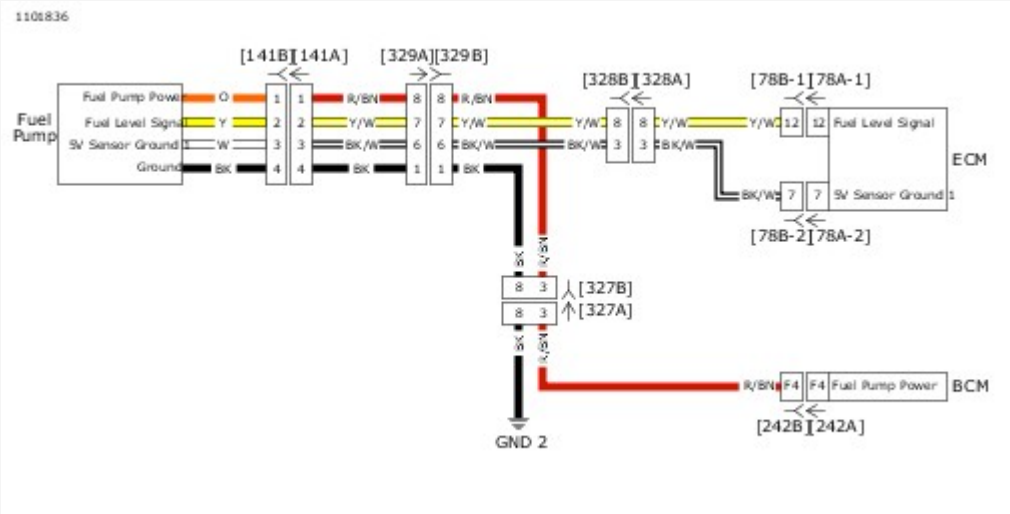

View interactive image

Figure 6. Fuel Sensor Circuit

Special Tools

Description	Part Number	Qty.
TEST CONNECTOR KIT	HD-41404	1
BREAKOUT BOX	HD-42682	1
BREAKOUT BOX ADAPTERS	HD-46601	1

Table 1. DTC B1214, B1215, B1216 Diagnostic Faults

POSSIBLE CAUSES
Short to battery in indicator ID circuit
Open in indicator ID circuit
Short to ground in indicator ID circuit
Indicator malfunction
IM malfunction

1. Short to Ground Test

1. Connect BREAKOUT BOX (Part Number:HD-42682) and BREAKOUT BOX ADAPTERS (Part Number:HD-46601) to wiring harness [39B], leaving [39A] disconnected. See Initial Diagnostics → DIAGNOSTIC TOOLS.
2. Using TEST CONNECTOR KIT (Part Number:HD-41404), test continuity between BOB terminal 11 and ground.
3. Is continuity present?

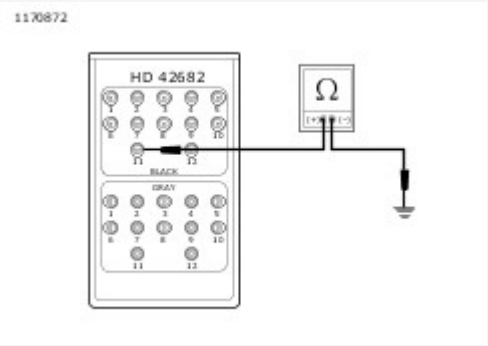

View interactive image

Figure 1.

a. **Yes.** Repair short to ground in (W/GY) wire.
b. **No.** Go to Test 2.

2. Short to Voltage Test

1. Turn IGN ON.
2. Test voltage between BOB terminal 11 and ground.
3. Is battery voltage present?

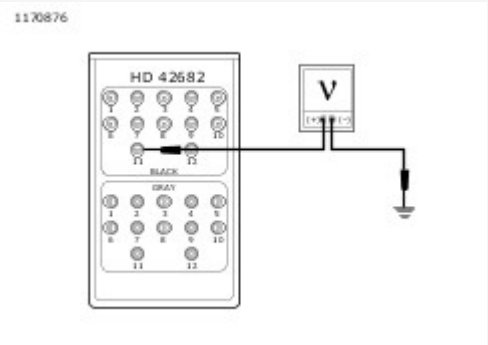

View interactive image

Figure 2.

a. **Yes.** Repair short to voltage in (W/GY) wire.
b. **No.** Go to Test 3.

3. Open Circuit Test

1. Test voltage between BOB terminal 11 and ground.
2. See Figure 2. Is voltage present?
   a. **Yes.** Go to Test 4.
   b. **No.** Repair open in (W/GY) wire.

4. Indicator Test

1. Replace indicator harness.
2. Clear DTC.
3. Did DTC return?
   a. **Yes.** Replace IM.
   b. **No.** Repair complete.

Special Tools

Description	Part Number	Qty.
TEST CONNECTOR KIT	HD-41404	1
OIL PRESSURE TEST GAUGE KIT	HD-96921-52D	1

Table 1. Oil Pressure Lamp Always On Diagnostic Faults

POSSIBLE CAUSES
Short to ground in oil pressure circuit
Indicator malfunction
Mechanical issue
Oil pressure switch malfunction

1. Engine Running Test

1. Start engine.
2. Does oil pressure lamp turn OFF and stay off?
    a. **Yes.** Oil pressure lamp is operating properly. Test for intermittent. See Initial Diagnostics → DIAGNOSTICS AND TROUBLESHOOTING → Wiggle Test.
    b. **No.** Go to Test 2.

2. Oil Pressure Switch Test

1. Disconnect oil pressure switch [120].
2. Does oil pressure lamp turn OFF when the engine is running?
    a. **Yes.** Go to Test 4.
    b. **No.** Go to Test 3.

3. Oil Pressure Circuit Test

1. Disconnect [78-3].
2. Using TEST CONNECTOR KIT (Part Number:HD-41404), test continuity between [120B] terminal 3 and ground.
3. Is continuity present?

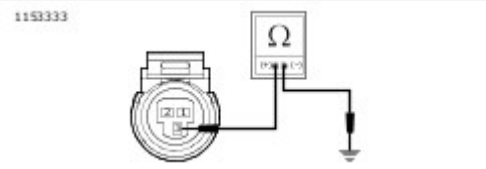

View interactive image

Figure 1.

a. **Yes.** Repair short to ground in (W/O) wire.
b. **No.** Replace indicator harness.

4. Mechanical Test

1. Inspect engine for any issues that impact oil pressure.
2. Using **OIL PRESSURE TEST GAUGE KIT (Part Number:HD-96921-52D)**, verify engine oil pressure.
3. Is oil pressure within specification?
   a. **Yes.** Replace oil pressure switch.
   b. **No.** Repair as needed.

Special Tools

Description	Part Number	Qty.
TEST CONNECTOR KIT	HD-41404	1

Table 1. DTC P0523 Diagnostic Faults

POSSIBLE CAUSES
Open oil pressure circuit
Indicator malfunction
Open ground circuit
Short to voltage in oil pressure circuit

1. Oil Pressure Switch Test

1. Disconnect oil pressure switch [120].
2. Using **TEST CONNECTOR KIT (Part Number:HD-41404)**, test voltage between [120B] terminals 1 and 3.
3. Is voltage greater than 6V?

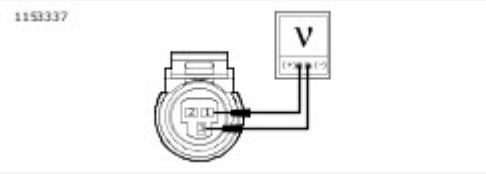

View interactive image

Figure 1.

a. **Yes.** Repair short to voltage in (W/O) wire.
b. **No. Less than 4V.** Go to Test 2.
c. **No. Between 4V and 6V.** Replace oil pressure switch.

2. Oil Pressure Circuit Test

1. Test voltage between [120B] terminal 3 and ground.
2. Is voltage less than 4V?

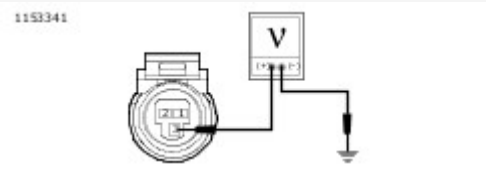

View interactive image

Figure 2.

a. **Yes.** Repair open in (W/O) wire.
b. **No.** Repair open in (BK/W) wire.

Table 1. Neutral Lamp Always On Diagnostic Faults

POSSIBLE CAUSES
Short to ground in neutral switch circuit
Short to ground in neutral indicator circuit

1. Neutral Lamp Function Test

1. Observe neutral lamp.
2. Does neutral lamp illuminate?
    a. **Yes.** Go to Test 2.
    b. **No.** See Instruments → INDICATOR LAMPS → Neutral Lamp Inoperative.

2. Indicator Harness Test

1. Disconnect IM [39].
2. Did neutral lamp turn OFF?
    a. **Yes.** Replace IM.
    b. **No.** Repair short to ground in (W) wire between neutral indicator and IM.

Special Tools

Description	Part Number	Qty.
TEST CONNECTOR KIT	HD-41404	1
BREAKOUT BOX	HD-42682	1
BREAKOUT BOX ADAPTERS	HD-46601	1
BREAKOUT BOX	HD-50390-1	1
BCM CABLE	HD-50390-2	1
BCM OVERLAY	HD-50390-2-P	1

Table 1. Neutral Lamp Inoperative Diagnostic Faults

POSSIBLE CAUSES
Neutral switch malfunction
Open ground circuit
Open neutral switch circuit
Indicator malfunction

1. Neutral Lamp Function Test

1. Verify vehicle is in neutral.
2. Does neutral lamp illuminate?
    a. **Yes.** Test for intermittent. See Initial Diagnostics → DIAGNOSTICS AND TROUBLESHOOTING → Wiggle Test.
    b. **No.** Go to Test 2.

2. BCM Message Test

1. Verify vehicle is in neutral.
2. With clutch lever released, start engine.
3. Does engine start?
    a. **Yes.** Go to Test 6.
    b. **No.** Go to Test 3.

3. Neutral Switch Test

1. Turn IGN OFF.
2. Disconnect neutral switch [131].
3. Using TEST CONNECTOR KIT (Part Number:HD-41404), jumper [131B-1] terminal 1 and [131B-2] terminal 1.
4. Does neutral lamp turn ON?

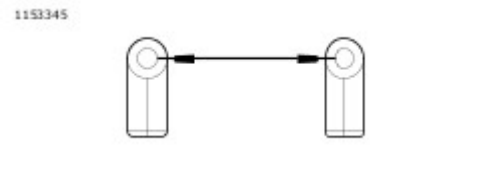

View interactive image

Figure 1.

a. **Yes.** Replace neutral switch.
b. **No.** Go to Test 4.

4. Ground Wire Test

1. Jumper between [131B-1] terminal 1 and ground.
2. Does neutral lamp turn on?

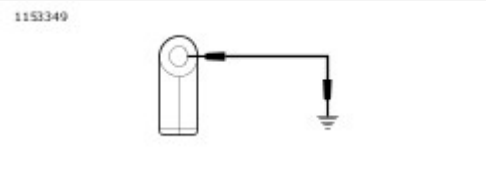

View interactive image

Figure 2.

a. **Yes.** Repair open in (BK) ground wire.
b. **No.** Go to Test 5.

5. Neutral Switch Power Circuit Open Test

1. Turn IGN OFF.
2. Disconnect BCM [242].
3. Connect the BREAKOUT BOX (Part Number:HD-50390-1) and BCM CABLE (Part Number:HD-50390-2) between wire harness [242B] and [242A]. See Initial Diagnostics → DIAGNOSTIC TOOLS.
4. Verify BCM OVERLAY (Part Number:HD-50390-2-P) is in position on BOB.
5. Test resistance between BOB terminal D3 and [131B-1] terminal 1 (W) wire.
6. Is resistance less than 0.5 ohm?

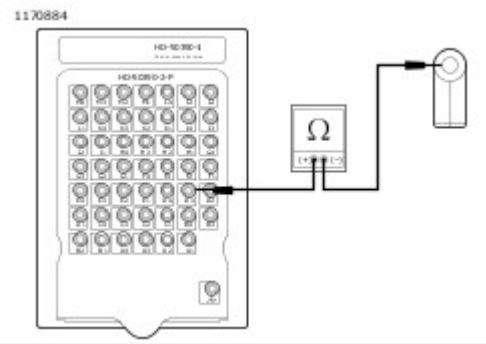

View interactive image

View interactive image

Figure 3.

a. **Yes.** Replace BCM.
b. **No.** Repair open in (W) wire between indicators and neutral switch.

6. IM Test

1. Turn IGN OFF.
2. Disconnect IM [39].
3. Connect **BREAKOUT BOX ADAPTERS (Part Number:HD-46601)** to [39]. Attach connectors from **BREAKOUT BOX (Part Number:HD-42682)** to harness adapters, leaving [39A] disconnected.
4. Turn IGN ON.
5. Jumper BOB terminal 6 to ground.
6. Does neutral lamp illuminate?

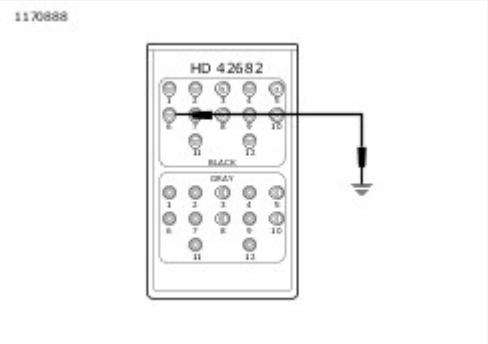

View interactive image

Figure 4.

a. **Yes.** Replace IM.
b. **No.** Replace indicator harness.

Special Tools

Description	Part Number	Qty.
BREAKOUT BOX	HD-42682	1
BREAKOUT BOX ADAPTERS	HD-46601	1

Table 1. High Beam Indicator Inoperative Diagnostic Faults

POSSIBLE CAUSES
Indicator malfunction
Open high beam indicator circuit

1. High Beam Indicator Function Test

1. Operate headlamp switch.
2. Do high and low beam headlamps function correctly?
    a. **Yes.** Go to Test 2.
    b. **No.** See Accessories, Horn, Lighting and Security → HEADLAMP DIAGNOSTICS.

2. High Beam Indicator Circuit Test

1. Turn IGN OFF.
2. Disconnect IM [39].
3. Turn IGN ON.
4. Connect BREAKOUT BOX ADAPTERS (Part Number:HD-46601) to [39]. Attach connectors from BREAKOUT BOX (Part Number:HD-42682) to harness adapters, leaving [39A] disconnected.
5. Jumper BOB terminal 4 to ground.
6. Does high beam indicator illuminate?

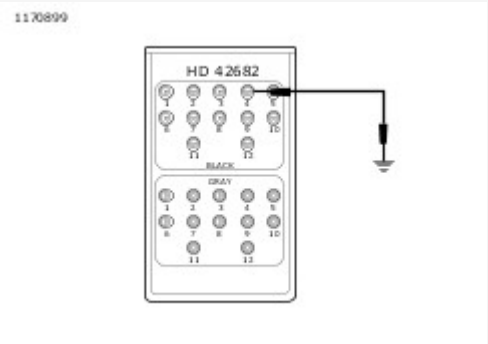

View interactive image

Figure 1.

    a. **Yes.** Replace IM.
    b. **No.** Replace indicator harness.

Special Tools

Description	Part Number	Qty.
BREAKOUT BOX	HD-42682	1
BREAKOUT BOX ADAPTERS	HD-46601	1

Table 1. High Beam Indicator Inoperative Diagnostic Faults

POSSIBLE CAUSES
Indicator malfunction
Open high beam indicator circuit

1. High Beam Indicator Function Test

1. Operate headlamp switch.
2. Do high and low beam headlamps function correctly?
    a. **Yes.** Go to Test 2.
    b. **No.** See Accessories, Horn, Lighting and Security → HEADLAMP DIAGNOSTICS.

2. High Beam Indicator Circuit Test

1. Turn IGN OFF.
2. Disconnect IM [39].
3. Turn IGN ON.
4. Connect BREAKOUT BOX ADAPTERS (Part Number:HD-46601) to [39]. Attach connectors from BREAKOUT BOX (Part Number:HD-42682) to harness adapters, leaving [39A] disconnected.
5. Jumper BOB terminal 4 to ground.
6. Does high beam indicator illuminate?

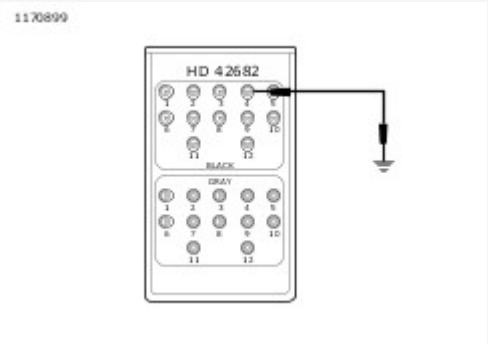

View interactive image

Figure 1.

    a. **Yes.** Replace IM.
    b. **No.** Replace indicator harness.

Table 1. Low Fuel Lamp Inoperative Diagnostic Faults

POSSIBLE CAUSES
Fuel level sensor malfunction
Fuel gauge malfunction

1. IM Test

NOTE

Test must be performed with fuel level in tank less than 3.79 L (1.0 USgal).

1. Turn IGN OFF.
2. Remove main fuse for 1 minute and install main fuse.
3. Turn IGN ON.
4. View fuel gauge.
5. Does the fuel gauge read low?
    a. **Yes.** Go to Test 2.
    b. **No.** Replace fuel level sensor.

2. Indicator Test

1. Perform a "WOW" test.
2. Did the fuel indicator illuminate?
    a. **Yes.** Calibrate IM to enable indicator.
    b. **No.** Replace IM.

Special Tools

Description	Part Number	Qty.
BREAKOUT BOX	HD-42682	1
BREAKOUT BOX ADAPTERS	HD-46601	1

Table 1. Turn Signal Indicator Inoperative Diagnostic Faults

POSSIBLE CAUSES
Indicator malfunction
Open turn signal circuit

1. Turn Signal Function Test

1. Operate turn signals.
2. Do turn signals operate?
    a. **Yes.** Go to Test 2.
    b. **No.** See Accessories, Horn, Lighting and Security → Turn Signals.

2. Turn Signal Indicator Circuit Test

1. Turn IGN OFF.
2. Disconnect IM [39].
3. Connect BREAKOUT BOX ADAPTERS (Part Number:HD-46601) to [39]. Attach connectors from BREAKOUT BOX (Part Number:HD-42682) to harness adapters, leaving [39A] disconnected.
4. Turn IGN ON.
5. Jumper BOB terminal 10 (left) or terminal 12 (right) to ground.
6. Does turn signal indicator illuminate?

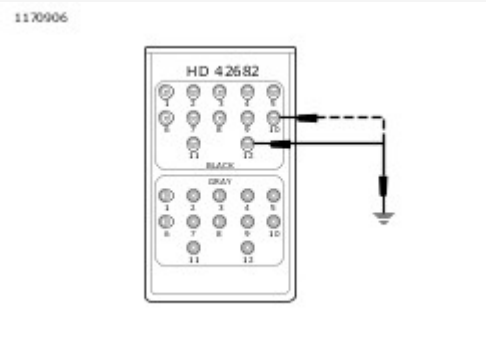

View interactive image

Figure 1.

    a. **Yes.** Replace IM.
    b. **No.** Replace indicator harness.

Table 1. Turn Signal Indicator Always On Diagnostic Faults

POSSIBLE CAUSES
Indicator malfunction
Short to ground turn signal circuit

1. Turn Signal Function Test

1. Operate turn signals.
2. Do turn signals operate?
    a. **Yes.** Go to Test 2.
    b. **No.** See Accessories, Horn, Lighting and Security → Turn Signals.

2. Turn Signal Indicator Circuit Test

1. Turn IGN OFF.
2. Disconnect IM [39].
3. Turn IGN ON.
4. Does turn signal indicator illuminate?
    a. **Yes.** Replace indicator harness.
    b. **No.** Replace IM.

The accessory circuit is powered from the BCM terminal M2 that powers the DLC, P&A, headlamp position lamp and the USB connectors. This circuit is energized by the BCM when the IGN is in the ACC or ON position.

Table 1. Code Description

DTC	DESCRIPTION
B2112	ACC output shorted high
B2113	ACC output shorted low
B2114	ACC output overloaded

Conditions for Setting

The accessory circuit normally has power when the IGN is ON or in the ACC positions. If the accessory circuit has power when the IGN is OFF, then DTC B2112 will set.

DTC B2114 will set if the accessory circuit draws more than 15 Amps.

The other accessory circuit DTCs will set if the BCM identifies them with the IGN ON or in the ACC position.

Diagnostic Tips

This circuit may be used for aftermarket accessories or systems. If a code is set and cannot be duplicated, verify that an aftermarket device did not cause the concern.

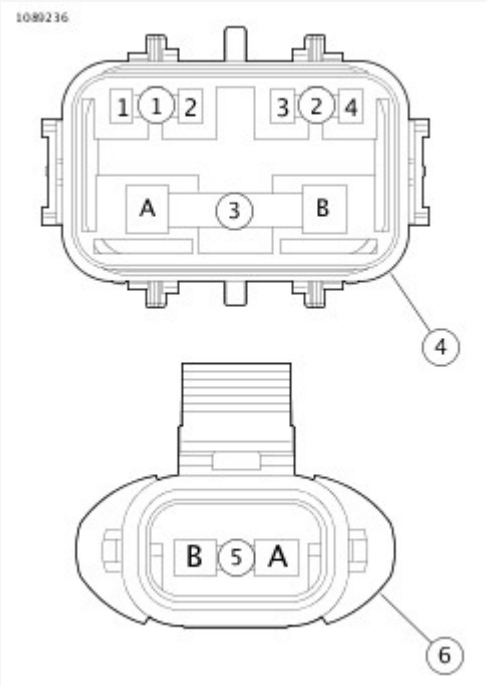

View interactive image

1	Battery
2	Battery tender

3	Main
4	Fuse block [64]
5	System power
6	Fuse block [332]

Figure 1. Fuse Blocks and Socket Terminals

Connector Information

For additional information about the connectors in the following diagram(s) and diagnostic procedure(s), see [Wiring → Wire Harness Connectors → General](#).

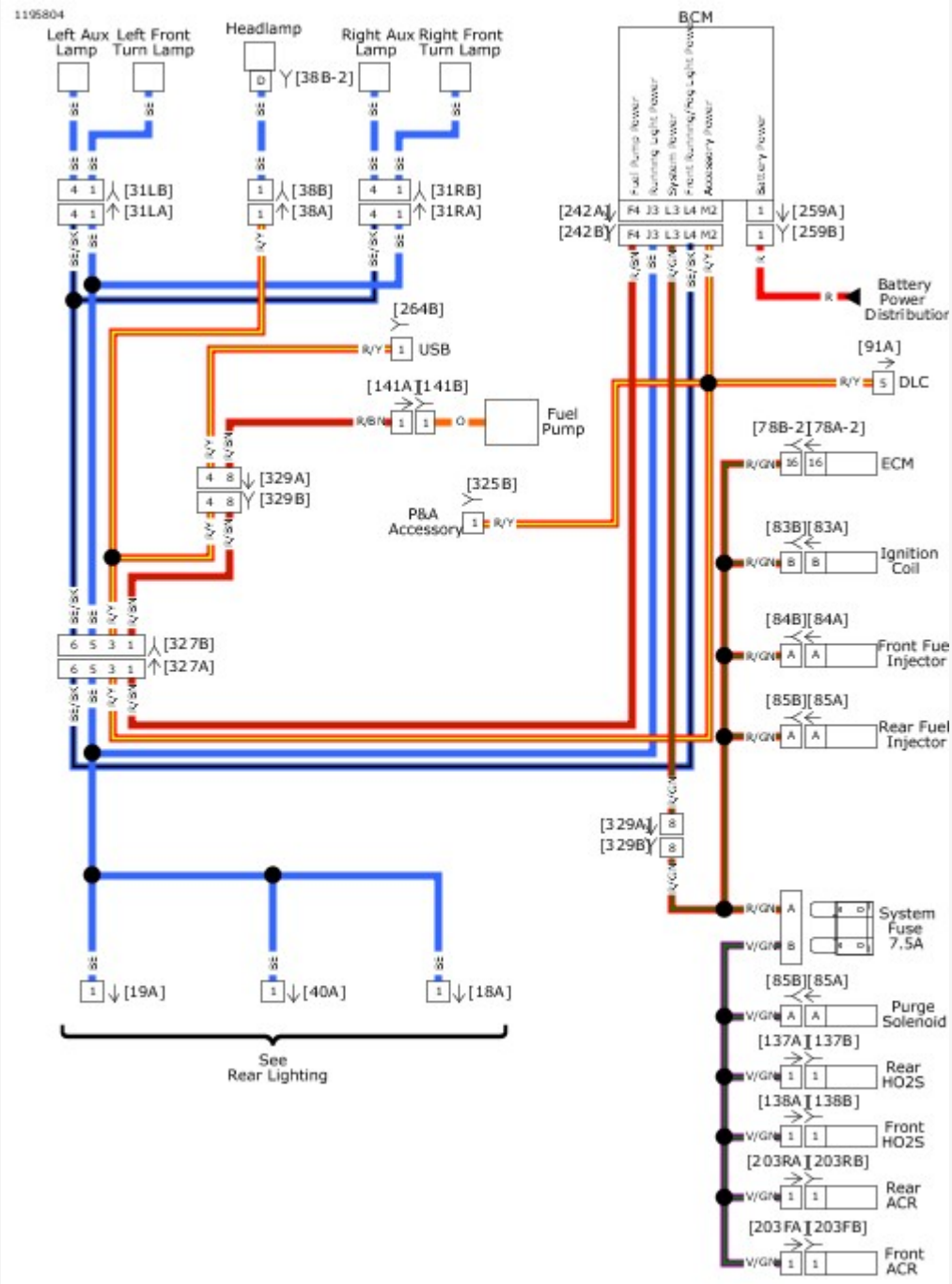

View interactive image

View interactive image

Figure 2. Power Distribution

Special Tools

Description	Part Number	Qty.
TEST CONNECTOR KIT	HD-41404	1

Table 1. DTC B2112 Diagnostic Faults

POSSIBLE CAUSES
Short to battery in the accessory power circuit

1. Accessory Power Circuit Short to Voltage Test

1. Turn IGN OFF.
2. Using **TEST CONNECTOR KIT (Part Number:HD-41404)**, test voltage between DLC [91A] terminal 5 and ground.
3. Is battery voltage present?

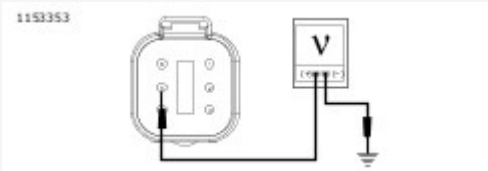

View interactive image

Figure 1.

   a. **Yes.** Repair short to voltage on (R/Y) wire.
   b. **No.** **Go to Test 2.**

2. BCM Test

1. Clear DTC.
2. Turn IGN ON, then OFF.
3. Check DTCs.
4. Did DTC reset?
   a. **Yes.** Replace BCM.
   b. **No.** Concern is intermittent. Accessory devices may have caused DTC to set. Inspect and repair as needed.

Special Tools

Description	Part Number	Qty.
TEST CONNECTOR KIT	HD-41404	1
BREAKOUT BOX	HD-50390-1	1
BCM CABLE	HD-50390-2	1
BCM OVERLAY	HD-50390-2-P	1

Table 1. DTC B2113, B2114 Diagnostic Faults

POSSIBLE CAUSES
Excessive current draw in accessory power circuit
Short to ground in the accessory power circuit

1. Accessory Power Circuit Short to Ground Test

1. Turn IGN OFF.
2. Connect **BREAKOUT BOX (Part Number:HD-50390-1)** and **BCM CABLE (Part Number:HD-50390-2)** to wire harness [242B] leaving [242A] disconnected. See **Initial Diagnostics → DIAGNOSTIC TOOLS**.
3. Verify **BCM OVERLAY (Part Number:HD-50390-2-P)** is in position on BOB.
4. Using **TEST CONNECTOR KIT (Part Number:HD-41404)**, test continuity between BOB terminal M2 and ground.
5. Is continuity present?

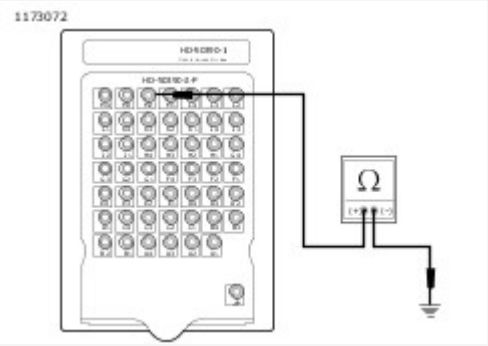

View interactive image

Figure 1.

a. **Yes.** **Go to Test 2.**
b. **No.** Concern is intermittent. See **Initial Diagnostics → DIAGNOSTICS AND TROUBLESHOOTING → Wiggle Test**.

2. Accessory Circuit Test

1. Inspect for any accessories connected to the accessory circuit.
2. Disconnect any accessories on the circuit.

3. Test continuity between BOB terminal M2 and ground.
4. See Figure 1. Is continuity present?
    a. **Yes.** Repair short to ground in (R/Y) wire.
    b. **No.** Go to Test 3.

3. BCM Test

1. Leave all aftermarket accessories disconnected.
2. Connect BCM [242A].
3. Clear DTC.
4. Turn IGN ON.
5. Did DTC reset?
    a. **Yes.** Replace BCM.
    b. **No.** Accessory devices may have caused DTC to set. Inspect and repair as needed.

The horn is powered by the BCM from terminal E4 and grounded through GND 2. When the horn switch is pressed, a CAN signal is sent to the BCM. The BCM then supplies power to the horn over the (R/V) wire.

The horn switch is a push button switch on the left handlebar controls. The LHCM sends a signal to the BCM over the CAN bus when the horn switch is pressed. The horn switch is diagnosed with the other switches in the hand controls. See **Accessories, Horn, Lighting and Security → SWITCH DIAGNOSTICS**.

NOTE

If the horn button is pressed for more than 10 seconds, the BCM deactivates the horn to protect it from damage. Checking horn output from the BCM has to be done within 10 seconds of pressing the horn button.

See **Figure 1**. The horn is located between the front frame tubes.

Table 1. Code Description

DTC	DESCRIPTION
B2127	E4 output shorted high
B2128	E4 output shorted low
B2129	E4 output overloaded

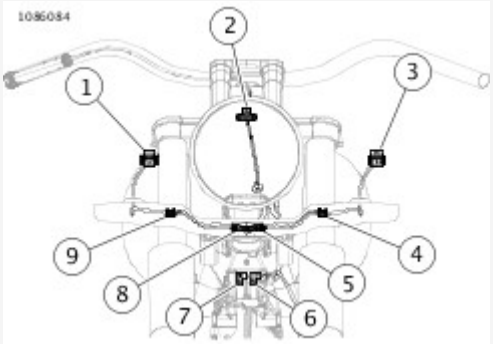

View interactive image

1	Right AUX/fog lamp [73R-2]
2	Headlamp [38-2]
3	Left AUX/fog lamp [73L-2]
4	Front left turn [31L-2]
5	Left AUX/fog lamp [73L]
6	Horn [122-1]
7	Horn [122-2]
8	Right AUX/fog lamp [73R]

9	Front right turn [31R-2]

Figure 1. Headlamp: FLSTC, FLSTN

Conditions for Setting

Press the horn switch to activate the horn in order to set these DTCs.

DTC B2129 will set if the horn circuit draws more than 5 Amps.

Diagnostic Tips

There will not be a code set if the horn switch is always open. If the horn will not function when the switch is pressed but the other switches on the LHCM work normally, see **Accessories, Horn, Lighting and Security → SWITCH DIAGNOSTICS**.

Connector Information

For additional information about the connectors in the following diagram(s) and diagnostic procedure(s), see **Wiring → Wire Harness Connectors → General**.

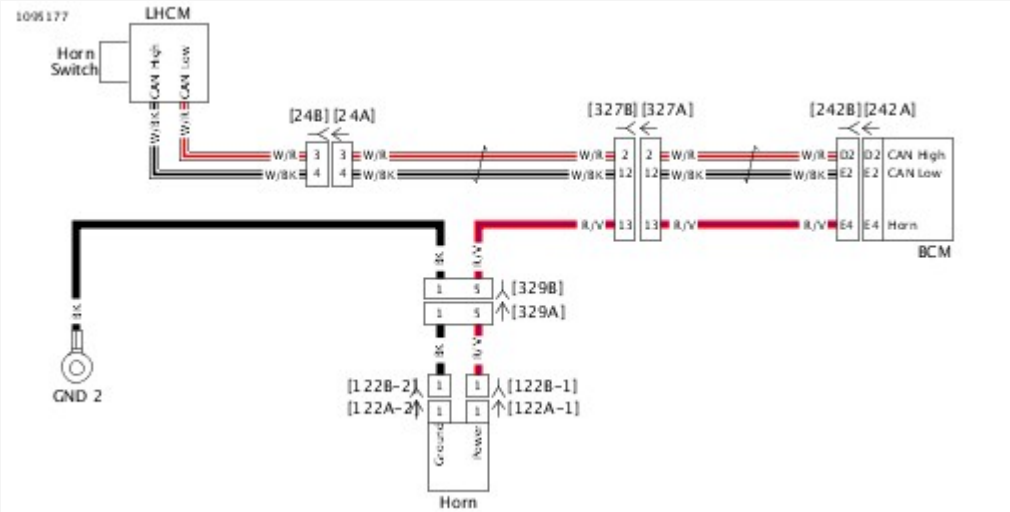

View interactive image

Figure 2. Horn

Special Tools

Description	Part Number	Qty.
TEST CONNECTOR KIT	HD-41404	1
BREAKOUT BOX	HD-50390-1	1
BCM CABLE	HD-50390-2	1
BCM OVERLAY	HD-50390-2-P	1
0.6 MM TERMINAL EXTACTOR TOOL	HD-50423	1

Table 1. DTC B2127 Diagnostic Faults

POSSIBLE CAUSES
Short to voltage in horn power circuit

1. Horn Power Circuit Short to Voltage Test

1. Turn IGN OFF.
2. Using **0.6 MM TERMINAL EXTACTOR TOOL (Part Number:HD-50423)**, remove terminal E4 (R/V) wire from BCM harness connector [242B].
3. Connect **BREAKOUT BOX (Part Number:HD-50390-1)** and **BCM CABLE (Part Number:HD-50390-2)** between wire harness [242B] and [242A]. See **Initial Diagnostics → DIAGNOSTIC TOOLS**.
4. Verify **BCM OVERLAY (Part Number:HD-50390-2-P)** is in position on BOB.
5. Turn IGN ON.
6. Using **TEST CONNECTOR KIT (Part Number:HD-41404)**, test voltage between extracted terminal E4 and ground.
7. Is voltage present?
    a. **Yes.** Repair short to voltage in horn power circuit (R/V) wire.
    b. **No.** **Go to Test 2.**

2. DTC Test

1. Clear DTCs.
2. Turn IGN ON.
3. Check DTCs.
4. Did DTC reset?
    a. **Yes.** Replace BCM.
    b. **No.** Concern is intermittent. See **Initial Diagnostics → DIAGNOSTICS AND TROUBLESHOOTING → Wiggle Test**.

Special Tools

Description	Part Number	Qty.
TEST CONNECTOR KIT	HD-41404	1

Table 1. DTC B2128, B2129 Diagnostic Faults

POSSIBLE CAUSES
Accessory horn overloading circuit
Short to ground in horn power circuit
Horn malfunction

1. Horn Circuit Test

1. Turn IGN OFF.
2. Disconnect horn [122].
3. Disconnect BCM [242].
4. Using **TEST CONNECTOR KIT (Part Number:HD-41404)**, test continuity between [122B-1] terminal 1 and ground.
5. Is continuity present?

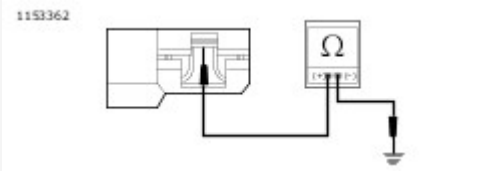

View interactive image

Figure 1.

   a. **Yes.** Repair short to ground in (R/V) wire.
   b. **No.** **Go to Test 2.**

2. DTC Test

1. Connect [242].
2. Clear DTC.
3. Turn IGN ON.
4. Press horn switch.
5. Check DTCs.
6. Did DTC reset?
   a. **Yes.** Replace horn.
   b. **No.** Concern is intermittent.

Special Tools

Description	Part Number	Qty.
TEST CONNECTOR KIT	HD-41404	1
BREAKOUT BOX	HD-50390-1	1
BCM CABLE	HD-50390-2	1
BCM OVERLAY	HD-50390-2-P	1

Table 1. Horn Inoperative Diagnostic Faults

POSSIBLE CAUSES
Open in horn ground circuit
Open in horn power circuit
Horn malfunction

1. Horn Test

1. Turn IGN OFF.
2. Disconnect horn [122].
3. Turn IGN ON.
4. Using **TEST CONNECTOR KIT (Part Number:HD-41404)**, test voltage between [122B-1] and [122B-2] while pressing horn switch.
5. Is battery voltage present?

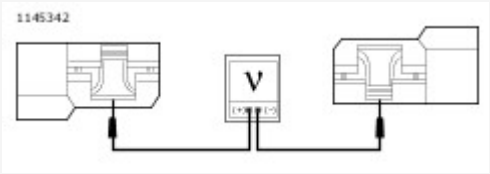

View interactive image

Figure 1.

a. **Yes.** Replace horn.
b. **No.** **Go to Test 2.**

2. Ground Circuit Open Test

1. While pressing horn switch, test voltage between [122B-1] terminal 1 and ground.

NOTE

If the horn button is pressed for more than 10 seconds, the BCM deactivates the horn to protect it from damage. Checking horn

output from the BCM has to be done within 10 seconds of pressing the horn button.

2. Is battery voltage present?

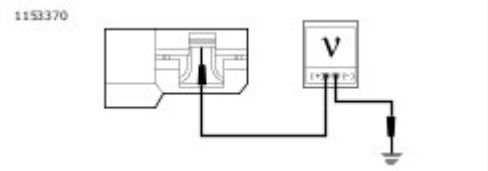

View interactive image

Figure 2.

a. **Yes.** Repair open in (BK) ground circuit.
b. **No.** Go to Test 3.

3. Power Circuit Open Test

1. Turn IGN OFF.
2. Connect BREAKOUT BOX (Part Number:HD-50390-1) and BCM CABLE (Part Number:HD-50390-2) between wire harness [242B] and [242A]. See Initial Diagnostics → DIAGNOSTIC TOOLS.
3. Verify BCM OVERLAY (Part Number:HD-50390-2-P) is in position on BOB.
4. While pressing horn switch, test voltage between BOB terminal E4 and ground.
5. Is battery voltage present?

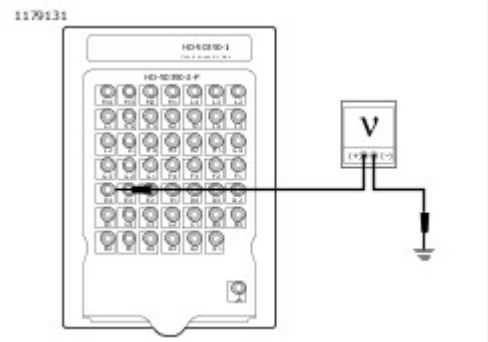

View interactive image

Figure 3.

a. **Yes.** Repair open in (R/V) wire.
b. **No.** Replace BCM.

The ECM controls and monitors the operation of the vehicle cruise control. The cruise switch allows the control circuit to be enabled or disabled and, when enabled, the lamp illuminates.

The CRUISE/SET/RESUME switch automatically regulates the speed of the vehicle. It is located on the LHCM and is a three position momentary switch, spring loaded to the center position.

- **CRUISE:** Press the CRUISE switch to enable cruise control. The cruise control indicator lights orange. Pressing the CRUISE switch again turns off cruise control.
- **SET/-:** With cruise control enabled, press SET/- to set cruise to current vehicle speed. The cruise control indicator lights green. While at cruising speed, press SET/- to reduce speed.
- **RESUME/+:** While at cruising speed, press RESUME/+ to increase speed. If cruise control is disengaged (such as a braking event), press RESUME/+ to resume the previous cruising speed.

Table 1. Code Description

DTC	DESCRIPTION
P0577	Cruise control input error

To engage and disengage the cruise control system, proceed as follows:

1. While riding in second gear and above, press straight in on the CRUISE/SET/RESUME switch to turn the cruise ON. The cruise enabled/engaged lamp in the instrument turns orange to indicate the system is activated.
2. With the motorcycle traveling at the desired cruise speed, 40.2–144.8 km/h (25–90 mph) and cruise control enabled, press SET/- to set the cruising speed.
3. The ECM monitors the VSS to establish the desired vehicle speed. The ECM then modulates the throttle control actuator to maintain vehicle speed. The cruise enabled/engaged lamp in the instrument turns from orange to green to indicate the cruising speed is locked in.
4. The ECM monitors both the engine rpm and the VSS output speed signal. The ECM signals the throttle control actuator to open or close the throttle to keep the speedometer output speed signal constant. The engine rpm is monitored to detect engine overspeed, a condition which automatically causes cruise disengagement.
5. The ECM automatically disengages cruise mode whenever the ECM receives one of the following inputs:
    a. Front or rear brake is applied.
    b. Throttle is "rolled forward" past closed, thereby actuating throttle roll off (disengage) command.
    c. Motorcycle clutch is disengaged or wheel slip detected. (ECM senses too great an increase in rpm).
    d. Pressing the CRUISE switch again turns off cruise control. The cruise enabled/engaged lamp in the instrument turns off to indicate the system is not activated.
    e. Handlebar-mounted engine stop switch placed in the off position.
    f. The SET/- switch is pressed and held in that position until vehicle speed drops below 40.2 km/h (25 mph) or press the RESUME/+ switch until vehicle speed exceeds 149.7 km/h (93 mph).

NOTE

If the vehicle speed is above 40.2 km/h (25 mph) when the cruise RESUME/+ switch is released, then the cruise system automatically re-engages.

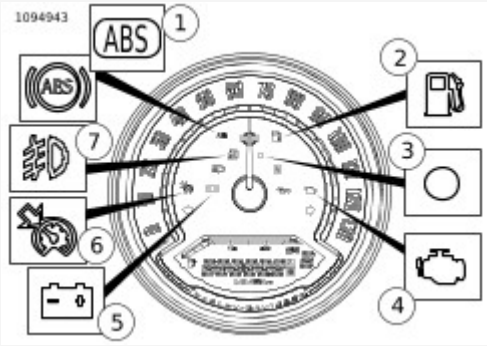

View interactive image

1	ABS (km/h ABS icon lamp also shown)
2	Low fuel
3	Security
4	Check engine
5	Battery
6	Cruise enabled
7	Aux lighting

Figure 1. Indicator Lamps (Console Mount)

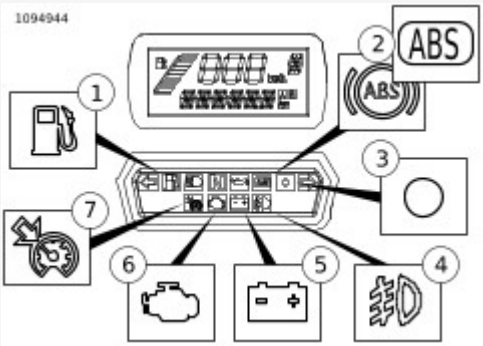

View interactive image

1	Low fuel
2	ABS (km/h ABS icon lamp also shown)
3	Security
4	Aux lighting
5	Battery
6	Check engine
7	Cruise enabled

Figure 2. Indicator Lamps (Handlebar Mount)

Cruise control switch interactive diagnostics are provided to allow testing of the cruise control inputs without the use of a service tool. Note that the diagnostic mode is only available if cruise control has been selected. The cruise engaged lamp is used to verify that each switch is activating properly.

Diagnostic Mode Entry

To enter diagnostic mode:

1. Turn IGN ON.
2. Press cruise enable to turn on the orange cruise enable lamp.
3. Turn IGN OFF.
4. Hold the cruise SET switch ON while switching IGN ON.

Switch Verification

In the diagnostic test mode, the green cruise engaged lamp is illuminated whenever any of these inputs are actuated:

- SET switch.
- RES switch.
- Front brake.
- Rear brake.
- Twist grip in "Cruise Rolloff" position.
- Clutch lever is pulled in.

NOTE

The cruise enable switch is automatically tested with the cruise power indicator light. No special test mode is needed.

Diagnostic Mode Exit

The diagnostic mode is exited for any of these conditions:

- Turn IGN OFF.
- The cruise enable switch is turned off.
- The engine is turning.

Diagnostic Tips

- An intermittent may be caused by poor connection, rubbed through wire insulation or an inoperative wire inside the insulation.
- **Poor connection:** Inspect component and harness connectors for backed out terminals, improper mating, inoperative locks, improperly formed or damaged terminals, poor terminal-to-wire connection and damaged harnesses.

The cruise control will become inoperative under the following conditions:

- Engine stop switch is off.
- Loss of ignition voltage.
- Throttle position faults P0120 and P0220.
- VSS faults P0501 and P0502.
- Cruise control switch or brake switch failure P0577.
- TPS correlation error P2135.
- Flash memory error P0605.
- Brake switch fault.
- ETC limited performance mode P1510.
- Cruise control set speed is too low.
- Cruise control set speed is too high.
- Vehicle cannot increase to cruise control set speed (uphill).
- Vehicle cannot decrease to cruise control set speed (downhill).
- Brake is applied.
- Twist grip roll-off.
- Engine has not been running long enough.
- Clutch lever is pulled in.
- Vehicle acceleration rate is too high.
- Vehicle deceleration rate is too high.
- Vehicle speed is too high.
- Vehicle speed is too low.
- Engine rpm is too high.
- Engine rpm is too low.
- Engine rpm acceleration is too high.
- Transmission is first gear or in neutral.

The cruise control system is monitored and controlled through the ECM. The CRUISE/SET/RESUME switch send signals from the LHCM to the ECM. If the ECM sees the same signal with no interruptions for more than two minutes, DTC P0577 will set.

Conditions for Setting

If the switch is held or stuck for over 2 minutes with the engine stop switch ON, the stuck switch code will set for that switch.

Diagnostic Tips

Pressing the switch for an extended period of time can set the stuck switch DTCs. These codes should be cleared and operate the vehicle to see if they return. Stuck switch codes will take over two minutes to set.

Table 1. DTC P0577 Diagnostic Faults

POSSIBLE CAUSES
LHCM malfunction

1. Switch Test

1. Clear DTC.
2. Turn engine stop switch ON, wait three minutes.
3. Operate vehicle to meet conditions for setting DTC.
4. Check DTCs.
5. Did DTC reset?
    a. **Yes.** Replace LHCM.
    b. **No.** Concern is intermittent. Switch may have been pressed for an extended period of time.

The BCM controls the turn signal functions, including the hazard lamps and turn signal cancellation feature. The BCM has separate controls for each of the turn signals. This allows the BCM to set DTCs for each turn signal individually.

See Figure 1. The BCM sends power to the turn signals directly over the specific wire for each signal. The BCM has different turn signal DTCs depending on vehicle configuration.

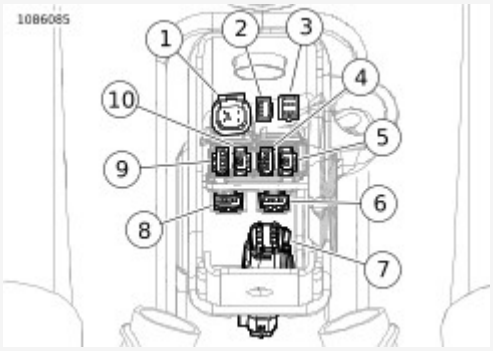

View interactive image

1	Headlamp [38]
2	Console [20]
3	TGS [204]
4	Right front lighting [31R]
5	Front WSS [167]
6	Left front lighting [31L]
7	USB caddy interconnect [329]
8	LHCM [24]
9	RHCM [22-1]
10	RHCM [22-2]

Figure 1. USB Caddy

The LHCM and RHCM send messages to the BCM over the CAN bus when either of the turn signal switches or hazard warning switch are pressed. The BCM will also set codes if it determines a switch is stuck in the pressed position for longer than two minutes. The switch DTCs are diagnosed with the other hand control module switches. See Accessories, Horn, Lighting and Security → SWITCH DIAGNOSTICS.

Manual Cancellation

To stop the turn signals from flashing, briefly press the turn signal switch a second time.

If signaling to turn in one direction, pressing the switch for the opposite turn signal will cause the first signal to cancel and the opposite side to begin.

Automatic Cancellation

Press the left or right turn switch to activate automatic turn signal cancellation. There is no need to hold the turn switch in when approaching the turn. The BCM will not cancel the signal before the turn is actually completed.

- When the turn signal switch is released, the system starts a 20 count. As long as the vehicle is traveling above 13 km/h (8 mph), the directional will always cancel after 20 flashes if the system does not recognize any other input.
- If the vehicle speed drops to 13 km/h (8 mph) or less, including stopped, the directionals will continue to flash. Counting will resume when vehicle speed reaches 13 km/h (8 mph) and will automatically cancel when the count total equals 20 as stated above.
- The turn signals may cancel within two seconds upon turn completion depending on vehicle lean angle during turn. The BCM monitors an internal accelerometer and cancels the signal after the vehicle has been returned to an upright position.

NOTE

The bank angle cancellation function has an automatic calibration feature. Ride the vehicle for 0.4 km (0.25 mi) at steady speeds (upright) to calibrate the system. This calibration process optimizes the performance of the bank angle function. This automatic calibration is performed every time the vehicle is started.

Four-Way Flashing

Use the following method to activate the four-way flashers:

1. With the ignition switch ON or in ACC, press the hazard warning switch.

NOTE

To activate or deactivate hazards on vehicle equipped with security system, the fob must be within range of the vehicle.

2. Turn the ignition switch OFF (the security system will arm if equipped). The four-way flashers will continue for two hours.
3. To cancel four-way flashing, disarm the security system if equipped, turn the ignition switch ON or to ACC and press the hazard warning switch.

NOTE

To activate or deactivate hazards on vehicle equipped with security system, the fob must be within range of the vehicle.

This system allows a stranded vehicle to be left in the four-way flashing mode and secured until help is found.

If the security system is disarmed while the four-way flashers are active, the lights will flash as follows:

1. BCM stops four-way flashing mode. Vehicle sits for one second with turn signals off.
2. BCM performs disarming confirmation (one flash).
3. Vehicle sits for one second with turn signals off.
4. Vehicle restarts four-way flashing mode.

Tip Over Detection Operation

The BCM uses an internal accelerometer to monitor vehicle position. Under normal driving conditions, the BCM uses the accelerometer along with speed input provided from the ECM to know when to automatically cancel the turn signals after a turn. The BCM will disable accessory power and starter activation and will shut down the ignition and the fuel pump if the vehicle is tipped over. The odometer will display "TIP" and the hazard lamps will activate when a tip-over condition is present. The hazard lamps will activate with or without the IGN ON.

Tip Over Reset

1. Turn IGN OFF.
2. Return the vehicle to an upright position.
3. Turn IGN ON.
4. Turn hazard lamps OFF.
5. Start engine.

Table 1. Will Not Cancel Upon Turn Completion, No DTCs Diagnostic Faults

POSSIBLE CAUSES
Conditions to self-cancel not met
Improper configuration

1. BCM Mounting Test

1. Verify BCM is securely mounted in proper position.
2. Is BCM mounted correctly?
    a. **Yes.** Go to Test 2.
    b. **No.** Mount correctly.

2. Correct Configuration Test

1. Check if BCM is configured correctly. See Accessories, Horn, Lighting and Security → SERVICE AND EMERGENCY FUNCTIONS AND CONFIGURATIONS.
2. Is BCM configured correctly?
    a. **Yes.** Go to Test 3.
    b. **No.** Select proper vehicle configuration.

3. Turn Signals Cancel Test

1. Operate vehicle at a speed greater than 13 km/h (8 mph) in a straight line.
2. Activate either turn signal.
3. Turn signals should cancel after 20 flashes.
4. Do turn signals cancel?
    a. **Yes.** System operating properly.
    b. **No.** Go to Test 4.

4. Speedometer Test

1. Does speedometer register vehicle speed?
    a. **Yes.** Replace BCM.
    b. **No.** See Initial Diagnostics → Initial Diagnostics.

See **Figure 1**. The turn signals are controlled by the BCM. The BCM supplies power to the turn signals and controls the flash rate of the turn signals through the turn signals individual power circuit.

When the turn signal or hazard warning lamp switch is pressed, the hand control module sends a message over the CAN bus to the BCM. The BCM then controls the power to the turn signal. The turn signals have a constant ground.

Before troubleshooting errors after relocating front turn signals, perform following steps:

1. Turn IGN ON.
2. Activate hazard lights for ten flashes.
3. Deactivate hazards.
4. Activate hazard lights for ten flashes.
5. Deactivate hazards.
6. Clear DTCs.
7. Turn IGN OFF, ON, activate hazard lights.
8. Verify DTCs.

NOTE

This is necessary for the BCM to validate the proper front lighting configuration and which module is actually controlling them.

Table 1. Code Description

DTC	DESCRIPTION
B2141	Left front turn signal output open
B2143	Left front turn signal output shorted low
B2144	Left front turn signal output overloaded
B2146	Right front turn signal output open
B2148	Right front turn signal output shorted low
B2149	Right front turn signal output overloaded

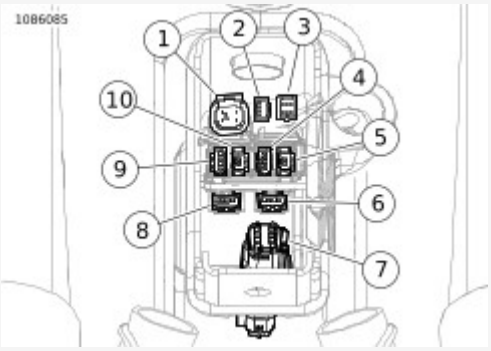

View interactive image

1	Headlamp [38]
2	Console [20]

3	TGS [204]
4	Right front lighting [31R]
5	Front WSS [167]
6	Left front lighting [31L]
7	USB caddy interconnect [329]
8	LHCM [24]
9	RHCM [22-1]
10	RHCM [22-2]

Figure 1. USB Caddy

Conditions for Setting

After clearing DTCs, test inoperative turn signal. Verify DTC does not return.

- DTC B2141 or B2146 will set if the corresponding front turn signal circuit draws less than 120 milliamps.
- DTC B2144 or B2149 will set if the corresponding front turn signal circuit draws more than 3 Amps.

Connector Information

For additional information about the connectors in the following diagram(s) and diagnostic procedure(s), see **Wiring → Wire Harness Connectors → General**.

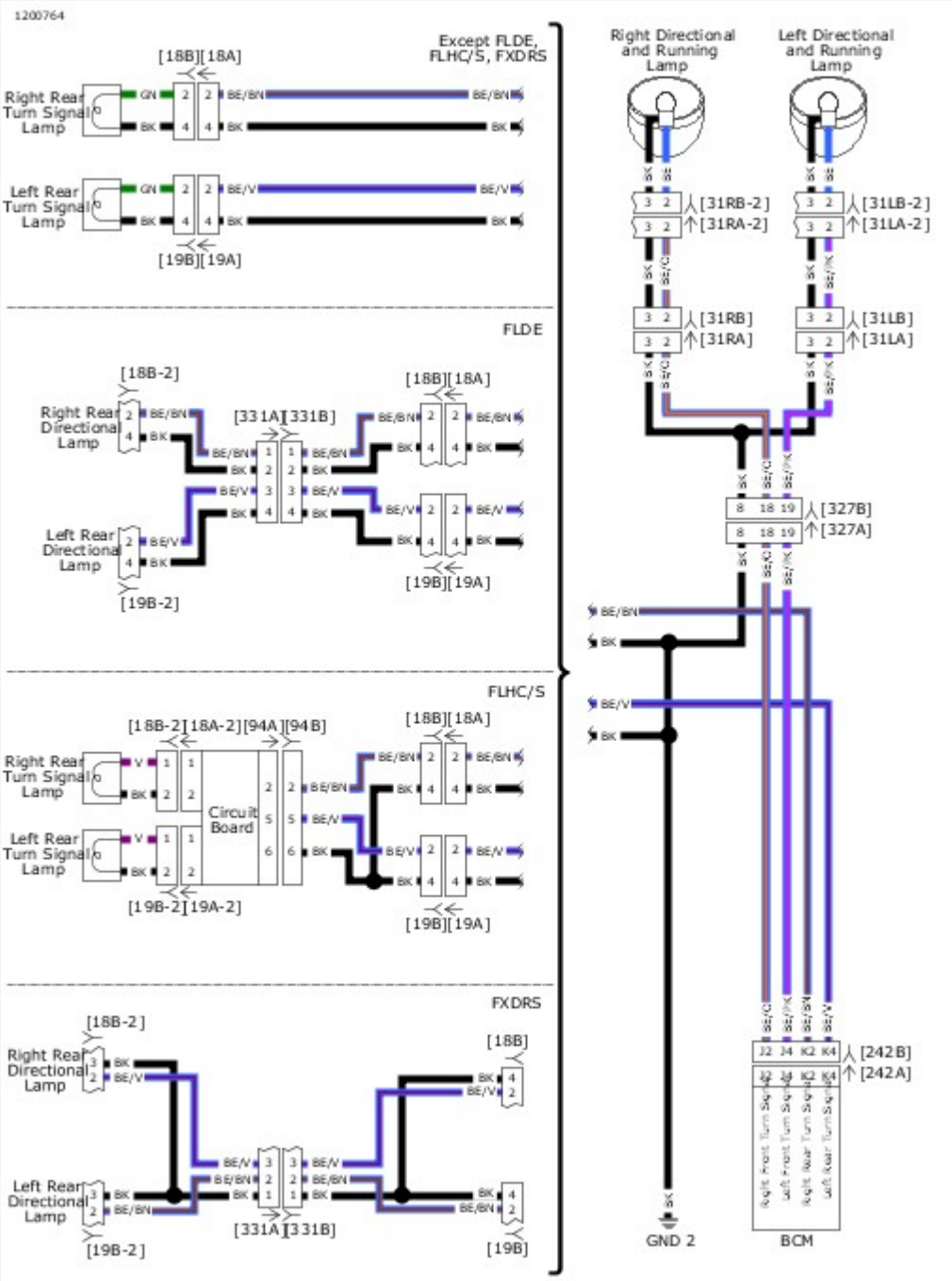

View interactive image

Figure 2. Turn Signal Circuit

Special Tools

Description	Part Number	Qty.
TEST CONNECTOR KIT	HD-41404	1
BREAKOUT BOX	HD-50390-1	1
BCM CABLE	HD-50390-2	1
BCM OVERLAY	HD-50390-2-P	1

Table 1. DTC B2141 Diagnostic Faults

POSSIBLE CAUSES
Open in left front turn signal ground circuit
Open in left front turn signal power circuit
Short to voltage in left front turn signal power circuit
Bulb malfunction

1. Left Front Turn Signal Test

1. Turn IGN OFF.
2. Inspect left front turn signal.
3. Is lamp good?
    a. **Yes.** Go to Test 2.
    b. **No. Lamp is LED.** Go to Test 3.
    c. **No. Bulb does not work.** Replace bulb.

2. Left Front Turn Signal Circuit Test

1. Disconnect left front turn signal [31LA-2].
2. Using TEST CONNECTOR KIT (Part Number:HD-41404), connect test light to [31LA-2] terminals 2 and 3.
3. Turn IGN ON.
4. Press left turn signal switch.
5. Does test light flash?

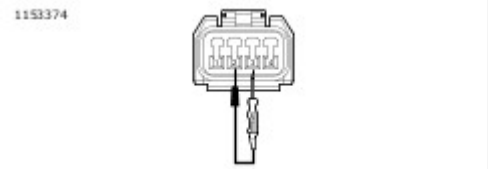

View interactive image

Figure 1.

a. **Yes.** Replace left front turn signal.
b. **No.** Go to Test 4.

3. Left Front Turn Signal Circuit Test

1. Disconnect left front turn signal [31RA-2].
2. Using TEST CONNECTOR KIT (Part Number:HD-41404), check for voltage [31LA-2] terminals 2 and 3.
3. Turn IGN ON.
4. Press left turn signal switch.
5. Does battery voltage turn on and off?

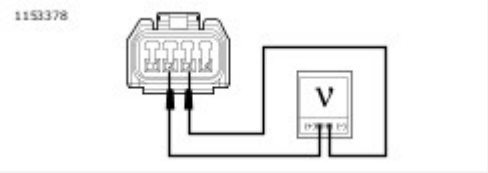

View interactive image

Figure 2.

a. **Yes.** Replace left front turn signal.
b. **No.** Go to Test 4.

4. Power Circuit Open Test

1. Turn IGN OFF.
2. Connect BREAKOUT BOX (Part Number:HD-50390-1) and BCM CABLE (Part Number:HD-50390-2) to wire harness [242B], leaving [242A] disconnected. See Initial Diagnostics → DIAGNOSTIC TOOLS.
3. Verify BCM OVERLAY (Part Number:HD-50390-2-P) is in position on BOB.
4. Using TEST CONNECTOR KIT (Part Number:HD-41404), test resistance between BOB terminal J4 and [31LA-2] terminal 2.
5. Is resistance less than 0.5 ohm?

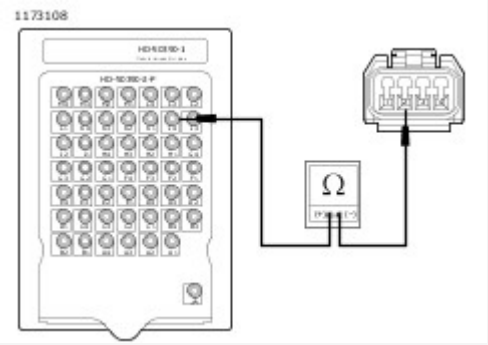

View interactive image

Figure 3.

a. **Yes.** Go to Test 5.
b. **No.** Repair open in (BE/PK) wire.

5. Ground Circuit Open Test

1. Using **TEST CONNECTOR KIT (Part Number:HD-41404)**, test resistance between [31LA-2] terminal 3 and ground.
2. Is resistance less than 0.5 ohms?

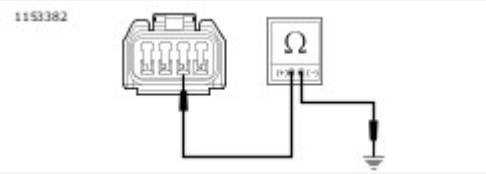

View interactive image

Figure 4.

a. **Yes.** **Go to Test 6.**
b. **No.** Repair open in (BK) wire.

6. Short To Voltage Test

1. Connect **BREAKOUT BOX (Part Number:HD-50390-1)** and **BCM CABLE (Part Number:HD-50390-2)** to wire harness [242B], leaving [242A] disconnected.
2. Verify **BCM OVERLAY (Part Number:HD-50390-2-P)** is in position on BOB.
3. Turn IGN ON.
4. Using **TEST CONNECTOR KIT (Part Number:HD-41404)**, test voltage between BOB terminal J4 and ground.
5. Is voltage present?

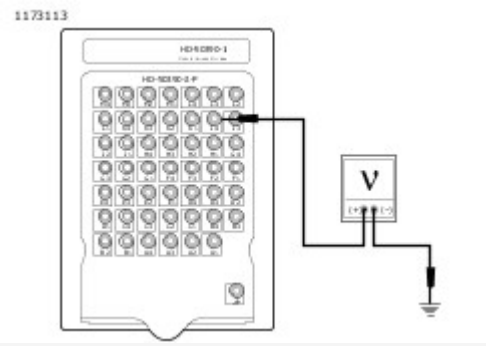

View interactive image

Figure 5.

a. **Yes.** Repair short to voltage in BE/PK) wire.
b. **No.** Replace BCM.

Special Tools

Description	Part Number	Qty.
TEST CONNECTOR KIT	HD-41404	1
BREAKOUT BOX	HD-50390-1	1
BCM CABLE	HD-50390-2	1
BCM OVERLAY	HD-50390-2-P	1

Table 1. DTC B2143, B2144 Diagnostic Faults

POSSIBLE CAUSES
Left front turn signal bulb current exceeds 3.0A
Accessory lighting overloading circuit
Short to ground in left front turn signal power circuit

1. Left Front Turn Signal Test

1. Turn IGN OFF.
2. Inspect left front turn signal.
3. Is the bulb good or is the vehicle equipped with LEDs?
   a. **Yes.** Go to Test 2.
   b. **No.** Replace bulb.

2. Power Circuit Short to Ground Test

1. Connect BREAKOUT BOX (Part Number:HD-50390-1) and BCM CABLE (Part Number:HD-50390-2) to wire harness [242B], leaving [242A] disconnected. See Initial Diagnostics → DIAGNOSTIC TOOLS.
2. Verify BCM OVERLAY (Part Number:HD-50390-2-P) is in position on BOB.
3. Using TEST CONNECTOR KIT (Part Number:HD-41404), with [31LB-2] disconnected, test continuity between BOB terminal J4 and ground.
4. Is continuity present?

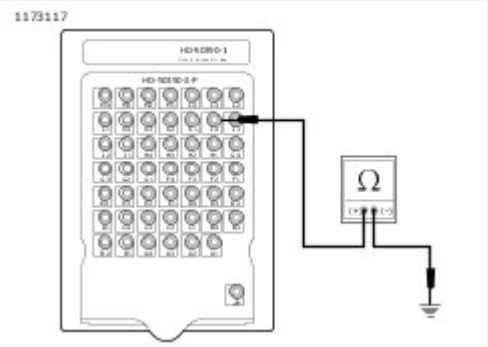

View interactive image

View interactive image

Figure 1.

a. **Yes.** Repair short to ground in left front turn signal power circuit (BE/PK).
b. **No.** Go to Test 3.

3. DTC Test

1. Connect [242].
2. Clear DTC.
3. Turn IGN ON.
4. Turn on left turn signal.
5. With [31LB-2] disconnected, check DTCs.
6. Did DTC B2143 or B2144 reset?
    a. **Yes.** Replace BCM.
    b. **No.** Replace turn signal assembly.

Special Tools

Description	Part Number	Qty.
TEST CONNECTOR KIT	HD-41404	1
BREAKOUT BOX	HD-50390-1	1
BCM CABLE	HD-50390-2	1
BCM OVERLAY	HD-50390-2-P	1

Table 1. DTC B2146 Diagnostic Faults

POSSIBLE CAUSES
Open in right front turn signal ground circuit
Open in right front turn signal power circuit
Short to voltage in right front turn signal power circuit
Bulb malfunction

1. Right Front Turn Signal Test

1. Turn IGN OFF.
2. Inspect right front turn signal.
3. Is lamp good?
    a. **Yes.** Go to Test 2.
    b. **No. Lamp is LED.** Go to Test 3.
    c. **No. Bulb does not work.** Replace bulb.

2. Right Front Turn Signal Circuit Test

1. Disconnect right front turn signal [31RA-2].
2. Using TEST CONNECTOR KIT (Part Number:HD-41404), connect test light to [31RA-2] terminals 2 and 3.
3. Turn IGN ON.
4. Press right turn signal switch.
5. Does test light flash?

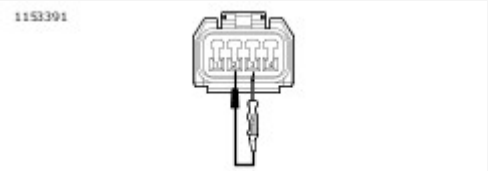

View interactive image

Figure 1.

a. **Yes.** Replace right front turn signal.
b. **No.** Go to Test 4.

3. Right Front Turn Signal Circuit Test

1. Disconnect right front turn signal [31RA-2].
2. Using TEST CONNECTOR KIT (Part Number:HD-41404), check for voltage [31RA-2] terminals 2 and 3.
3. Turn IGN ON.
4. Press right turn signal switch.
5. Does battery voltage turn on and off?

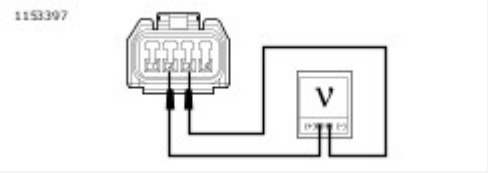

View interactive image

Figure 2.

a. **Yes.** Replace right front turn signal.
b. **No.** Go to Test 4.

4. Power Circuit Open Test

1. Turn IGN OFF.
2. Connect BREAKOUT BOX (Part Number:HD-50390-1) and BCM CABLE (Part Number:HD-50390-2) to wire harness [242B], leaving [242A] disconnected. See Initial Diagnostics → DIAGNOSTIC TOOLS.
3. Verify BCM OVERLAY (Part Number:HD-50390-2-P) is in position on BOB.
4. Using TEST CONNECTOR KIT (Part Number:HD-41404), test resistance between BOB terminal J2 and [31RA-2] terminal 2.
5. Is resistance less than 0.5 ohm?

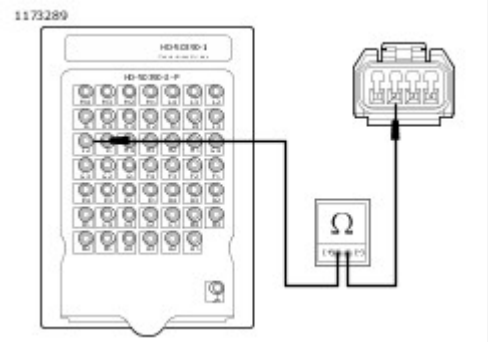

View interactive image

Figure 3.

a. **Yes.** Go to Test 5.
b. **No.** Repair open in (BE/O) wire.

5. Ground Circuit Open Test

1. Using **TEST CONNECTOR KIT (Part Number:HD-41404)**, test resistance between [31RA-2] terminal 3 and ground.
2. Is resistance less than 0.5 ohm?

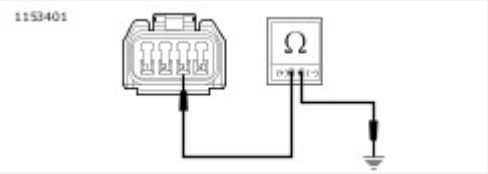

View interactive image

Figure 4.

   a. **Yes.** **Go to Test 6.**
   b. **No.** Repair open in (BK) wire.

6. Short To Voltage Test

1. Connect **BREAKOUT BOX (Part Number:HD-50390-1)** and **BCM CABLE (Part Number:HD-50390-2)** to wire harness [242B], leaving [242A] disconnected.
2. Verify **BCM OVERLAY (Part Number:HD-50390-2-P)** is in position on BOB.
3. Turn IGN ON.
4. Using **TEST CONNECTOR KIT (Part Number:HD-41404)**, test voltage between BOB terminal J2 and ground.
5. Is voltage present?

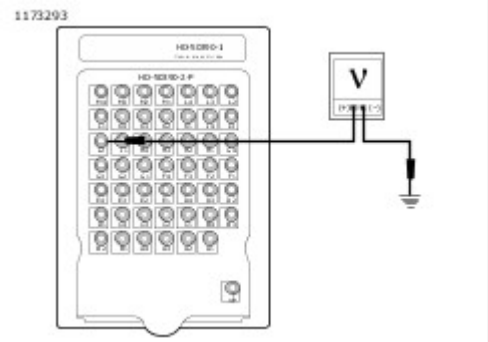

View interactive image

Figure 5.

   a. **Yes.** Repair short to voltage in BE/O) wire.
   b. **No.** Replace BCM.

Special Tools

Description	Part Number	Qty.
TEST CONNECTOR KIT	HD-41404	1
BREAKOUT BOX	HD-50390-1	1
BCM CABLE	HD-50390-2	1
BCM OVERLAY	HD-50390-2-P	1

Table 1. DTC B2148, B2149 Diagnostic Faults

POSSIBLE CAUSES
Right front turn signal bulb current exceeds 3.0A
Accessory lighting overloading circuit
Short to ground in right front turn signal power circuit

1. Right Front Turn Signal Test

1. Turn IGN OFF.
2. Inspect right front turn signal.
3. Is the bulb good or is the vehicle equipped with LEDs?
    a. **Yes.** Go to Test 2.
    b. **No.** Bulb does not work. Replace bulb.

2. Power Circuit Short to Ground Test

1. Connect BREAKOUT BOX (Part Number:HD-50390-1) and BCM CABLE (Part Number:HD-50390-2) to wire harness [242B], leaving [242A] disconnected. See Initial Diagnostics → DIAGNOSTIC TOOLS.
2. Verify BCM OVERLAY (Part Number:HD-50390-2-P) is in position on BOB.
3. Using TEST CONNECTOR KIT (Part Number:HD-41404), with [31RB-2] disconnected, test continuity between BOB terminal J2 and ground.
4. Is continuity present?

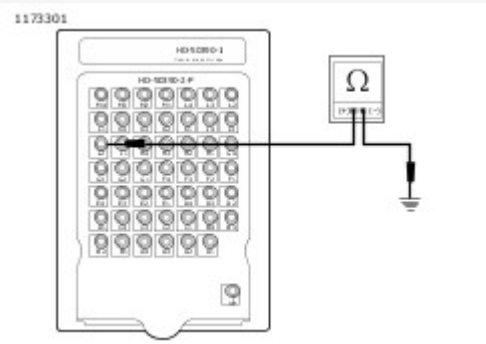

View interactive image

View interactive image

Figure 1.

a. **Yes.** Repair short to ground in right front turn signal power circuit (BE/O) wire.
b. **No.** Go to Test 3.

3. DTC Test

1. Connect [242].
2. Clear DTC.
3. Turn IGN ON.
4. Turn on right turn signal.
5. With [31RB-2] disconnected, check DTCs.
6. Did DTC B2148 or B2149 reset?
    a. **Yes.** Replace BCM.
    b. **No.** Replace turn signal assembly.

See Figure 1. The rear turn signals are controlled by the BCM. The BCM supplies power to the rear turn signals and controls the flash rate of the turn signals through the power circuit.

Table 1. Code Description

DTC	DESCRIPTION
B2151	Left rear turn signal output open
B2153	Left rear turn signal output shorted low
B2154	Left rear turn signal output overloaded
B2156	Right rear turn signal output open
B2158	Right rear turn signal output shorted low
B2159	Right rear turn signal output overloaded

Conditions for Setting

After clearing the DTCs, operate the inoperative turn signal to verify if the DTC has returned.

- DTC B2151 or B2156 will set if the corresponding rear turn signal circuit draws less than 120 milliamps.
- DTC B2154 or B2159 will set if the corresponding rear turn signal circuit draws more than 3 Amps.

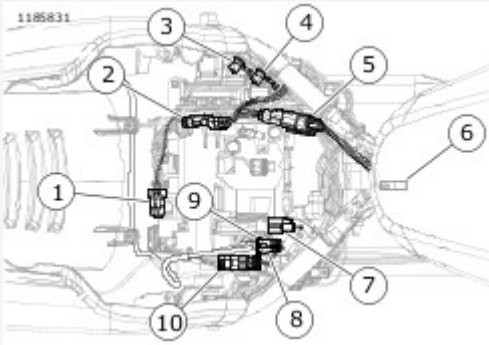

View interactive image

1	Purge solenoid [95]
2	Engine harness [145]
3	GND 1
4	GND 2
5	Backbone harness interconnect [327]
6	Engine harness interconnect [328]
7	Security antenna [209]
8	Left rear lighting [19]

9	Right rear lighting [18]
10	Tail lamp [40]

Figure 1. Under Seat

Connector Information

For additional information about the connectors in the following diagram(s) and diagnostic procedure(s), see **Wiring → Wire Harness Connectors → General**.

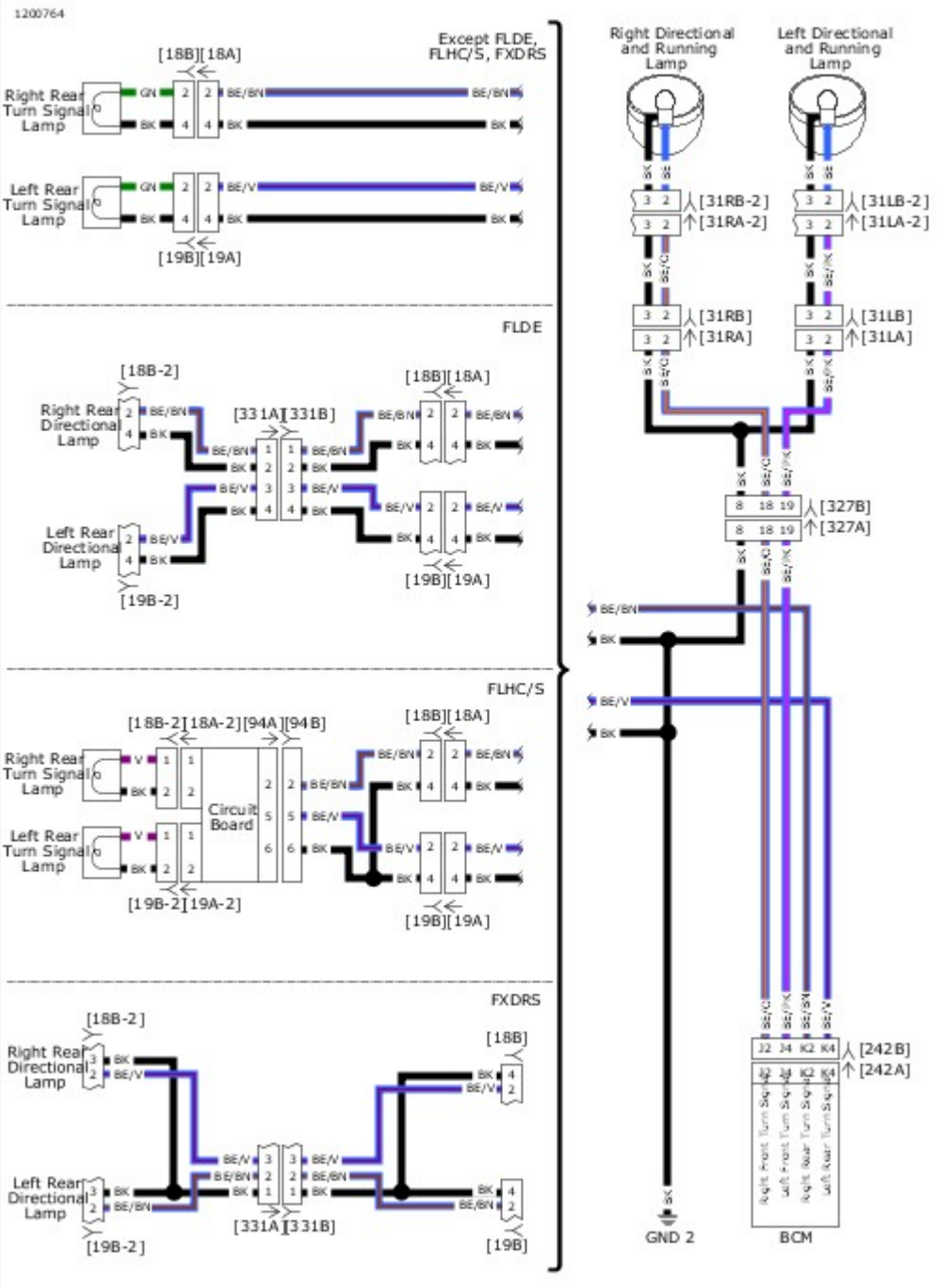

View interactive image

Figure 2. Turn Signal Circuit

Special Tools

Description	Part Number	Qty.
TEST CONNECTOR KIT	HD-41404	1
BREAKOUT BOX	HD-50390-1	1
BCM CABLE	HD-50390-2	1
BCM OVERLAY	HD-50390-2-P	1

Table 1. DTC B2151 Diagnostic Faults

POSSIBLE CAUSES
Open in left rear turn signal ground circuit
Open in left rear turn signal power circuit
Short to voltage in left rear turn signal power circuit
Bulb malfunction

1. Left Rear Turn Signal Test

1. With IGN ON, inspect left rear turn signal.
2. Is the turn signal always on?
    a. **Yes.** Go to Test 2.
    b. **No.** Go to Test 3.

2. Left Rear Turn Signal Short To Voltage Test

1. Disconnect left rear turn signal [19] at main harness.
2. Using TEST CONNECTOR KIT (Part Number:HD-41404), connect test light to [19A] terminals 2 and 4.
3. Turn IGN ON.
4. Does test light illuminate?

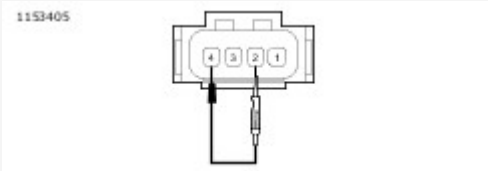

View interactive image

Figure 1.

    a. **Yes.** Repair short to voltage in (BE/V) wire.
    b. **No.** Repair short to voltage in rear lighting harness.

3. Left Rear Bulb Test

1. Turn IGN OFF.
2. Inspect left rear turn signal.
3. Is bulb good or LED?
    a. **Yes.** Go to Test 4.
    b. **No.** Replace bulb.

4. Left Rear Turn Signal Circuit Test

1. Disconnect left rear turn signal [19] at main harness.
2. Using TEST CONNECTOR KIT (Part Number:HD-41404), connect test light to [19A] terminals 2 and 4.
3. Turn IGN ON.
4. Press left turn signal switch.
5. See Figure 1. Does test light flash?
    a. **Yes. Except FLDE, FLHC/S.** Replace left rear turn signal.
    b. **Yes. FLDE.** Go to Test 7.
    c. **Yes. FLHC/S.** Go to Test 10.
    d. **No.** Go to Test 5.

5. Left Rear Turn Signal Ground Circuit Test

1. Connect test light to [19A] terminal 2 and ground.
2. Press left turn signal switch.
3. Does test light flash?

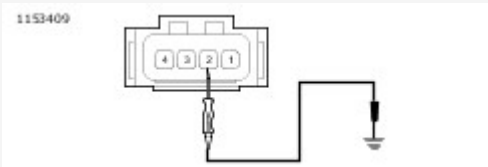

View interactive image

Figure 2.

    a. **Yes.** Repair open in (BK) wire.
    b. **No.** Go to Test 6.

6. Power Circuit Open Test

1. Turn IGN OFF.
2. Connect BREAKOUT BOX (Part Number:HD-50390-1) and BCM CABLE (Part Number:HD-50390-2) to wire harness [242B], leaving [242A] disconnected.
3. Verify BCM OVERLAY (Part Number:HD-50390-2-P) is in position on BOB.
4. Using TEST CONNECTOR KIT (Part Number:HD-41404), test resistance between BOB terminal K4 and [19A] terminal 2.
5. Is resistance less than 0.5 ohms?

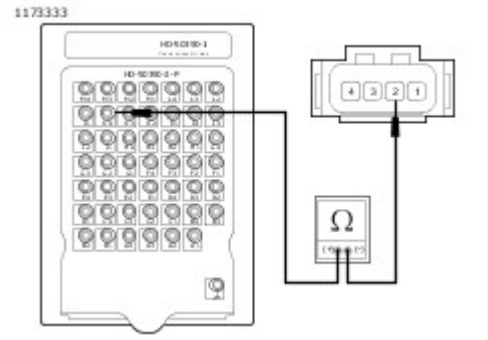

View interactive image

Figure 3.

a. **Yes.** Replace BCM.
b. **No.** Repair open in (BE/V) wire.

7. Turn Signal Test

1. Connect [19].
2. Disconnect left rear turn signal [19-2].
3. Using [TEST CONNECTOR KIT (Part Number:HD-41404)](), connect test light to [19B-2] terminals 2 and 4.
4. Turn IGN ON.
5. Press left turn signal switch.
6. Does test light flash?

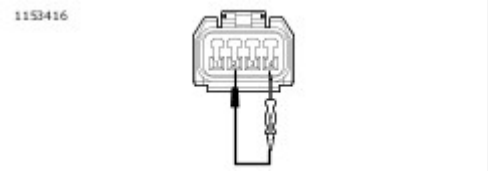

View interactive image

Figure 4.

a. **Yes.**Replace left rear turn signal.
b. **No.** [Go to Test 8.]()

8. Ground Circuit Open Test

1. Connect test light to [19B-2] terminals 2 and ground.
2. Press left turn signal switch.
3. Does test light flash?

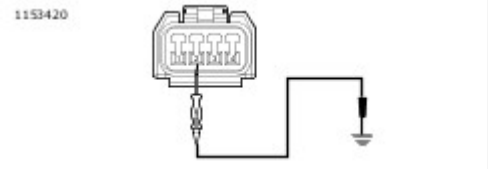

View interactive image

View interactive image

Figure 5.

a. **Yes.** Repair open in left rear turn signal ground circuit.
b. **No.** Go to Test 9.

9. Power Circuit Open Test

1. Turn IGN OFF.
2. Connect BREAKOUT BOX (Part Number:HD-50390-1) and BCM CABLE (Part Number:HD-50390-2) to wire harness [242B], leaving [242A] disconnected.
3. Verify BCM OVERLAY (Part Number:HD-50390-2-P) is in position on BOB.
4. Using TEST CONNECTOR KIT (Part Number:HD-41404), test resistance between BOB terminal K4 and [19B-2] terminal 2.
5. Is resistance less than 0.5 ohms?

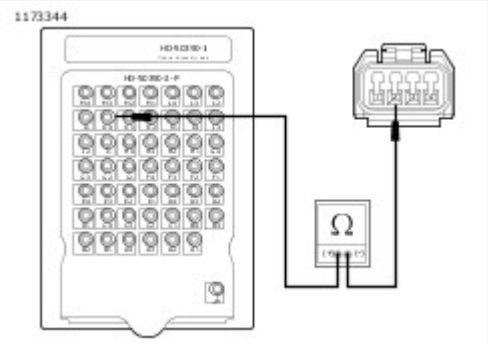

View interactive image

Figure 6.

a. **Yes.** Replace BCM.
b. **No.** Repair open in (BE/V) wire.

10. Left Rear Turn Signal Test

1. Connect [19].
2. Disconnect left rear turn signal [19-2].
3. Using TEST CONNECTOR KIT (Part Number:HD-41404), connect test light to [19A-2] terminals 1 and 2.
4. Turn IGN ON.
5. Press left turn signal switch.
6. Does test light flash?

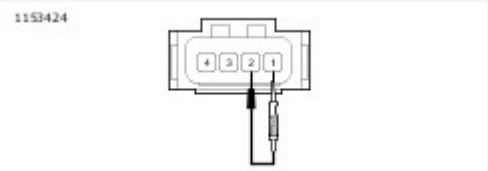

View interactive image

Figure 7.

a. **Yes.** Replace left rear turn signal.
b. **No.** Go to Test 11.

11. Turn Signal Ground Circuit Open Test

1. Connect test light to [19A-2] terminals 1 and ground.
2. Press left turn signal switch.
3. Does test light flash?

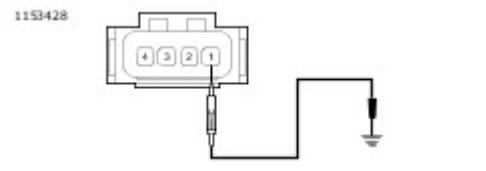

View interactive image

Figure 8.

a. **Yes.** Repair open in left rear turn signal ground circuit.
b. **No.** Go to Test 12.

12. Turn Signal Power Circuit Open Test

1. Turn IGN OFF.
2. Connect BREAKOUT BOX (Part Number:HD-50390-1) and BCM CABLE (Part Number:HD-50390-2) to wire harness [242B], leaving [242A] disconnected.
3. Verify BCM OVERLAY (Part Number:HD-50390-2-P) is in position on BOB.
4. Using TEST CONNECTOR KIT (Part Number:HD-41404), test resistance between BOB terminal K4 and [19A-2] terminal 1.
5. Is resistance less than 0.5 ohms?

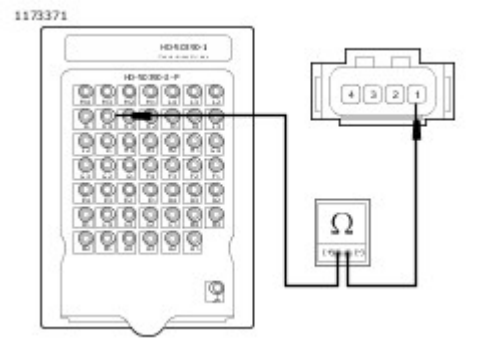

View interactive image

Figure 9.

a. **Yes.** Replace BCM.
b. **No.** Go to Test 13.

13. Circuit Board Test

1. Disconnect circuit board [94].
2. Test resistance between BOB terminal K4 and [94B] terminal 5.
3. Is resistance less than 0.5 ohms?

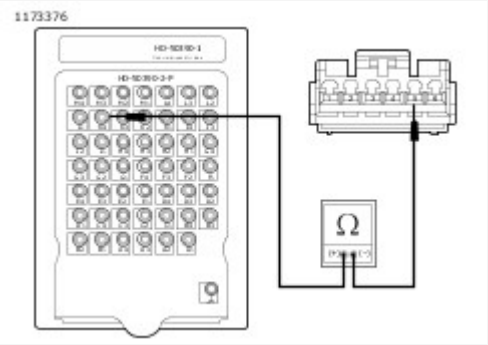

View interactive image

Figure 10.

a. **Yes.** Replace circuit board.
b. **No.** Repair open in (BE/V) wire.

Special Tools

Description	Part Number	Qty.
TEST CONNECTOR KIT	HD-41404	1
BREAKOUT BOX	HD-50390-1	1
BCM CABLE	HD-50390-2	1
BCM OVERLAY	HD-50390-2-P	1

Table 1. DTC B2153, B2154 Diagnostic Faults

POSSIBLE CAUSES
Left rear turn signal bulb current too high
Accessory lighting overloading circuit
Short to ground in left rear turn signal power circuit

1. DTC Test

1. Disconnect left rear turn signal [19] at main harness.
2. Check DTCs.
3. Did DTC change to historic code?
    a. **Yes. Except FLDE, FLHC/S.** Replace left rear turn signal.
    b. **Yes. FLDE.** Go to Test 3.
    c. **Yes. FLHC/S.** Go to Test 4.
    d. **No.** Go to Test 2.

2. Power Circuit Short to Ground Test

1. Turn IGN OFF.
2. Connect BREAKOUT BOX (Part Number:HD-50390-1) and BCM CABLE (Part Number:HD-50390-2) to wire harness [242B], leaving [242A] disconnected. See Initial Diagnostics → DIAGNOSTIC TOOLS.
3. Verify BCM OVERLAY (Part Number:HD-50390-2-P) is in position on BOB.
4. Using TEST CONNECTOR KIT (Part Number:HD-41404), test continuity between BOB terminal K4 and ground.
5. Is continuity present?

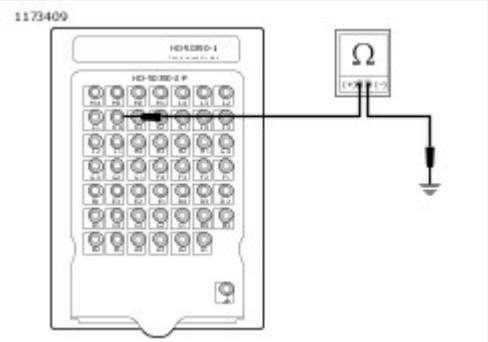

View interactive image

Figure 1.

a. **Yes.** Repair short to ground in (BE/V) wire.
b. **No.** Replace BCM.

3. Turn Signal Component Test

1. Disconnect left rear turn signal.
2. Using **TEST CONNECTOR KIT (Part Number:HD-41404)**, test continuity between [19B] terminal 2 and ground.
3. Is continuity present?

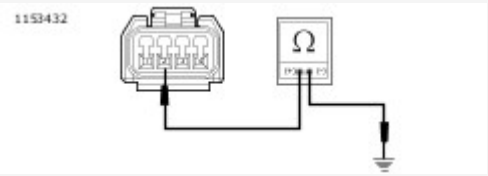

View interactive image

Figure 2.

a. **Yes.** Repair short to ground in left rear turn signal power circuit.
b. **No.** Replace left rear turn signal assembly.

4. Left Rear Turn Signal Component Test

1. Disconnect left rear turn signal.
2. Using **TEST CONNECTOR KIT (Part Number:HD-41404)**, test continuity between [19A] terminal 1 and ground.
3. Is continuity present?

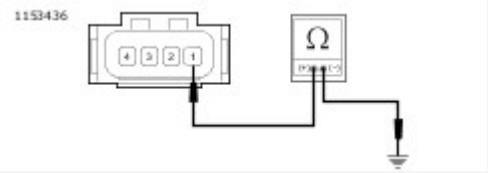

View interactive image

Figure 3.

a. **Yes.** Repair short to ground in left rear turn signal power circuit.
b. **No.** Replace left rear turn signal assembly.

Special Tools

Description	Part Number	Qty.
TEST CONNECTOR KIT	HD-41404	1
BREAKOUT BOX	HD-50390-1	1
BCM CABLE	HD-50390-2	1
BCM OVERLAY	HD-50390-2-P	1

Table 1. DTC B2156 Diagnostic Faults

POSSIBLE CAUSES
Open in right rear turn signal ground circuit
Open in right rear turn signal power circuit
Short to voltage in right rear turn signal power circuit
Bulb malfunction

1. Right Rear Turn Signal Test

1. With IGN ON, inspect right rear turn signal.
2. Is the turn signal always on?
    a. **Yes.** Go to Test 2.
    b. **No.** Go to Test 3.

2. Right Rear Turn Signal Short To Voltage Test

1. Disconnect right rear turn signal [18] at main harness.
2. Using TEST CONNECTOR KIT (Part Number:HD-41404), connect test light to [18A] terminals 2 and 4.
3. Turn IGN ON.
4. Does test light illuminate?

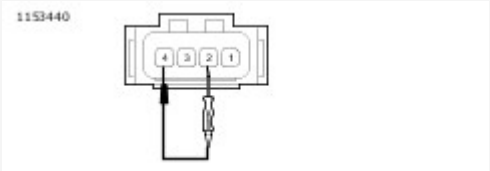

View interactive image

Figure 1.

    a. **Yes.** Repair short to voltage in (BE/BN) wire.
    b. **No.** Repair short to voltage in rear lighting harness.

3. Right Rear Bulb Test

1. Turn IGN OFF.
2. Inspect right rear turn signal.
3. Is the bulb good or is the vehicle equipped with LEDs?
    a. **Yes.** Go to Test 4.
    b. **No.** Replace bulb.

4. Right Rear Turn Signal Circuit Test

1. Disconnect right rear turn signal [18] at main harness.
2. Using TEST CONNECTOR KIT (Part Number:HD-41404), connect test light to [18A] terminals 2 and 4.
3. Turn IGN ON.
4. Press right turn signal switch.
5. See Figure 1. Does test light flash?
    a. **Yes. Except FLDE, FLHC/S.** Replace right rear turn signal.
    b. **Yes. FLDE.** Go to Test 7.
    c. **Yes. FLHC/S.** Go to Test 10.
    d. **No.** Go to Test 5.

5. Right Rear Turn Signal Ground Circuit Test

1. Connect test light to [18A] terminal 2 and ground.
2. Press right turn signal switch.
3. Does test light flash?

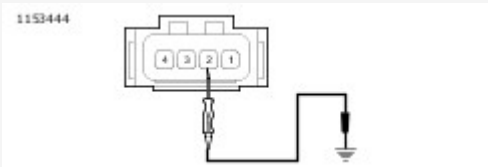

View interactive image

Figure 2.

    a. **Yes.** Repair open in (BK) wire.
    b. **No.** Go to Test 6.

6. Power Circuit Open Test

1. Turn IGN OFF.
2. Connect BREAKOUT BOX (Part Number:HD-50390-1) and BCM CABLE (Part Number:HD-50390-2) to wire harness [242B], leaving [242A] disconnected.
3. Verify BCM OVERLAY (Part Number:HD-50390-2-P) is in position on BOB.
4. Using TEST CONNECTOR KIT (Part Number:HD-41404), test resistance between BOB terminal K2 and [18A] terminal 2.
5. Is resistance less than 0.5 ohms?

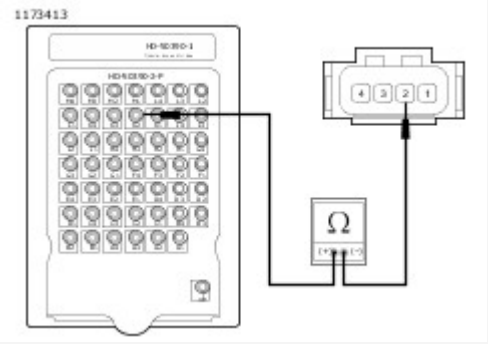

View interactive image

Figure 3.

a. **Yes.** Replace BCM.
b. **No.** Repair open in (BE/BN) wire.

7. Turn Signal Test

1. Connect [19].
2. Disconnect right rear turn signal [18-2].
3. Using **TEST CONNECTOR KIT (Part Number:HD-41404)**, connect test light to [18B-2] terminals 2 and 4.
4. Turn IGN ON.
5. Press right turn signal switch.
6. Does test light flash?

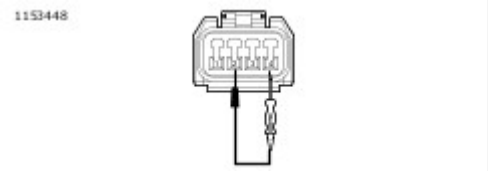

View interactive image

Figure 4.

a. **Yes.** Replace right rear turn signal.
b. **No.** **Go to Test 8.**

8. Ground Circuit Open Test

1. Connect test light to [18B-2] terminals 2 and ground.
2. Press right turn signal switch.
3. Does test light flash?

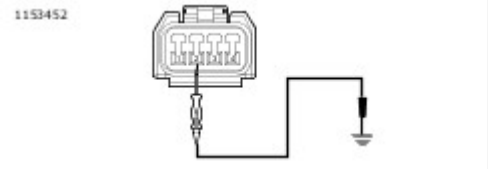

View interactive image

View interactive image

Figure 5.

a. **Yes.** Repair open in right rear turn signal ground circuit.
b. **No.** Go to Test 9.

9. Power Circuit Open Test

1. Turn IGN OFF.
2. Connect BREAKOUT BOX (Part Number:HD-50390-1) and BCM CABLE (Part Number:HD-50390-2) to wire harness [242B], leaving [242A] disconnected.
3. Verify BCM OVERLAY (Part Number:HD-50390-2-P) is in position on BOB.
4. Using TEST CONNECTOR KIT (Part Number:HD-41404), test resistance between BOB terminal K2 and [18B-2] terminal 2.
5. Is resistance less than 0.5 ohms?

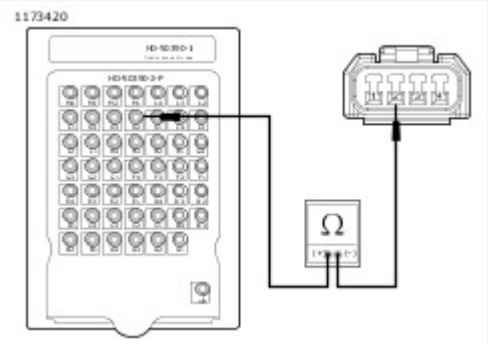

View interactive image

Figure 6.

a. **Yes.** Replace BCM.
b. **No.** Repair open in (BE/BN) wire.

10. Right Rear Turn Signal Test

1. Connect [18].
2. Disconnect right rear turn signal [18-2].
3. Using TEST CONNECTOR KIT (Part Number:HD-41404), connect test light to [18A-2] terminals 1 and 2
4. Turn IGN ON.
5. Press right turn signal switch.
6. Does test light flash?

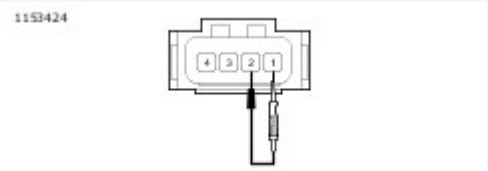

View interactive image

Figure 7.

a. **Yes.** Replace right rear turn signal.
b. **No.** Go to Test 11.

11. Turn Signal Ground Circuit Open Test

1. Connect test light to [18A-2] terminals 1 and ground.
2. Press right turn signal switch.
3. Does test light flash?

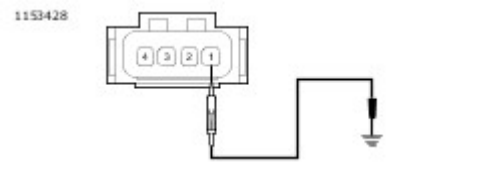

View interactive image

Figure 8.

a. **Yes.** Repair open in right rear turn signal ground circuit.
b. **No.** Go to Test 12.

12. Turn Signal Power Circuit Open Test

1. Turn IGN OFF.
2. Connect BREAKOUT BOX (Part Number:HD-50390-1) and BCM CABLE (Part Number:HD-50390-2) to wire harness [242B], leaving [242A] disconnected.
3. Verify BCM OVERLAY (Part Number:HD-50390-2-P) is in position on BOB.
4. Using TEST CONNECTOR KIT (Part Number:HD-41404), test resistance between BOB terminal K2 and [18A-2] terminal 1.
5. Is resistance less than 0.5 ohms?

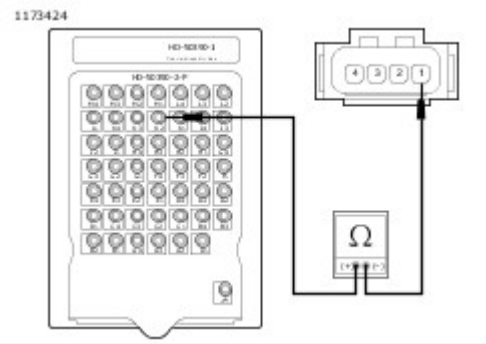

View interactive image

Figure 9.

a. **Yes.** Replace BCM.
b. **No.** Go to Test 13.

13. Circuit Board Test

1. Disconnect circuit board [94].
2. Test resistance between BOB terminal K2 and [94B] terminal 2.
3. Is resistance less than 0.5 ohms?

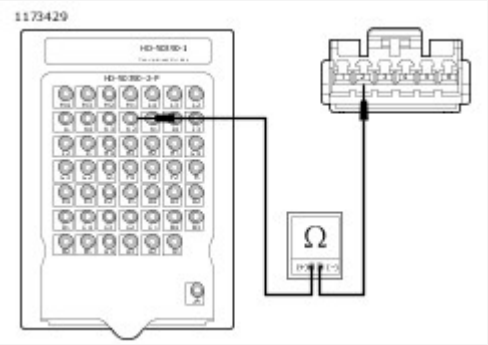

View interactive image

Figure 10.

a. **Yes.** Replace circuit board.
b. **No.** Repair open in (BE/BN) wire.

Special Tools

Description	Part Number	Qty.
TEST CONNECTOR KIT	HD-41404	1
BREAKOUT BOX	HD-50390-1	1
BCM CABLE	HD-50390-2	1
BCM OVERLAY	HD-50390-2-P	1

Table 1. DTC B2158, B2159 Diagnostic Faults

POSSIBLE CAUSES
Right rear turn signal bulb current too high
Accessory lighting overloading circuit
Short to ground in right rear turn signal power circuit

1. DTC Test

1. Disconnect right rear turn signal [18] at main harness.
2. Check DTCs.
3. Did DTC change to historic code?
    a. **Yes. Except FLDE, FLHC/S.** Replace right rear turn signal.
    b. **Yes. FLDE.** Go to Test 3.
    c. **Yes. FLHC/S.** Go to Test 4.
    d. **No.** Go to Test 2.

2. Power Circuit Short to Ground Test

1. Turn IGN OFF.
2. Connect BREAKOUT BOX (Part Number:HD-50390-1) and BCM CABLE (Part Number:HD-50390-2) to wire harness [242B], leaving [242A] disconnected. See Initial Diagnostics → DIAGNOSTIC TOOLS.
3. Verify BCM OVERLAY (Part Number:HD-50390-2-P) is in position on BOB.
4. Using TEST CONNECTOR KIT (Part Number:HD-41404), test continuity between BOB terminal K2 and ground.
5. Is continuity present?

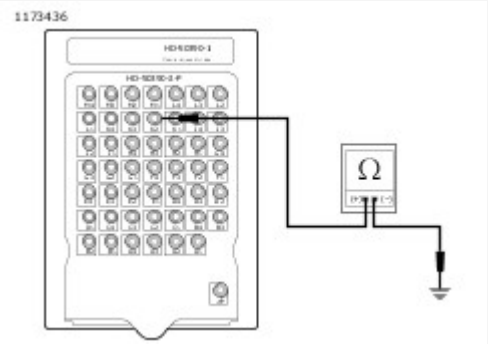

View interactive image

Figure 1.

a. **Yes.** Repair short to ground in (BE/BN) wire.
b. **No.** Replace BCM.

3. Turn Signal Component Test

1. Disconnect right rear turn signal.
2. Using TEST CONNECTOR KIT (Part Number:HD-41404), test continuity between [18B] terminal 2 and ground.
3. Is continuity present?

Figure 2.

a. **Yes.** Repair short to ground in right rear turn signal power circuit.
b. **No.** Replace right rear turn signal assembly.

4. Right Rear Turn Signal Component Test

1. Disconnect right rear turn signal.
2. Using TEST CONNECTOR KIT (Part Number:HD-41404), test continuity between [18A] terminal 1 and ground.
3. Is continuity present?

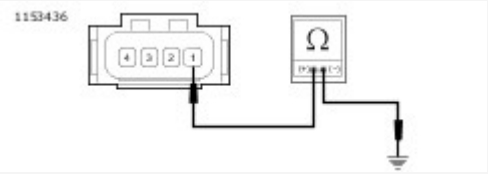

View interactive image

Figure 3.

a. **Yes.** Repair short to ground in right rear turn signal power circuit.
b. **No.** Replace right rear turn signal assembly.

The headlamp switch activates either the high beam or the low beam headlamps. When the ignition is turned ON, the BCM defaults to the low beam position. Pressing the upper part of the switch toggles to the high beam headlamp and the lower part of the switch toggles to the low beam headlamp.

- In the low position, the BCM supplies power to illuminate the low beam headlamp.
- Push the low position again, the BCM supplies power to the high beam headlamp to provide a flash to pass feature.
- In the high position, BCM supplies power to the high beam headlamp and sends a message to the speedometer over the CAN bus to illuminate the high beam indicator.

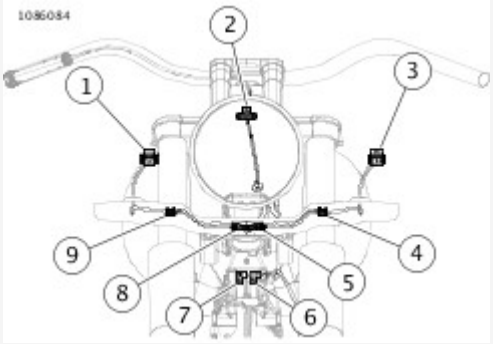

View interactive image

1	Right AUX/fog lamp [73R-2]
2	Headlamp [38-2]
3	Left AUX/fog lamp [73L-2]
4	Front left turn [31L-2]
5	Left AUX/fog lamp [73L]
6	Horn [122-1]
7	Horn [122-2]
8	Right AUX/fog lamp [73R]
9	Front right turn [31R-2]

Figure 1. Headlamp: FLSTC, FLSTN

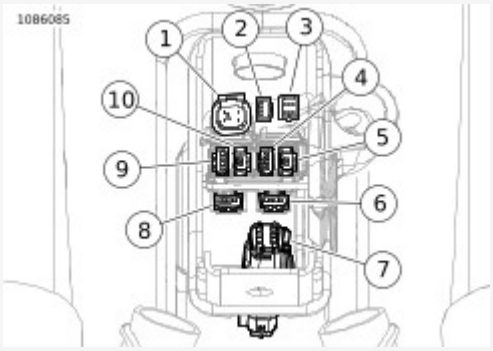

View interactive image

View interactive image

1	Headlamp [38]
2	Console [20]
3	TGS [204]
4	Right front lighting [31R]
5	Front WSS [167]
6	Left front lighting [31L]
7	USB caddy interconnect [329]
8	LHCM [24]
9	RHCM [22-1]
10	RHCM [22-2]

Figure 2. USB Caddy

Table 1. Code Description

DTC	DESCRIPTION
B2106	L4 output open
B2107	L4 output shorted high
B2108	L4 output shorted low
B2109	L4 output overloaded
B2131	High beam output open
B2132	High beam output shorted high
B2133	High beam output shorted low
B2134	High beam output overloaded
B2136	Low beam output open
B2137	Low beam output shorted high
B2138	Low beam output shorted low
B2139	Low beam output overloaded

Conditions for Setting

The headlamp DTCs may require either the high or low beam headlamp be requested on in order to set the DTC. Toggle back and

forth between the high and low beam headlamp positions to check DTCs on both circuits.

- DTC B2106 will set if the running lights circuit is below 120 milliamps. This will happen if all lights on the circuit are open.
- DTC B2109 will set if the switched power output circuit is above 10 Amps.
- DTC B2131 or B2136 will set if the corresponding headlamp circuit draws less than 1.2 Amps.
- DTC B2134 or B2139 will set if the corresponding headlamp circuit draws more than 12 Amps.

Diagnostic Tips

If the headlamp cannot be switched from one position to the other with no codes it could be an open switch causing the problem. See **Accessories, Horn, Lighting and Security → SWITCH DIAGNOSTICS**.

Turn IGN to ACC.

- If low beam illuminates, this circuit is shorted to voltage.
- If high beam illuminates, this circuit is shorted to voltage.

Connector Information

For additional information about the connectors in the following diagram(s) and diagnostic procedure(s), see **Wiring → Wire Harness Connectors → General**.

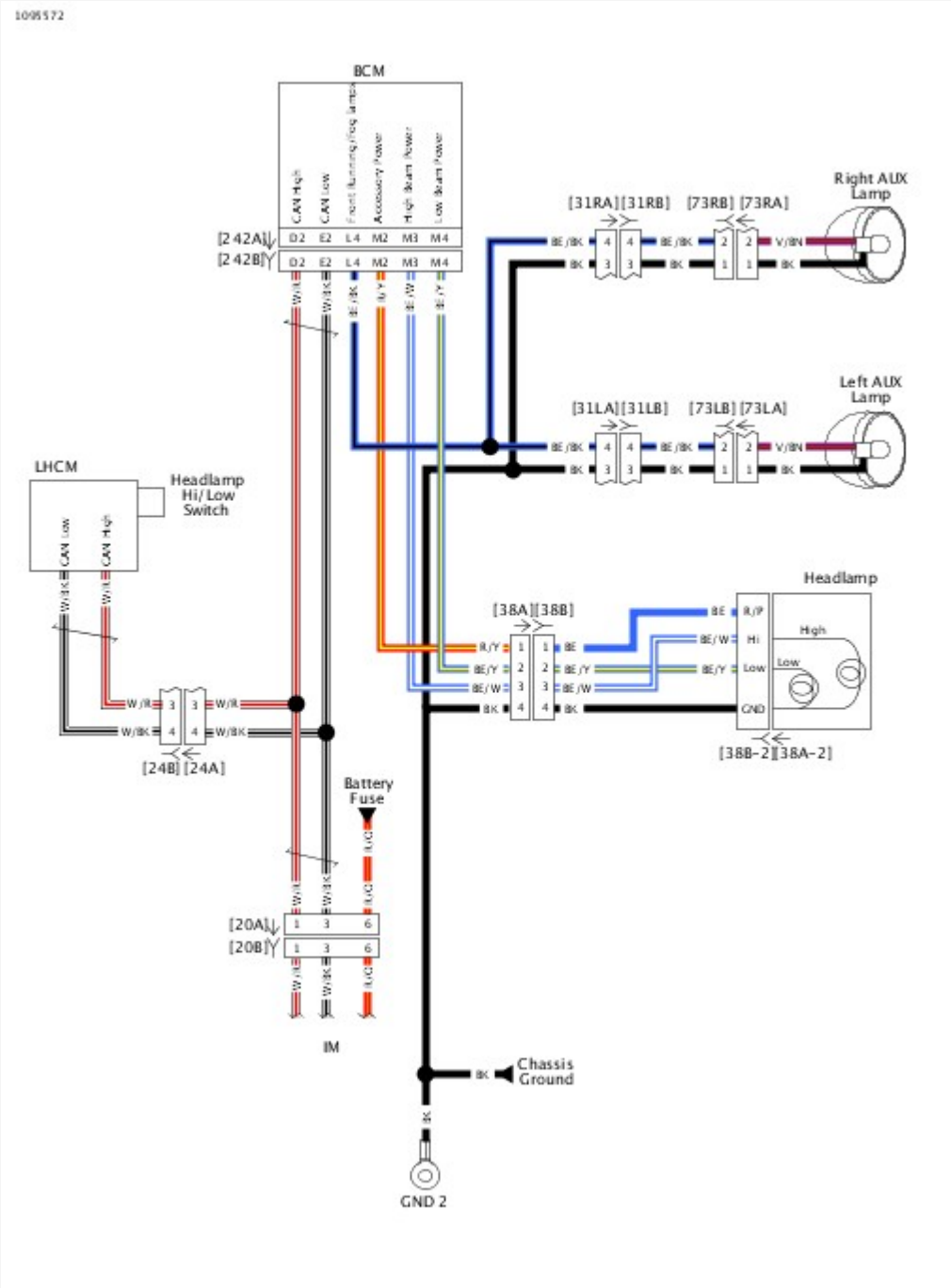

View interactive image

Figure 3. Headlamp and Auxiliary Lamps

Special Tools

Description	Part Number	Qty.
TEST CONNECTOR KIT	HD-41404	1
BCM CABLE	HD-50390-2	1
BCM OVERLAY	HD-50390-2-P	1

Table 1. Auxiliary Lamps Inoperative Diagnostic Faults

POSSIBLE CAUSES
Auxiliary lamp malfunction
LHCM auxiliary switch malfunction
Open in auxiliary power circuit
Open in auxiliary ground circuit

1. Auxiliary Lamps Operation Test

1. Turn IGN ON.
2. Activate aux lamp switch on LHCM.
3. Do auxiliary lamps illuminate?
   a. **Yes.** System operating properly. Intermittent perform wiggle test. See Initial Diagnostics → DIAGNOSTICS AND TROUBLESHOOTING → Wiggle Test.
   b. **No. Auxiliary lamps inoperative.** Verify DTC B2259 is not present. Refer to Initial Diagnostics → Initial Diagnostics → Diagnostics.
   c. **No. One or both auxiliary lamp is operative.** Go to Test 2.

2. Auxiliary Lamp Circuit Test

1. Turn IGN OFF.
2. Disconnect left and right auxiliary lamps [73L] and [73R].
3. Turn IGN ON.
4. Using TEST CONNECTOR KIT (Part Number:HD-41404), test voltage between [73B] terminal 1 and 2 of inoperative aux lamp.
5. Is battery voltage present?

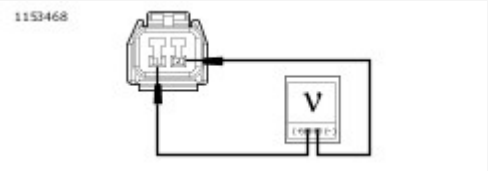

View interactive image

Figure 1.

a. **Yes.** Replace inoperative auxiliary lamp.
b. **No.** Go to Test 3.

3. Ground Circuit Open Test

1. Turn IGN OFF.
2. Test resistance between [73LB] or [73RB] terminal 1 and ground.
3. Is resistance less than 0.5 ohm?

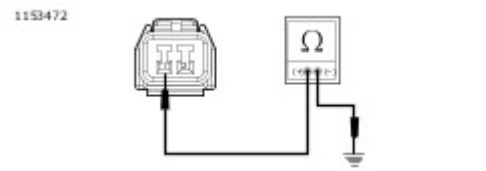

View interactive image

Figure 2.

a. **Yes.** Go to Test 4.
b. **No.** Repair open in ground circuit.

4. Power Circuit Open Test

1. Connect BCM CABLE (Part Number:HD-50390-2) between wire harness [242B] and [242A].
2. Verify BCM OVERLAY (Part Number:HD-50390-2-P) is in position on BOB.
3. Test resistance between BOB terminal L4 and [73B] terminal 2 of both left and right aux lamps.
4. Is resistance less than 0.5 ohms?

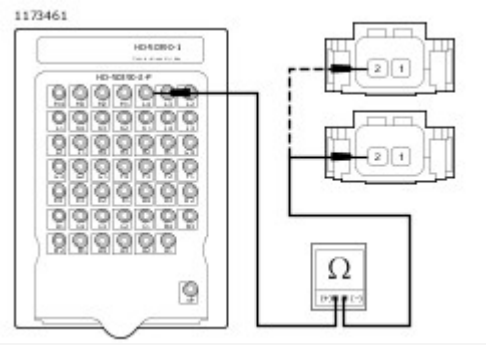

View interactive image

Figure 3.

a. **Yes.** Go to Test 5.
b. **No.** Repair open in power circuit.

5. Verify Aux Switch Function

1. Plug in a good known LHCM.

2. Turn IGN ON.
3. Do aux lamps function?
    a. **Yes.** Replace LHCM.
    b. **No.** Replace BCM.

Special Tools

Description	Part Number	Qty.
TEST CONNECTOR KIT	HD-41404	1
BREAKOUT BOX	HD-50390-1	1
BCM CABLE	HD-50390-2	1
BCM OVERLAY	HD-50390-2-P	1
1.5 MM TERMINAL EXTRACTOR TOOL	HD-50424	1

Table 1. DTC B2106, B2107 Diagnostic Faults

POSSIBLE CAUSES
Short to power in aux lamp circuit

1. Aux Lamp Circuit Test

1. Turn IGN OFF.
2. Disconnect BCM [242].
3. Using **1.5 MM TERMINAL EXTRACTOR TOOL (Part Number:HD-50424)**, remove terminal L4 from [242B].
4. Connect **BREAKOUT BOX (Part Number:HD-50390-1)** and **BCM CABLE (Part Number:HD-50390-2)** between wire harness [242B] and [242A]. See **Initial Diagnostics → DIAGNOSTIC TOOLS**.
5. Verify **BCM OVERLAY (Part Number:HD-50390-2-P)** is in position on BOB.
6. Turn IGN ON.
7. Using **TEST CONNECTOR KIT (Part Number:HD-41404)**, test voltage between extracted terminal L4 and ground.
8. Is voltage present?
    a. **Yes.** Repair short to voltage in the aux lamp circuit.
    b. **No.** **Go to Test 2.**

2. DTC Test

1. Connect [242].
2. Clear DTC.
3. Turn IGN ON.
4. Check DTCs.
5. Did DTC reset?
    a. **Yes.** Replace BCM.
    b. **No.** Condition not currently present.

Special Tools

Description	Part Number	Qty.
TEST CONNECTOR KIT	HD-41404	1
BCM CABLE	HD-50390-2	1
BCM OVERLAY	HD-50390-2-P	1

Table 1. Auxiliary Lamps Inoperative Diagnostic Faults: Japan

POSSIBLE CAUSES
Auxiliary lamp malfunction
Open in auxiliary power circuit
Open in auxiliary ground circuit

1. Auxiliary Lamps Operation Test

1. Turn IGN ON.
2. Do auxiliary lamps illuminate?
    a. **Yes.** System operating properly. Intermittent perform wiggle test. See Initial Diagnostics → DIAGNOSTICS AND TROUBLESHOOTING → Wiggle Test.
    b. **No. Auxiliary lamps inoperative.** Verify DTC code B2259 is not present. Refer to Initial Diagnostics → Initial Diagnostics → Diagnostics.
    c. **No. One or both auxiliary lamp is operative.** Go to Test 2.

2. Auxiliary Lamp Circuit Test

1. Turn IGN OFF.
2. Disconnect both [73LB] and [73RB] auxiliary lamps.
3. Turn IGN ON.
4. Using TEST CONNECTOR KIT (Part Number:HD-41404), test voltage between [73B] terminal 1 and 2 of inoperative aux lamp.
5. Is battery voltage present?

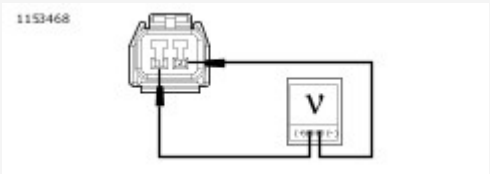

View interactive image

Figure 1.

    a. **Yes.** Replace inoperative auxiliary lamp.
    b. **No.** Go to Test 3.

3. Ground Circuit Open Test

1. Turn IGN OFF.
2. Test resistance between [73LB] and [73RB] terminal 1 and ground.
3. Is resistance less than 0.5 ohm?

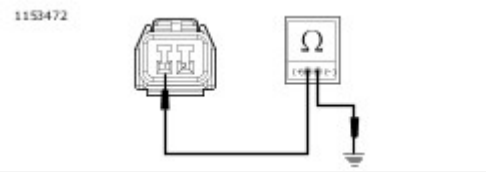

View interactive image

Figure 2.

a. **Yes.** Go to Test 4.
b. **No.** Repair open in ground circuit.

4. Power Circuit Open Test

1. Connect BCM CABLE (Part Number:HD-50390-2) between wire harness [242B] and [242A].
2. Verify BCM OVERLAY (Part Number:HD-50390-2-P) is in position on BOB.
3. Test resistance between BOB terminal L4 and [73B] terminal 2 of both left or right aux lamps.
4. Is resistance less than 0.5 ohms?

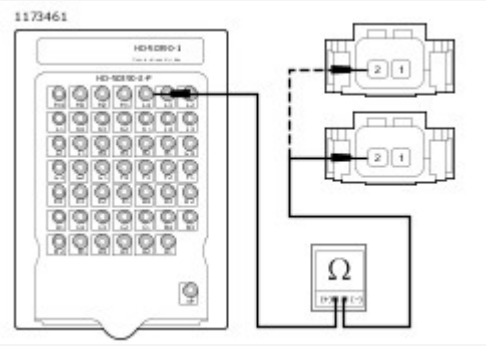

View interactive image

Figure 3.

a. **Yes.** Replace BCM.
b. **No.** Repair open in power circuit.

Special Tools

Description	Part Number	Qty.
BREAKOUT BOX	HD-50390-1	1
BCM CABLE	HD-50390-2	1
BCM OVERLAY	HD-50390-2-P	1

Table 1. DTC B2108, B2109 Diagnostic Faults

POSSIBLE CAUSES
Short to ground in aux lamp circuit
High current in aux lamp circuit
Accessory lighting overloading circuit

1. Aux Lamp Circuit Short to Ground Test

1. Turn IGN OFF.
2. Disconnect BCM [242].
3. Disconnect aux lamp [73RB] and [73LB].
4. Connect **BREAKOUT BOX (Part Number:HD-50390-1)** and **BCM CABLE (Part Number:HD-50390-2)** to wire harness [242B], leaving [242A] disconnected. See **Initial Diagnostics → DIAGNOSTIC TOOLS**.
5. Verify **BCM OVERLAY (Part Number:HD-50390-2-P)** is in position on BOB.
6. Test continuity between BOB terminal L4 and ground.
7. Is continuity present?

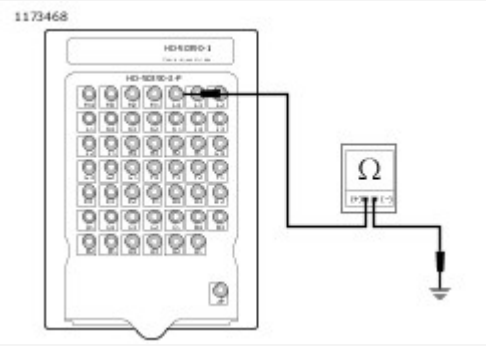

View interactive image

Figure 1.

a. **Yes.** Repair short to ground in (BE/BK) wire.
b. **No.** **Go to Test 2.**

2. Excessive Draw Test

1. Turn IGN ON-OFF-ON.
2. Check DTCs.
3. Is the code current?
    a. **Yes.** Go to Test 3.
    b. **No.** Replace aux lamp that was causing issue.

3. DTC Test

1. Turn IGN OFF.
2. Connect [242].
3. Clear DTC.
4. Turn IGN ON.
5. Check DTCs.
6. Did DTC reset?
    a. **Yes.** Replace BCM.
    b. **No.** Condition not currently present.

Special Tools

Description	Part Number	Qty.
TEST CONNECTOR KIT	HD-41404	1
1.5 MM TERMINAL EXTRACTOR TOOL	HD-50424	1

Table 1. DTC B2132 Diagnostic Faults

POSSIBLE CAUSES
Short to voltage in headlamp high beam circuit

1. Headlamp Test

1. Turn IGN OFF.
2. Disconnect BCM [242].
3. Using **1.5 MM TERMINAL EXTRACTOR TOOL (Part Number:HD-50424)**, remove terminal M3 from [242B].
4. Connect [242].
5. Turn IGN ON.
6. Using **TEST CONNECTOR KIT (Part Number:HD-41404)**, test voltage between extracted terminal M3 and ground.
7. Is voltage present?
    a. **Yes.** Repair short to voltage in (BE/W) wire.
    b. **No.** **Go to Test 2.**

2. DTC Test

1. Install terminal M3 from [242B].
2. Connect [242].
3. Clear DTCs.
4. Turn IGN ON.
5. Observe headlamp in high and low beam positions.
6. Check DTCs.
7. Did DTC reset?
    a. **Yes.** Replace BCM.
    b. **No.** Condition is intermittent. See **Initial Diagnostics → DIAGNOSTICS AND TROUBLESHOOTING → Wiggle Test**.

Special Tools

Description	Part Number	Qty.
TEST CONNECTOR KIT	HD-41404	1
BREAKOUT BOX	HD-50390-1	1
BCM CABLE	HD-50390-2	1
BCM OVERLAY	HD-50390-2-P	1

Table 1. DTC B2133, B2134 Diagnostic Faults

POSSIBLE CAUSES
Short to ground in high beam headlamp circuit
Accessory lighting overloading circuit
Headlamp malfunction

1. High Beam Headlamp Circuit Test

1. Turn IGN OFF.
2. Disconnect headlamp [38-2].
3. Connect **BREAKOUT BOX (Part Number:HD-50390-1)** and **BCM CABLE (Part Number:HD-50390-2)** to wire harness [242B], leaving [242A] disconnected. See **Initial Diagnostics → DIAGNOSTIC TOOLS**.
4. Verify **BCM OVERLAY (Part Number:HD-50390-2-P)** is in position on BOB.
5. Using **TEST CONNECTOR KIT (Part Number:HD-41404)**, test continuity between BOB terminal M3 and ground.
6. Is continuity present?

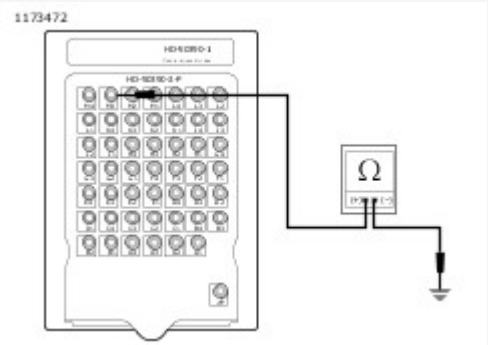

View interactive image

Figure 1.

a. **Yes.** Repair short to ground in (BE/W) wire.
b. **No.** **Go to Test 2.**

2. DTC Test

1. Connect [242].
2. Clear DTCs.
3. Turn IGN ON.
4. Check DTCs.
5. Did DTC reset?
    a. **Yes.** Replace BCM.
    b. **No.** Replace headlamp.

Special Tools

Description	Part Number	Qty.
TEST CONNECTOR KIT	HD-41404	1
BREAKOUT BOX	HD-50390-1	1
BCM CABLE	HD-50390-2	1
BCM OVERLAY	HD-50390-2-P	1

Table 1. High Beam Headlamp Inoperative, DTC B2131 Diagnostic Faults

POSSIBLE CAUSES
Open in high beam ground circuit
Open in high beam power circuit
Headlamp malfunction

1. Power Circuit Test

1. Turn IGN OFF.
2. Disconnect headlamp [38-2].
3. Turn IGN ON.
4. Switch headlamp to HI beam.
5. Using **TEST CONNECTOR KIT (Part Number:HD-41404)**, test voltage between [38B-2] terminal C (BE/W) and ground.
6. Is battery voltage present?

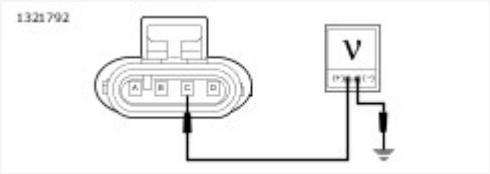

View interactive image

Figure 1.

a. **Yes.** **Go to Test 2.**
b. **No.** **Go to Test 3.**

2. Ground Circuit Open Test

1. Turn IGN OFF.
2. Test resistance between [38B-2] terminal A (BK) and ground.
3. Is resistance less than 0.5 ohm?

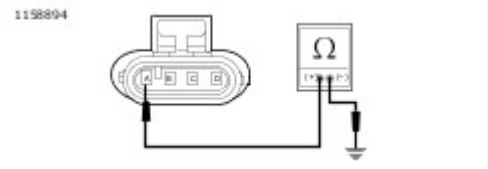

View interactive image

Figure 2.

a. **Yes.** Replace headlamp.
b. **No.** Repair open in (BK) ground wire.

3. Power Circuit Open Test

1. Turn IGN OFF.
2. Connect **BREAKOUT BOX (Part Number:HD-50390-1)** and **BCM CABLE (Part Number:HD-50390-2)** between wire harness [242B] and [242A].
3. Verify **BCM OVERLAY (Part Number:HD-50390-2-P)** is in position on BOB.
4. Test resistance between BOB terminal M3 and [38-2] terminal C (BE/W).
5. Is resistance less than 0.5 ohm?

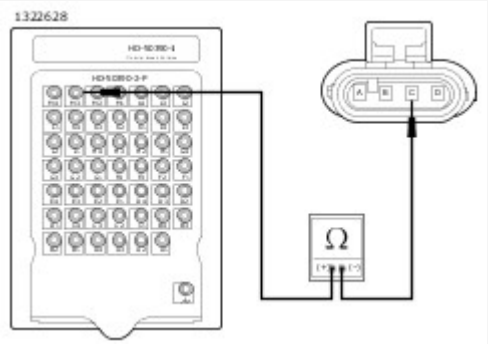

View interactive image

Figure 3.

a. **Yes.** Replace BCM.
b. **No.** Repair open in (BE/W) wire between BCM and headlamp.

Special Tools

Description	Part Number	Qty.
TEST CONNECTOR KIT	HD-41404	1
1.5 MM TERMINAL EXTRACTOR TOOL	HD-50424	1

Table 1. DTC B2137 Diagnostic Faults

POSSIBLE CAUSES
Short to voltage in headlamp low beam circuit

1. Headlamp Test

1. Turn IGN OFF.
2. Disconnect BCM [242].
3. Using **1.5 MM TERMINAL EXTRACTOR TOOL (Part Number:HD-50424)**, remove terminal (M4) from [242B].
4. Connect BCM [242].
5. Turn IGN ON.
6. Using **TEST CONNECTOR KIT (Part Number:HD-41404)**, test voltage between removed terminal (M4) and ground.
7. Is voltage present?
    a. **Yes.** Repair short to voltage in (BE/Y) wire.
    b. **No.** **Go to Test 2.**

2. DTC Test

1. Install terminal M4 from [242B].
2. Connect [242].
3. Clear DTCs.
4. Turn IGN ON.
5. Observe headlamp in high and low beam positions.
6. Check DTCs.
7. Did DTC reset?
    a. **Yes.** Replace BCM.
    b. **No.** Condition is intermittent. See **Initial Diagnostics → DIAGNOSTICS AND TROUBLESHOOTING → Wiggle Test**.

Special Tools

Description	Part Number	Qty.
TEST CONNECTOR KIT	HD-41404	1
BREAKOUT BOX	HD-50390-1	1
BCM CABLE	HD-50390-2	1
BCM OVERLAY	HD-50390-2-P	1

Table 1. DTC B2138, B2139 Diagnostic Faults

POSSIBLE CAUSES
Short to ground in low beam headlamp circuit
Accessory lighting overloading circuit
Headlamp malfunction

1. Low Beam Headlamp Circuit Test

1. Turn IGN OFF.
2. Disconnect headlamp [38-2].
3. Connect **BREAKOUT BOX (Part Number:HD-50390-1)** and **BCM CABLE (Part Number:HD-50390-2)** to wire harness [242B], leaving [242A] disconnected. See **Initial Diagnostics → DIAGNOSTIC TOOLS**.
4. Verify **BCM OVERLAY (Part Number:HD-50390-2-P)** is in position on BOB.
5. Using **TEST CONNECTOR KIT (Part Number:HD-41404)**, test continuity between BOB terminal (M4) and ground.
6. Is continuity present?

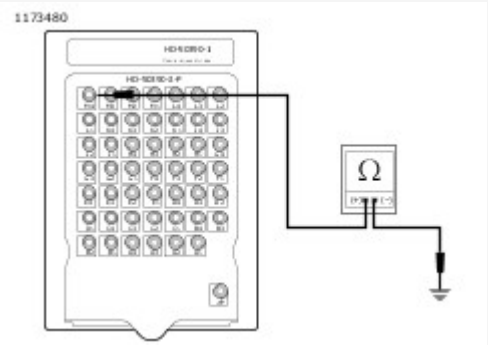

View interactive image

Figure 1.

a. **Yes.** Repair short to ground in (BE/Y) wire.
b. **No.** **Go to Test 2.**

2. DTC Test

1. Connect [242].
2. Clear DTCs.
3. Turn IGN ON.
4. Check DTCs.
5. Did DTC reset?
    a. **Yes.** Replace BCM.
    b. **No.** Replace headlamp.

Special Tools

Description	Part Number	Qty.
TEST CONNECTOR KIT	HD-41404	1
BREAKOUT BOX	HD-50390-1	1
BCM CABLE	HD-50390-2	1
BCM OVERLAY	HD-50390-2-P	1

Table 1. Low Beam Headlamp Inoperative, DTC B2136 Diagnostic Faults

POSSIBLE CAUSES
Open in low beam ground circuit
Open in low beam power circuit
Headlamp malfunction

1. Power Circuit Test

1. Turn IGN OFF.
2. Disconnect headlamp [38-2].
3. Turn IGN ON.
4. Switch headlamp to low beam.
5. Using **TEST CONNECTOR KIT (Part Number:HD-41404)**, test voltage between [38B-2] terminal B and ground.
6. Is battery voltage present?

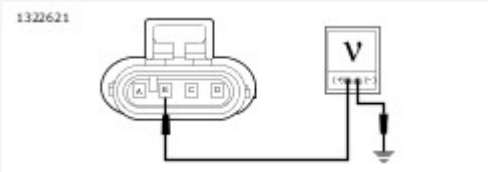

View interactive image

Figure 1.

a. **Yes.** **Go to Test 2.**
b. **No.** **Go to Test 3.**

2. Ground Circuit Open Test

1. Turn IGN OFF.
2. Test resistance between [38B-2] terminal A (BK) and ground.
3. Is resistance less than 0.5 ohm?

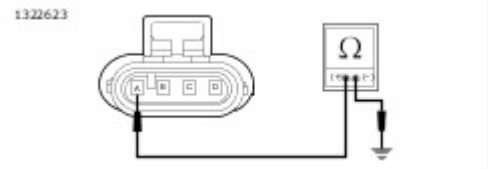

View interactive image

Figure 2.

a. **Yes.** Replace headlamp.
b. **No.** Repair open in (BK) ground wire.

3. Power Circuit Open Test

1. Turn IGN OFF.
2. Connect **BREAKOUT BOX (Part Number:HD-50390-1)** and **BCM CABLE (Part Number:HD-50390-2)** between wire harness [242B] and [242A].
3. Verify **BCM OVERLAY (Part Number:HD-50390-2-P)** is in position on BOB.
4. Test resistance between BOB terminal M4 and [38-2] B.
5. Is resistance less than 0.5 ohm?

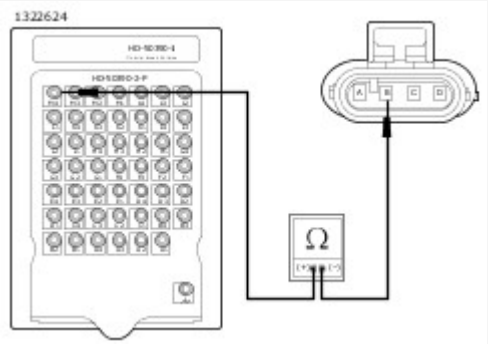

View interactive image

Figure 3.

a. **Yes.** Replace BCM.
b. **No.** Repair open in (BE/Y) wire between BCM and headlamp.

Special Tools

Description	Part Number	Qty.
DIGITAL TECHNICIAN II	HD-48650	1

See Figure 1 and Figure 4. The BCM controls the stop lamp based off inputs from the front and rear stop lamp switches. The front stop lamp switch is a mechanical switch. When the front brake lever is applied, the lever presses a mechanical switch and closes the contacts on the switch. The front stop lamp switch is part of the RHCM. When the switch is pressed, the RHCM sends a message to the BCM over the CAN bus and the BCM supplies power to the stop lamp.

The rear stop lamp switch is a pressure switch. When the rear brake is applied, it generates pressure in the brake fluid. This pressure in the fluid closes the contacts for the rear stop lamp switch. The BCM supplies power to the rear stop lamp switch. When the rear stop lamp switch is closed, it grounds the circuit from the BCM. This signals the BCM to supply power to the stop lamp.

Some models have no center stop lamp. Instead the turn signals are used for stop, turn and tail lamp functions. If DTC B2161 is set and all stop lamps are functional, it means the vehicle is improperly configured. Use DIGITAL TECHNICIAN II (Part Number:HD-48650) to configure properly.

Table 1. Code Description

DTC	DESCRIPTION
B2161	Brake lamp output open
B2163	Brake lamp output shorted low
B2164	Brake lamp output overloaded
B2223	Rear brake switch shorted low (light on)

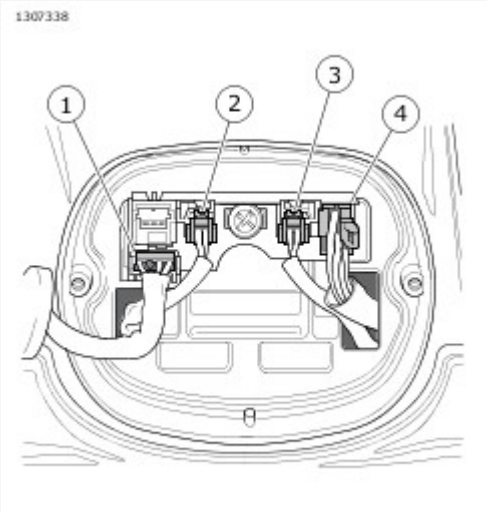

View interactive image

1	Tail lamp [93]
2	Left rear turn signal [19]

3	Right rear turn signal [18]
4	Rear light harness in circuit board [94]

Figure 1. Rear Lighting: FLHC/S

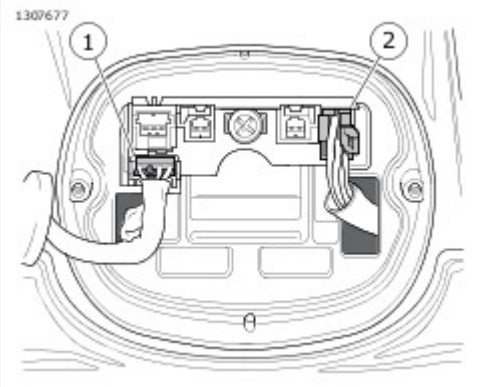

View interactive image

1	Tail lamp [93]
2	Rear light harness in circuit board [94]

Figure 2. Rear Lighting: FXLR

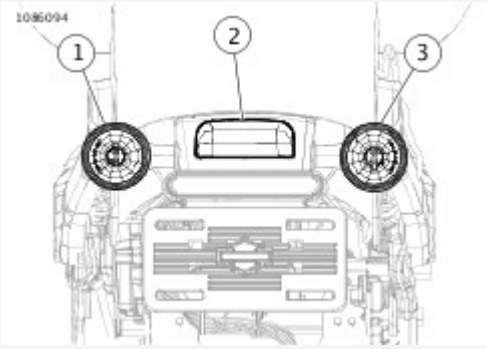

View interactive image

1	Left stop/turn lamp
2	License plate lamp
3	Right stop/turn lamp

Figure 3. Rear Lighting: FLSL, FLSB

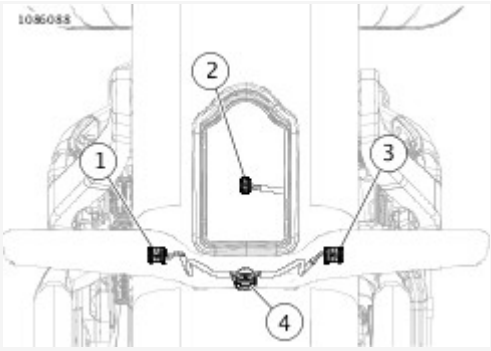

View interactive image

1	Left rear turn [18-2]
2	Stop/tail lamp [40-2]
3	Right rear turn [19-2]
4	Light bar interconnect [331]

Figure 4. Rear Lighting: FLDE

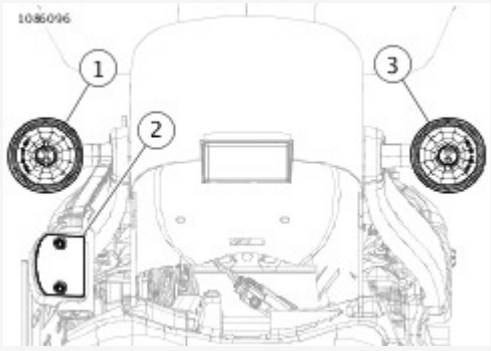

View interactive image

1	Left stop/turn lamp
2	License plate lamp
3	Right stop/turn lamp

Figure 5. Rear Lighting: FLFB/S, FXBB, FXBR/S, FXFB

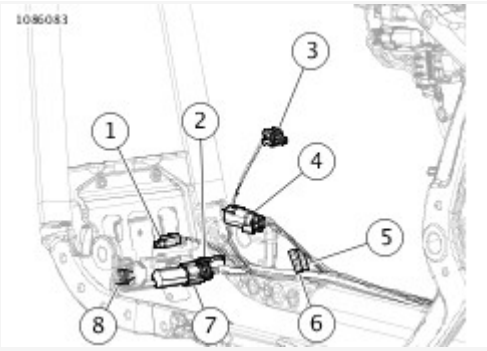

View interactive image

1	CKP [79]
2	Voltage regulator [77]
3	Oil pressure sensor [120]
4	Front HO2S [138]
5	Rear brake switch [121-1]
6	Rear brake switch [121-2]
7	JSS [133]
8	Stator [47]

Figure 6. Front of Engine: Typical

Conditions for Setting

The stop lamp circuit needs to see activation to set DTCs. Apply the front and rear brakes to verify stop lamp DTCs do not return.

- DTC B2161 is set when the stop lamp circuit current draw is less than 120 milliamps.
- DTC B2164 is set when the stop lamp circuit current draw is above 4 Amps.
- DTC B2223 is set when the brake switch input circuit is grounded for 120 seconds and the vehicle speed is above 72.4 km/h (45 mph).

The brake switch is normally open and supplies a path to ground when closed. In order to set a shorted brake switch code, the vehicle needs to be operated over 72.4 km/h (45 mph) for at least two minutes. DTC B2161 will only set when all loads on the circuit are inoperable.

Connector Information

For additional information about the connectors in the following diagram(s) and diagnostic procedure(s), see **Wiring → Wire Harness Connectors → General**.

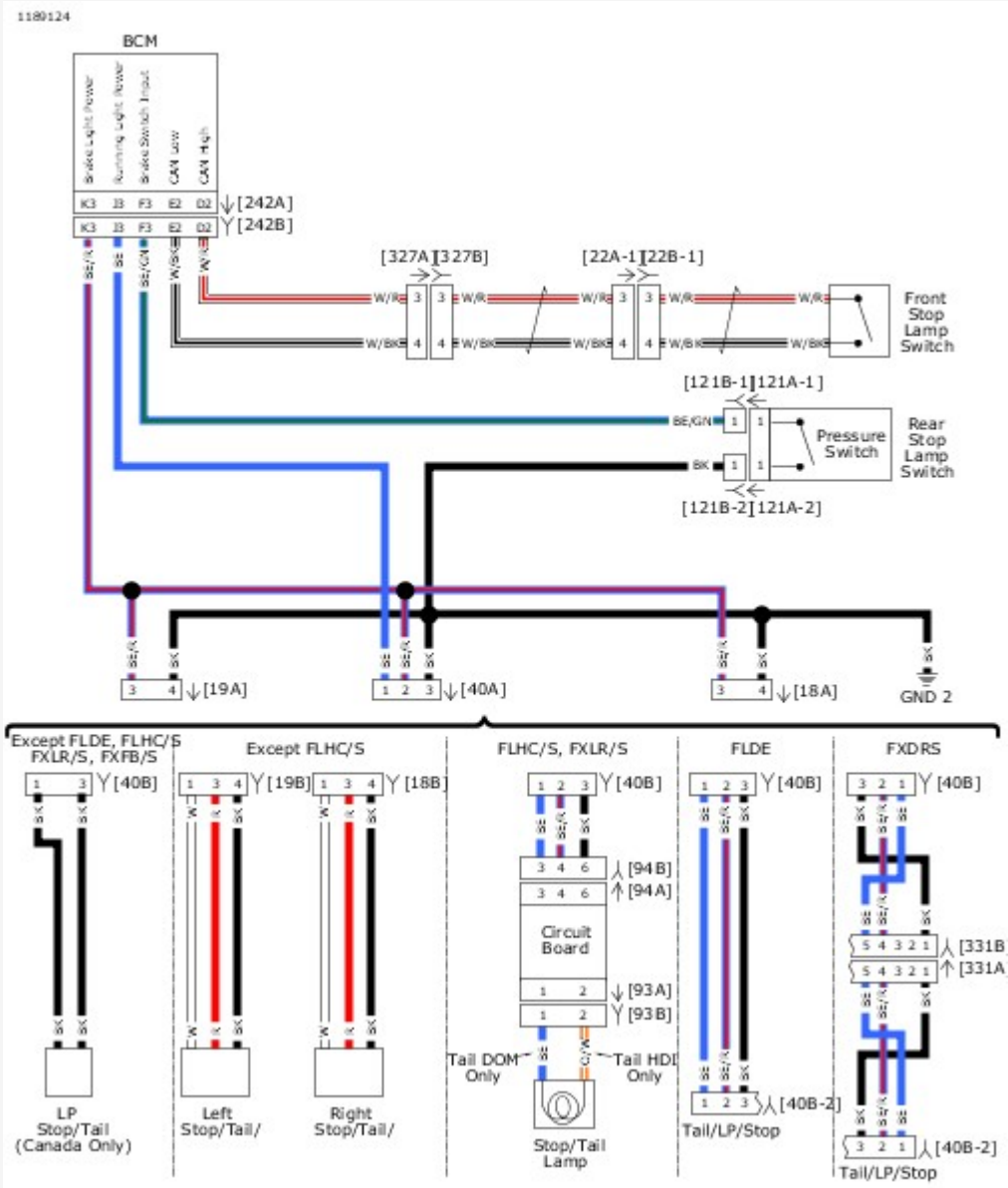

View interactive image

Figure 7. Stop/Tail Lamps

Special Tools

Description	Part Number	Qty.
TEST CONNECTOR KIT	HD-41404	1
BREAKOUT BOX	HD-50390-1	1
BCM CABLE	HD-50390-2	1
BCM OVERLAY	HD-50390-2-P	1
0.6 MM TERMINAL EXTACTOR TOOL	HD-50423	1

Table 1. Stop Lamp Always On, DTC B2223 Diagnostic Faults

POSSIBLE CAUSES
Brake switch malfunction
Short to voltage on stop lamp output circuit

1. Brake Switch Test

1. Turn IGN OFF.
2. Disconnect rear brake switch [121-1] (BE/GN) wire.
3. Turn IGN ON.
4. Does stop lamp go out?
    a. **Yes.** Replace rear brake switch.
    b. **No.** Go to Test 2.

2. Brake Switch Input Test

1. Turn IGN OFF.
2. Connect BREAKOUT BOX (Part Number:HD-50390-1) and BCM CABLE (Part Number:HD-50390-2) to wire harness [242B], leaving [242A] disconnected. See Initial Diagnostics → DIAGNOSTIC TOOLS.
3. Verify BCM OVERLAY (Part Number:HD-50390-2-P) is in position on BOB.
4. Using TEST CONNECTOR KIT (Part Number:HD-41404), test continuity between BOB terminal F3 and ground.
5. Is continuity present?

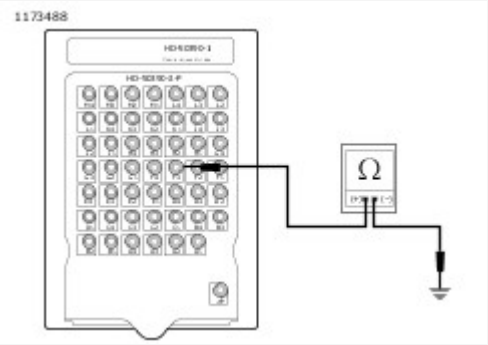

View interactive image

Figure 1.

a. **Yes.** Repair short to ground between [242B] and [121B-1] (BE/GN) wire.
b. **No.** Go to Test 3.

3. Stop Lamp Power Test

1. Using 0.6 MM TERMINAL EXTACTOR TOOL (Part Number:HD-50423), remove terminal K3 from [242B] (BE/R) wire.
2. Connect [242A].
3. Turn IGN ON.
4. Is stop lamp on?
   a. **Yes.** Repair short to voltage on stop lamp power circuit.
   b. **No.** Go to Test 4.

4. DTC Test

1. Remove BOB.
2. Insert terminal K3 into [242B] (BE/R) wire.
3. Connect [242].
4. Clear DTCs.
5. Operate system in the conditions for setting DTCs.
6. Check DTCs.
7. Did DTC reset?
   a. **Yes.** Replace BCM.
   b. **No.** Concern is intermittent. See Initial Diagnostics → DIAGNOSTICS AND TROUBLESHOOTING → Wiggle Test.

Special Tools

Description	Part Number	Qty.
TEST CONNECTOR KIT	HD-41404	1
BREAKOUT BOX	HD-50390-1	1
BCM CABLE	HD-50390-2	1
BCM OVERLAY	HD-50390-2-P	1

Table 1. DTC B2161 Diagnostic Faults

POSSIBLE CAUSES
Open in brake lamp ground circuit
Open in brake lamp power circuit
Bulb malfunction

1. Stop Lamp Inspection Test

1. Turn IGN OFF.
2. Inspect brake lamp.
3. Is lamp good?
    a. **Yes.** Go to Test 2.
    b. **No. Lamp is LED.** Go to Test 6.
    c. **No. Bulb does not work.**Replace bulb.

2. Stop Lamp Test

1. Disconnect tail lamp [93].
2. Turn IGN ON.
3. Using TEST CONNECTOR KIT (Part Number:HD-41404), with brake applied, test voltage between [93A] terminals 3 and 4.
4. Is battery voltage present?

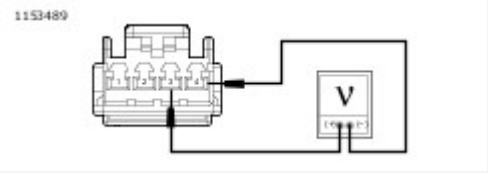

View interactive image

Figure 1.

    a. **Yes.** Replace stop lamp assembly.
    b. **No.** Go to Test 3.

3. Circuit Board Test

1. Turn IGN OFF.
2. Disconnect rear fender lights [94].
3. Turn IGN ON.
4. With brake applied, test voltage between [94B] terminals 4 and 6.
5. Is battery voltage present?

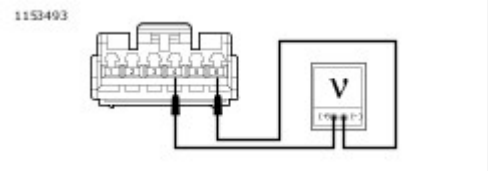

View interactive image

Figure 2.

a. **Yes.** Replace circuit board.
b. **No.** Go to Test 4.

4. Stop Lamp Circuit Test

1. With brake applied, test voltage between [94B] terminal 4 and ground.
2. Is battery voltage present?

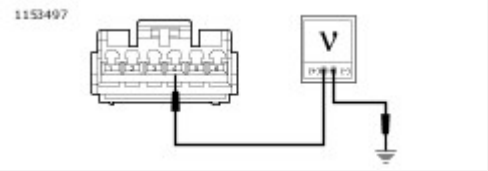

View interactive image

Figure 3.

a. **Yes.** Repair open in (BK) wire.
b. **No.** Go to Test 5.

5. Power Circuit Open Test

1. Turn IGN OFF.
2. Connect BREAKOUT BOX (Part Number:HD-50390-1) and BCM CABLE (Part Number:HD-50390-2) to wire harness [242B] and [242A].
3. Verify BCM OVERLAY (Part Number:HD-50390-2-P) is in position on BOB.
4. Connect [93] and [94].
5. Install stop lamp bulb.
6. Jumper BOB terminals M2 and K3.
7. Turn IGN ON.
8. Does stop lamp illuminate?

View interactive image

Figure 4.

a. **Yes.** Replace BCM.
b. **No.** Repair open in (BE/R) wire.

6. Light Circuit LED Test

1. Disconnect rear lighting [40].
2. Using [TEST CONNECTOR KIT (Part Number:HD-41404)](), with brake applied, test voltage between [40A] terminals 3 and 4.
3. Is battery voltage present?

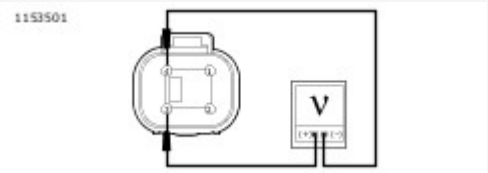

View interactive image

Figure 5.

a. **Yes.** Replace rear stop light assembly.
b. **No.** [Go to Test 7.]()

7. Stop Lamp Circuit Test

1. With brake applied, test voltage between [40A] terminal 3 and ground.
2. Is battery voltage present?

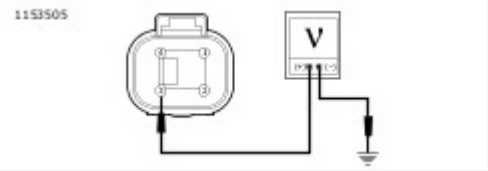

View interactive image

Figure 6.

a. **Yes.** Repair open in (BK) wire.
b. **No.** Go to Test 8.

8. Power Circuit Open Test

1. Turn IGN OFF.
2. Connect **BREAKOUT BOX (Part Number:HD-50390-1)** and **BCM CABLE (Part Number:HD-50390-2)** to wire harness [242B], leaving [242A] disconnected.
3. Verify **BCM OVERLAY (Part Number:HD-50390-2-P)** is in position on BOB.
4. Test resistance between BOB K3 and [40A] terminal 3.
5. Is resistance less than 0.5 ohms?

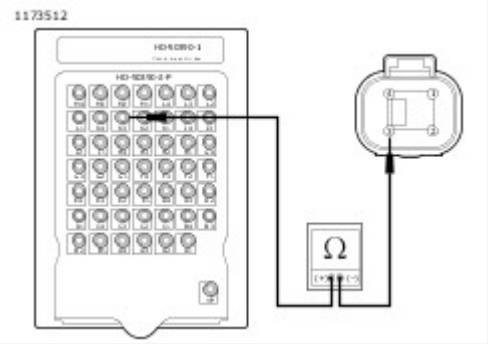

View interactive image

Figure 7.

a. **Yes.** Replace BCM.
b. **No.** Repair open in (BE/R) wire.

Special Tools

Description	Part Number	Qty.
TEST CONNECTOR KIT	HD-41404	1
BREAKOUT BOX	HD-50390-1	1
BCM CABLE	HD-50390-2	1
BCM OVERLAY	HD-50390-2-P	1

Table 1. DTC B2163, B2164 Diagnostic Faults

POSSIBLE CAUSES
Accessory tail lamp overloading circuit
Short to ground in stop lamp power circuit
Bulb malfunction

1. Stop Lamp Inspection Test

1. Turn IGN OFF.
2. Inspect right rear turn signal.
3. Is lamp good?
    a. **Yes.** Go to Test 2.
    b. **No. Lamp is LED.** Go to Test 3.
    c. **No. Bulb does not work.** Replace bulb.

2. Stop Lamp Power Circuit Short to Ground Test

1. Connect BREAKOUT BOX (Part Number:HD-50390-1) and BCM CABLE (Part Number:HD-50390-2) to wire harness [242B], leaving [242A] disconnected. See Initial Diagnostics → DIAGNOSTIC TOOLS.
2. Verify BCM OVERLAY (Part Number:HD-50390-2-P) is in position on BOB.
3. Using TEST CONNECTOR KIT (Part Number:HD-41404), test continuity between BOB terminal K3 and ground.
4. Is continuity present?

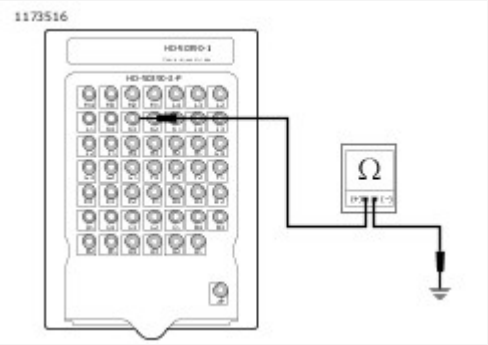

View interactive image

View interactive image

Figure 1.

a. **Yes.** Repair short to ground in (BE/R) wire.
b. **No.** Replace BCM.

3. LED Test

1. Turn IGN OFF.
2. Clear DTCs.
3. Disconnect [40].
4. Turn IGN ON.
5. With brake applied, verify DTC did not reset.
6. Did DTC B2163 or B2164 reset?
    a. **Yes.** Replace BCM.
    b. **No.** Replace rear brake light assembly.

These DTCs pertain to stuck switches or an internal fault in the LHCM, RHCM or BCM. If the switches are open they will not set DTCs. In most cases, there will be symptoms depending on which switch is malfunctioning.

Table 1. Switch Symptoms

OPEN SWITCH	SYMPTOM
High beam	Headlamp will not toggle to high beam
Low beam	Headlamp will not toggle to low beam
Left turn signal	Left turn signals will not function, PIN cannot be entered
Right turn signal	Right turn signals will not function, PIN cannot be entered
Trip	Odometer will not cycle through different settings
Aux lamps	Auxiliary lamps will not function
Front brake	Stop lamp will not function with brake lever pulled in
Clutch	Vehicle will not start unless in neutral
Horn	Horn will not sound
Hazard	Hazard lamps will not function
Start switch	Vehicle will not start (nothing clicks)
Engine stop switch	Vehicle will not start (nothing clicks)

Table 2. Code Description

DTC	DESCRIPTION
B1103	LHCM internal error
B1153	RHCM internal error
B2210	Engine stop switch inputs both open
B2212	Engine stop switch inputs both closed
B2250	Clutch switch stuck
B2251	Horn switch stuck
B2253	FTP switch stuck
B2254	Left turn switch stuck
B2259	Aux lamp switch stuck
B2260	Start switch stuck
B2261	Right turn switch stuck

B2262	Front brake switch stuck
B2263	Hazard switch stuck
B2270	BCM internal error

Conditions for Setting

If the switches are held or stuck for over 2 minutes with the IGN ON, a DTC will set for that switch. The engine stop is either in the run or the stop position. If the RHCM does not see either input or both inputs at the same time, DTC B2210 or B2212 will set.

For DTC B2262 or B2250 to be set, the vehicle has to be in operation for more than 2 minutes at speed above 48 km/h (30 mph). Historic codes may indicate the rider continually applies the brake or clutch. For example, coasting downhill with the clutch lever pulled in for more than 2 minutes will set codes.

Diagnostic Tips

Clear the DTCs and operate the vehicle to verify the DTCs are current. Stuck switch codes will take over two minutes to set. If vehicle will only start in neutral, verify proper alignment of the left hand control housing to the clutch perch. Misalignment or a gap between the two parts may affect clutch switch operation.

Table 1. DTC B1103, B1153 Diagnostic Faults

POSSIBLE CAUSES
Open in hand control module ground circuit
Open in hand control module power circuit

1. Switch Test

1. Clear DTC.
2. Turn IGN ON and wait 3 minutes.
3. Check DTCs.
4. Did DTC reset?
    a. **Yes.** Replace LHCM or RHCM.
    b. **No.** Condition not currently present.

Table 1. DTC B2210, B2212, B2250, B2251, B2253, B2254, B2260, B2261, B2262, B2263 Diagnostic Faults

POSSIBLE CAUSES
Clutch switch malfunction
Front brake switch malfunction

1. Switch Test

1. Clear DTC.
2. Turn IGN ON and wait 3 minutes.
3. Operate vehicle to meet conditions for setting DTC.
4. Check DTCs.
5. Did DTC reset?
    a. **Yes, DTC B2210 or B2212.** Replace run/stop key cap.
    b. **Yes, DTC B2250 or B2262.** Replace clutch or brake switch.
    c. **Yes, except DTC B2250 or B2262.** Replace LHCM or RHCM.
    d. **No.** Concern is intermittent. Switch may have been pressed for an extended period of time.

Table 1. DTC B2259 Diagnostic Faults

POSSIBLE CAUSES
Auxiliary lamp switch stuck

1. DTC Test

1. Clear DTC.
2. Turn IGN ON.
3. Check DTCs.
4. Did DTC reset?
    a. **Yes.** Replace LHCM.
    b. **No.** Condition not currently present.

Table 1. DTC B2270 Diagnostic Faults

POSSIBLE CAUSES
Open in BCM battery circuit
Open in BCM ground circuit

1. DTC Test

1. Clear DTC.
2. Turn IGN ON.
3. Check DTCs.
4. Did DTC reset?
    a. **Yes.** Replace BCM.
    b. **No.** Condition not currently present.

Table 1. Any Hand Control Switch Inoperative Diagnostic Faults

POSSIBLE CAUSES
Clutch switch malfunction
Brake switch malfunction

1. Switch Operation Test

1. Operate inoperative switch.
2. Does switch operate correctly?
    a. **Yes.** Condition not currently present.
    b. **No.** Replace LHCM or RHCM.

There are two stop lamp switches.

- The front stop lamp switch is a mechanical switch located on the right hand controls.
- The rear stop lamp switch is a pressure switch located in the brake line under the exhaust pipes.

During an ignition cycle, the ECM must receive a valid brake switch input. During the same ignition cycle the vehicle has to reach 50 km/h (31 mph) in third gear or higher and return to a stop three times without any brake switch signals in order to set DTC P0572.

Table 1. Code Description

DTC	DESCRIPTION
P0572	Brake switch low

Connector Information

For additional information about the connectors in the following diagram(s) and diagnostic procedure(s), see [Wiring → Wire Harness Connectors → General].

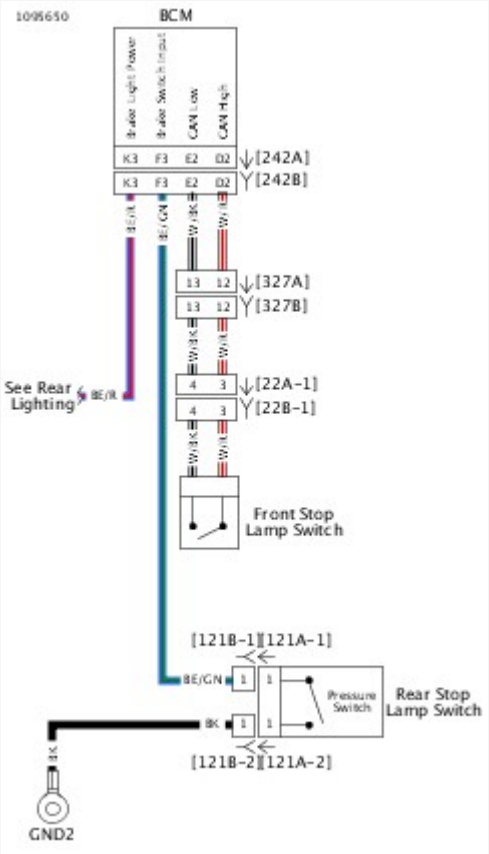

View interactive image

Figure 1. Brake Switch Circuit

Special Tools

Description	Part Number	Qty.
TEST CONNECTOR KIT	HD-41404	1
BREAKOUT BOX	HD-50390-1	1
BCM CABLE	HD-50390-2	1
BCM OVERLAY	HD-50390-2-P	1

Table 1. DTC P0572 Diagnostic Faults

POSSIBLE CAUSES
RHCM malfunction
Rear brake switch malfunction
Short to ground in rear brake circuit

1. Stop Lamp Test

1. Verify stop lamp is illuminated.
2. Is stop lamp illuminated?
    a. **Yes.** Go to Test 4.
    b. **No.** Go to Test 2.

2. Rear Brake Switch Test

1. Activate rear brake.
2. Does stop lamp illuminate?
    a. **Yes.** Replace RHCM.
    b. **No.** Go to Test 3.

3. Brake Switch Circuit Test

1. Turn IGN OFF.
2. Connect BREAKOUT BOX (Part Number:HD-50390-1) and BCM CABLE (Part Number:HD-50390-2) to wire harness [242B], leaving [242A] disconnected. See Initial Diagnostics → DIAGNOSTIC TOOLS.
3. Verify BCM OVERLAY (Part Number:HD-50390-2-P) is in position on BOB.
4. Disconnect rear stop lamp switch [121B-1].
5. Using TEST CONNECTOR KIT (Part Number:HD-41404), test resistance between BOB terminal F3 and [121B-1] (BE/GN) wire.
6. Is resistance less than 0.5 ohms?

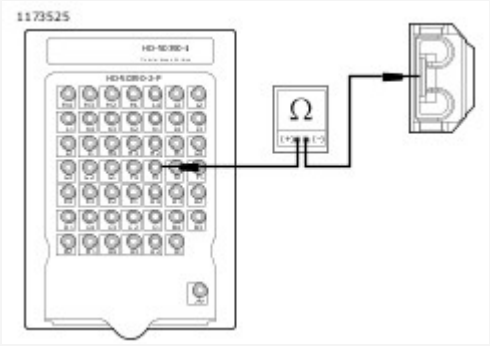

View interactive image

Figure 1.

a. **Yes.** Replace rear brake switch.
b. **No.** Repair open in (BE/GN) wire.

4. Brake Switch Circuit Short to Ground Test

1. Turn IGN OFF.
2. Connect **BREAKOUT BOX (Part Number:HD-50390-1)** and **BCM CABLE (Part Number:HD-50390-2)** to wire harness [242B], leaving [242A] disconnected. See **Initial Diagnostics → DIAGNOSTIC TOOLS**.
3. Verify **BCM OVERLAY (Part Number:HD-50390-2-P)** is in position on BOB.
4. Using **TEST CONNECTOR KIT (Part Number:HD-41404)**, test continuity between BOB terminal F3 and ground.
5. Is continuity present?

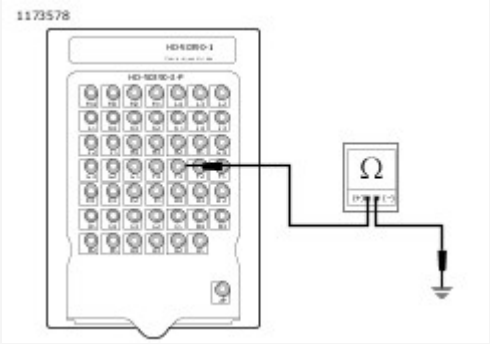

View interactive image

Figure 2.

a. **Yes.** **Go to Test 5.**
b. **No.** Replace RHCM.

5. Brake Switch Short to Ground Test

1. Disconnect rear stop lamp switch [121B-1].
2. Test continuity between BOB terminal F3 and ground.
3. See **Figure 2**. Is continuity present?
   a. **Yes.** Repair short to ground in [242B] terminal F3 (BE/GN) wire.
   b. **No.** Replace rear brake switch.

The running lamps consist of the front position lamp (HDI), located in the headlamp housing, the front running lamps, the license plate lamp and the tail lamp. The running lamps are powered by the BCM through terminal J3 and M2 (if equipped).

Table 1. Code Description

DTC	DESCRIPTION
B2168	Running lights output shorted low
B2169	Running lights output overloaded

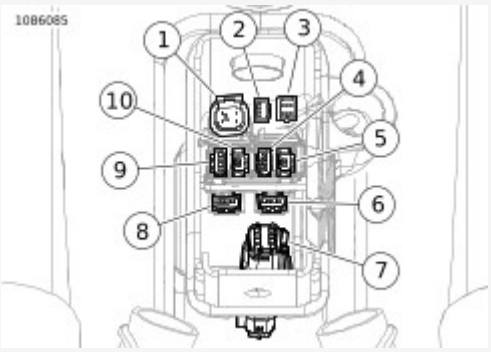

View interactive image

1	Headlamp [38]
2	Console [20]
3	TGS [204]
4	Right front lighting [31R]
5	Front WSS [167]
6	Left front lighting [31L]
7	USB caddy interconnect [329]
8	LHCM [24]
9	RHCM [22-1]
10	RHCM [22-2]

Figure 1. USB Caddy

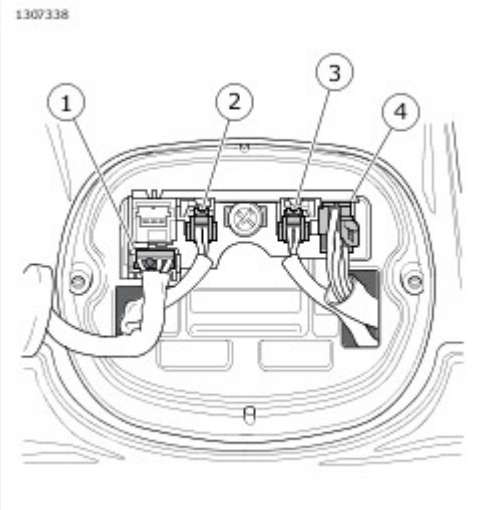

View interactive image

1	Tail lamp [93]
2	Left rear turn signal [19]
3	Right rear turn signal [18]
4	Rear light harness in circuit board [94]

Figure 2. Rear Lighting: FLHC/S

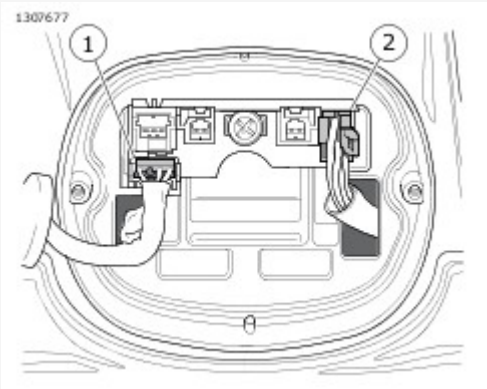

View interactive image

1	Tail lamp [93]
2	Rear light harness in circuit board [94]

Figure 3. Rear Lighting: FXLR

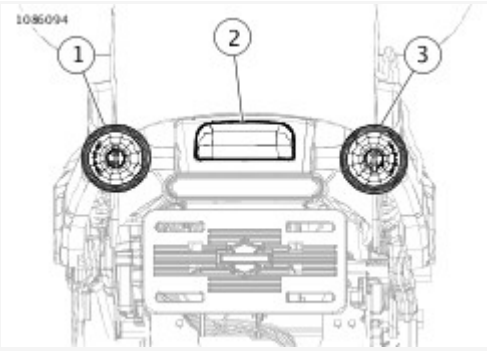

View interactive image

1	Left stop/turn lamp
2	License plate lamp
3	Right stop/turn lamp

Figure 4. Rear Lighting: FLSL, FLSB

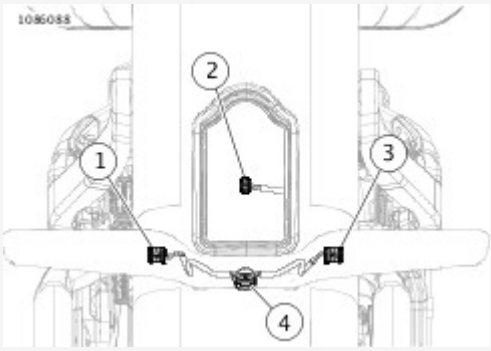

View interactive image

1	Left rear turn [18-2]
2	Stop/tail lamp [40-2]
3	Right rear turn [19-2]
4	Light bar interconnect [331]

Figure 5. Rear Lighting: FLDE

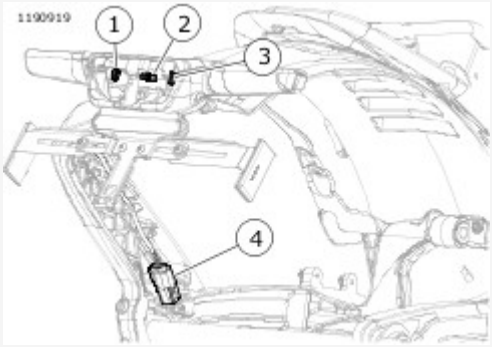

View interactive image

1	Left rear turn [19]
2	Stop, tail, turn, LP lamp [40-2]
3	Right rear turn [18]
4	Rear light bar interconnect [331]

Figure 6. Rear Lights (FXDRS)

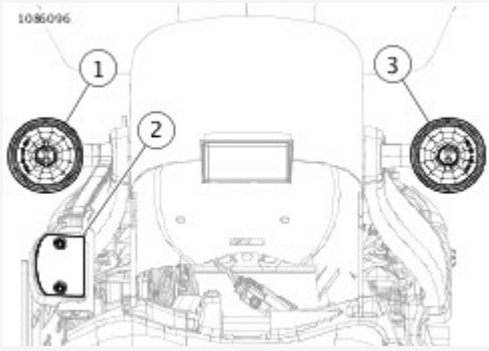

View interactive image

1	Left stop/turn lamp
2	License plate lamp
3	Right stop/turn lamp

Figure 7. Rear Lighting: FLFB/S, FXBB, FXBR/S, FXFB

Conditions for Setting

The running lamps circuit powers up when the ignition is turned on. On HDI models, the running lamp circuit is also powered in the ACC position. Any running lamp related DTCs will set shortly after the ignition is turned on. DTC B2169 will set if the running lights circuit is above 3 Amps.

Connector Information

For additional information about the connectors in the following diagram(s) and diagnostic procedure(s), see [Wiring → Wire Harness Connectors → General](#).

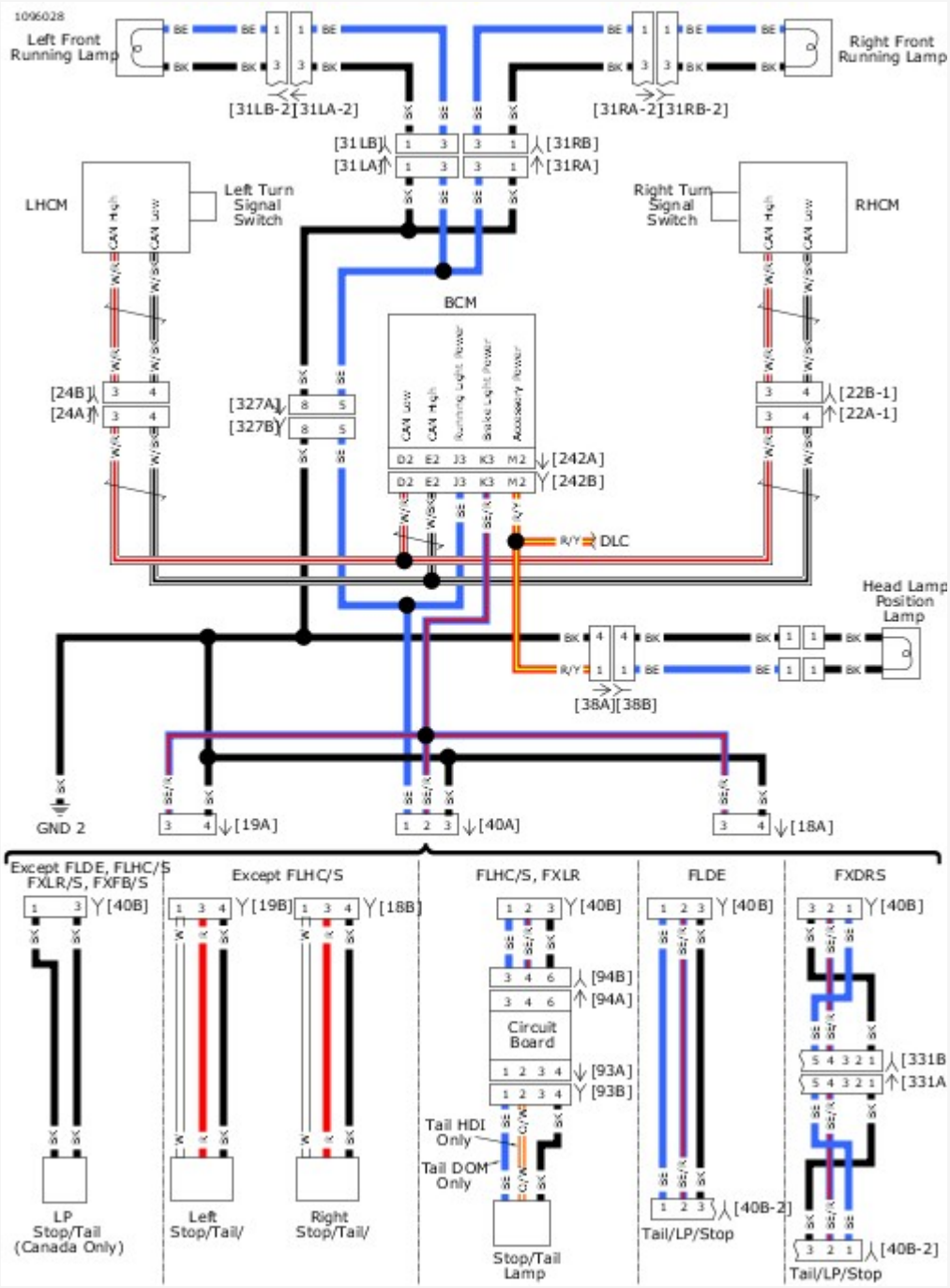

View interactive image

Figure 8. Running Lamps

Special Tools

Description	Part Number	Qty.
TEST CONNECTOR KIT	HD-41404	1

Table 1. Front Running Lamps Inoperative Diagnostic Faults

POSSIBLE CAUSES
Open running lights circuit
Lamp malfunction
Open ground circuit

NOTE

This test refers to US running lamps integrated with the front turn signals.

1. Front running Lamp Inspection Test

1. Inspect front running lamp.
2. Is the running lamp LED?
    a. **Yes.** Go to Test 3.
    b. **No.** Go to Test 2.

2. Running Lamp Test

1. Inspect inoperative bulb.
2. Is bulb good?
    a. **Yes.** Go to Test 3.
    b. **No.** Replace bulb.

3. Ground Circuit Test

1. Turn IGN OFF.
2. Using TEST CONNECTOR KIT (Part Number:HD-41404), test resistance between running lamp bulb socket ground and ground.
3. Is resistance less than 0.5 ohm?
    a. **Yes.** Repair open in running lamp power circuit (BE) wire.
    b. **No.** Repair open in (BK) ground circuit.

Special Tools

Description	Part Number	Qty.
TEST CONNECTOR KIT	HD-41404	1

Table 1. Rear Running Lamps Inoperative Diagnostic Faults

POSSIBLE CAUSES
Open running lights circuit
Lamp malfunction
Open ground circuit

1. Running Lamp Inspection Test

1. Inspect running lamp.
2. Is the running lamp LED?
    a. **Yes.** Go to Test 3.
    b. **No.** Go to Test 2.

2. Bulb Test

1. Inspect inoperative bulb and socket.
2. Is bulb and socket good?
    a. **Yes.** Go to Test 3.
    b. **No.** Replace bulb.

3. Ground Circuit Test

1. Turn IGN OFF.
2. Using TEST CONNECTOR KIT (Part Number:HD-41404), test resistance between tail lamp bulb socket terminal ground and ground.
3. Is resistance less than 0.5 ohm?
    a. **Yes.** Go to Test 4.
    b. **No.** Repair open in ground circuit (BK) wire.

4. Running Lamps Power Test

1. Disconnect rear lighting harness [40], [18] and [19].
2. Turn IGN ON.
3. Using TEST CONNECTOR KIT (Part Number:HD-41404), test voltage between [40A] terminal 1 and ground.
4. Is voltage present?

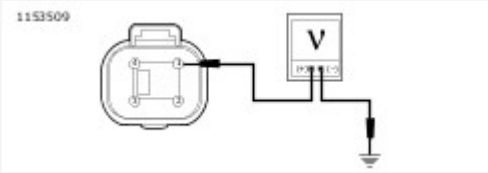

View interactive image

Figure 1.

a. **Yes.** Replace running lamp assembly.
b. **No.** Repair open in (BE) wire.

Special Tools

Description	Part Number	Qty.
TEST CONNECTOR KIT	HD-41404	1
BREAKOUT BOX	HD-50390-1	1
BCM CABLE	HD-50390-2	1
BCM OVERLAY	HD-50390-2-P	1

Table 1. License Plate Lamp Inoperative Diagnostic Faults

POSSIBLE CAUSES
Open running lights circuit
Lamp malfunction
Open ground circuit

1. License Plate Lamp Inspection Test

1. Turn IGN OFF.
2. Inspect license plate lamp.
3. Is lamp good?
    a. **Yes.** Go to Test 2.
    b. **No. Lamp is LED.** Go to Test 2.
    c. **No. Bulb does not work.** Replace bulb.

2. License Plate Lamp Circuit Test

1. Disconnect rear lighting [40].
2. Using TEST CONNECTOR KIT (Part Number:HD-41404), test voltage [40A] terminal 1 and 3.
3. Is voltage present?

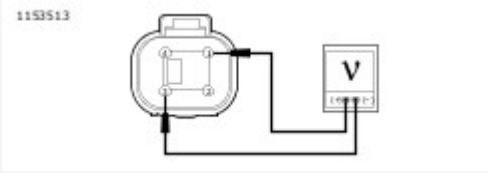

View interactive image

Figure 1.

    a. **Yes.** Replace LP light assembly.
    b. **No.** Go to Test 3.

3. License Plate Lamp Ground Circuit Test

1. Test voltage between [40A] terminal 1 and ground.
2. Is voltage present?

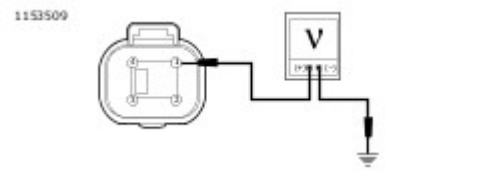

View interactive image

Figure 2.

a. **Yes.** Repair open in (BK) wire.
b. **No.** Go to Test 4.

4. License Plate Lamp Power Circuit Open Test

1. Turn IGN OFF.
2. Connect BREAKOUT BOX (Part Number:HD-50390-1) and BCM CABLE (Part Number:HD-50390-2) to wire harness [242B], leaving [242A] disconnected.
3. Verify BCM OVERLAY (Part Number:HD-50390-2-P) is in position on BOB.
4. Test resistance between BOB J3 and [40A] terminal 1.
5. Is resistance less than 0.5 ohms?

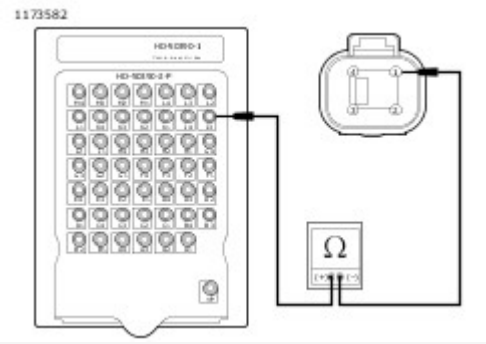

View interactive image

Figure 3.

a. **Yes.** Replace BCM.
b. **No.** Repair open in (BE/R) wire.

Special Tools

Description	Part Number	Qty.
TEST CONNECTOR KIT	HD-41404	1
BREAKOUT BOX	HD-50390-1	1
BCM CABLE	HD-50390-2	1
BCM OVERLAY	HD-50390-2-P	1

Table 1. DTC B2168, B2169 Diagnostic Faults

POSSIBLE CAUSES
Running lights circuit resistance too low
Short to ground in running lights power circuit
Accessory lighting overloading circuit

1. Right Rear Turn Lamp Circuit Test

1. Turn IGN OFF.
2. Disconnect right rear turn lamp [18].
3. Clear DTC.
4. Turn IGN OFF-ON.
5. Did DTC reset?
    a. **Yes.** Go to Test 2.
    b. **No.** Repair short to ground or high current draw in right rear turn signal harness in the running lamp power circuits.

2. Left Rear Turn Lamp Circuit Test

1. Turn IGN OFF.
2. Disconnect left rear turn lamp [19].
3. Clear DTC.
4. Turn IGN OFF-ON.
5. Did DTC reset?
    a. **Yes.** Go to Test 3.
    b. **No.** Repair short to ground or high current draw in left rear turn signal harness in the running lamp power circuits.

3. Tail Lamp Circuit Test

1. Turn IGN OFF.
2. Disconnect tail lamp [40].
3. Clear DTC.
4. Turn IGN OFF-ON.
5. Did DTC reset?

a. **Yes.** Go to Test 4.
b. **No.** Repair short to ground or high current draw in tail lamp harness in the running lamp power circuits.

4. Right Front Running Lamp Circuit Test

1. Turn IGN OFF.
2. Disconnect front turn signal [31R].
3. Clear DTC.
4. Turn IGN OFF-ON.
5. Did DTC reset?
   a. **Yes.** Go to Test 5.
   b. **No.** Repair short to ground in right front running lamps harness.

5. Left Front Running Lamp Circuit Test

1. Turn IGN OFF.
2. Disconnect front turn signal [31L].
3. Clear DTC.
4. Turn IGN OFF-ON.
5. Did DTC reset?
   a. **Yes.** Go to Test 6.
   b. **No.** Repair short to ground in front running lamps harness.

6. BCM Test

1. Turn IGN OFF.
2. Disconnect BCM [242].
3. Connect BREAKOUT BOX (Part Number:HD-50390-1) and BCM CABLE (Part Number:HD-50390-2) to wire harness [242B], leaving [242A] disconnected. See Initial Diagnostics → DIAGNOSTIC TOOLS.
4. Verify BCM OVERLAY (Part Number:HD-50390-2-P) is in position on BOB.
5. Using TEST CONNECTOR KIT (Part Number:HD-41404), test continuity between BOB terminal J3 and ground.
6. Is continuity present?

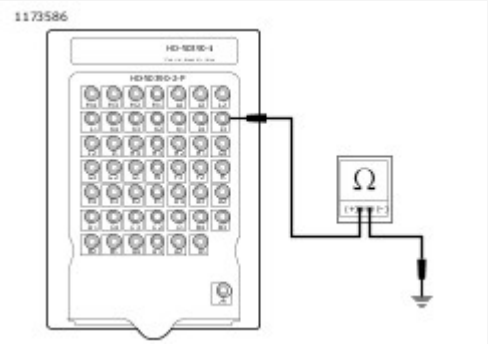

View interactive image

Figure 1.

a. **Yes.** Repair short to ground in (BE) wire.
b. **No.** Replace BCM.

See Figure 1 and Figure 2. The security lamp indicates system status. Refer to Table 1.

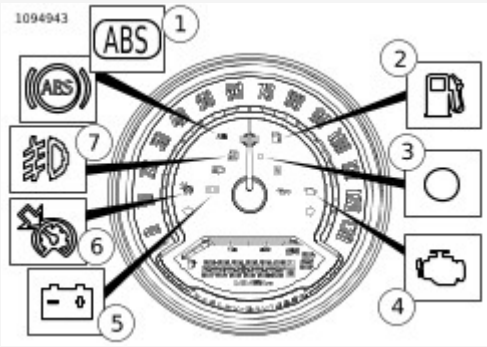

View interactive image

1	ABS (km/h ABS icon lamp also shown)
2	Low fuel
3	Security
4	Check engine
5	Battery
6	Cruise enabled
7	Aux lighting

Figure 1. Indicator Lamps (Except FXBB, FXBR)

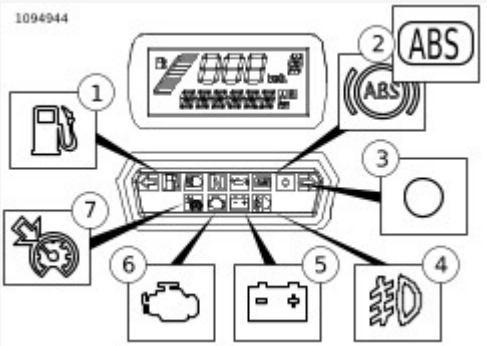

View interactive image

1	Low fuel
2	ABS (km/h ABS icon lamp also shown)
3	Security
4	Aux lighting

5	Battery
6	Check engine
7	Cruise enabled

Figure 2. Indicator Lamps (FXBB, FXBR)

Table 1. Security Lamp Status

LAMP	MODE
Does not flash.	Security system not armed.
Flashes every second.	Two minute timeout after failed PIN entry attempt or a battery reconnect has occurred while armed.
Flashes every 2.5 seconds.	Security system armed.
Flashes four times a second.	PIN entry mode.
Stays on solid with IGN OFF.	Arming is starting up. You have five seconds before system is armed.
Stays on solid with IGN ON.	If solid for more than four seconds after IGN ON, a current DTC is present.

NOTE

Always disarm the vehicle by turning the IGN ON with the fob present before removing or disconnecting the battery. This prevents the siren (if installed) from activating.

If the vehicle has a security system, the functionality is provided by a security BCM. The BCM will disable the starter and ignition system. Additional functions include the ability to alternately flash the left and right turn signals and sound a siren (if equipped) if a theft attempt is detected.

NOTE

The siren must be in the chirp mode for the siren to chirp on arming or disarming. See **Accessories, Horn, Lighting and Security → SIREN → Siren Chirp Mode Confirmation**.

Conditions that trigger a security event when system is armed include:

- **Detecting tampering of the ignition circuit:** Turn signals flash three times, optional siren chirps once and then turns off. If the tampering continues, a second warning will activate after four seconds. Continued tampering will cause the alarm to activate for 30 seconds and then turn off. The two warnings/alarm cycle is repeated for each tampering incident. The system will remain armed and the vehicle will be immobilized.
- **Detecting vehicle movement:** Turn signals flash three times, optional siren chirps once and then turns off. If the vehicle is not returned to its original position, a second warning will activate after four seconds. If the vehicle is not returned to its original position, the alarm activates for 30 seconds then turns off. The two warnings/alarm cycle may repeat a maximum of 10 times with a 10 second pause between cycles.
- **Detecting that a battery or ground disconnect has occurred while armed:** The optional siren activates its self-alarm mode. Turn signals will not flash.

Special Tools

Description	Part Number	Qty.
DIGITAL TECHNICIAN II	HD-48650	1

The following information applies only to vehicles equipped with the security.

- **Personal code disarming:** If the fob is not available or inoperative, the BCM allows the rider to disable the security alarm and immobilization functions with a five-digit personal code.
- **Arming confirmation:** When the security system is armed, the system provides visual feedback (confirmation) to the rider by flashing the turn signals and an audible "chirp" if equipped with the optional smart siren and chirp mode is enabled.
- **Disarming confirmation:** When the security system is disarmed, the system provides an audible "chirp" (confirmation) if equipped with the optional smart siren and chirp mode is enabled.
- **Transport mode:** It is possible to arm the security system without enabling the motion detector for one ignition cycle. This allows the vehicle to be moved in an immobilized state.
- **Starter/ignition disable:** When armed the starter and ignition system are disabled.
- **Security system alarm:** See **Accessories, Horn, Lighting and Security → SIREN**. The system will alternately flash the left and right turn signals and sound an optional Smart Siren if a vehicle security condition is detected while the system is armed.
- **Dealer service mode:** This mode allows the dealer to disable security system via **DIGITAL TECHNICIAN II (Part Number:HD-48650)**. Dealer service mode is exited when the IGN is turned ON with the assigned fob in range.

A warning consists of three alternate flashes of the turn signals and chirp from the optional smart siren. Warnings are issued from an armed security system in the following order:

1. **First warning:** A warning is issued whenever a person without a fob present or with the system armed attempts to move the vehicle or turns the ignition switch to **IGN.**
2. **Second warning:** If the motion continues or the ignition switch is not turned back to **OFF**, a second warning is issued within four seconds of the first.
3. **Alarm:** If the motion continues or the ignition switch is not turned to **OFF** past the second warning, the smart security system will go into full alarm.

The H-DSSS automatically arms within 5 seconds when the vehicle is parked and the ignition switch is turned to **OFF** or **ACC** and motion is not detected.

On arming, the turn signals flash twice and the smart siren will chirp twice if chirp function is activated. While armed, the security lamp will flash once every 2.5 seconds. Refer to **Accessories, Horn, Lighting and Security → SECURITY SYSTEM → Security Lamp → Security Lamp Status**.

There are two ways to disarm the H-DSSS:

- Automatic disarming.
- Using the PIN.

Automatic Disarming

Always have the fob present when riding, loading, fueling, moving, parking or servicing the vehicle. The vehicle can be moved in an armed state with the fob present without triggering the alarm. The H-DSSS disarms automatically when the ignition switch is turned to ON.

On disarming, the smart siren will chirp once (if chirp function is activated) and the security lamp will turn ON solid for 4 seconds then go out. Refer to Accessories, Horn, Lighting and Security → SECURITY SYSTEM → Security Lamp → Security Lamp Status.

Disarming with a PIN

See Accessories, Horn, Lighting and Security → SERVICE AND EMERGENCY FUNCTIONS AND CONFIGURATIONS to enter an initial PIN to enable the system.

If you make an error while disarming the security system using the PIN, the alarm will activate for 30 seconds after the last digit is entered. Refer to Table 1.

Table 1. Entering a PIN to Disarm Harley-Davidson Smart Security System

STEP NO.	ACTION	WAIT FOR CONFIRMATION	NOTES
1	If necessary, verify the current 5-digit PIN.		Should be recorded on wallet card.
2	Turn ignition to **IGN**.	If armed, the odometer window display will read: ENTER PIN and the security lamp will be flashing at a fast rate. The headlight will not be on.	
3	Press and release the left turn signal switch.	In the odometer window, a flashing 1 will appear.	
4	Increment the digit by tapping the left turn signal until the odometer window displays the first digit of the PIN.	The first digit in the odometer will be the first digit in the PIN.	
5	Press **right** turn switch **one time.**	The first digit is stored and the next digit will flash.	Serves as enter key.
6	Increment the second digit using the left turn switch until the digit reaches the second digit of the PIN.	The second digit in the odometer will be the second digit in the PIN.	
7	Press right turn switch 1 time.	The second digit is stored and the next dash will flash.	Serves as enter key.
8	Increment the third digit using the left turn switch until it reaches the third digit of the PIN.	The third digit in the odometer will be the third digit in the PIN.	

9	Press **right** turn switch **one time**.	The third digit is stored and the next dash will flash.	Serves as enter key.
10	Increment the fourth digit using the left turn switch until it reaches the fourth digit of the PIN.	The fourth digit in the odometer will be the fourth digit in the PIN.	
11	Press **right** turn switch **one time.**	The fourth digit is stored and the next dash will flash.	Serves as enter key.
12	Increment the fifth digit using the left turn switch until it reaches the fifth digit of the PIN.	The fifth digit in the odometer will be the fifth digit in the PIN.	
13	Press **right** turn switch **one time**.	The fifth digit is stored. The security system indicator lamp stops blinking.	Smart Security System is disarmed.

Activation

When the alarm system is activated:

- Turn signals alternately flash.
- Smart siren, if equipped, sounds.

After 30 seconds of alarm, if no further vehicle motion is detected, the alarm will stop.

NOTE

Vehicle must be returned to original parked position with ignition **OFF**.

If vehicle motion continues, the alarm will start again and continue for another 30 seconds.

The security system will repeat the alarm cycles 10 times for a total of 5 minutes, with a 10-second pause between alarm cycles.

During warnings and alarms, the starter motor and the ignition remain disabled.

Deactivation

Stop the alarm at any time by moving an assigned fob to the vehicle. The presence of the fob will terminate the alarm.

See **Figure 1**. The fob's reception range for the signal depends on a specific receiver pattern. The typical range will be an arm's length.

See **Figure 2**. Replace the fob battery every year.

NOTE

- Environmental and geographic conditions impact signal range.
- Always have the fob present whenever the vehicle is operated.
- Do not place fob in metal enclosure. Do not place it closer than 8 cm (3.0 in) to cellular phones, the hands-free antenna, displays and other electronic devices while operating the vehicle. That may prevent the fob from disarming the security system.

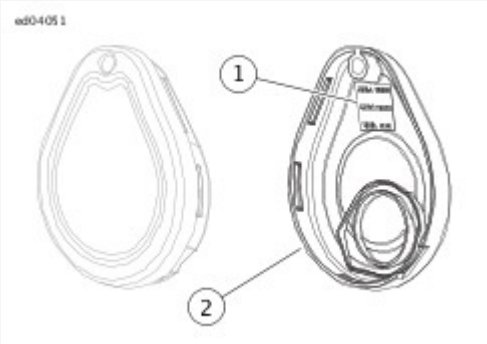

View interactive image

1	Fob serial number
2	Fob cover

Figure 1. Fob Serial Number

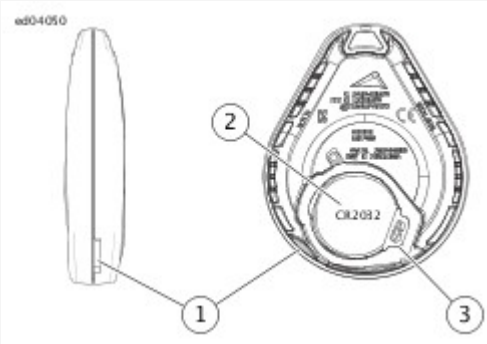

View interactive image

1	Thumbnail slot
2	Battery (CR2032)
3	Latch

Figure 2. Replace Fob Battery

Special Tools

Description	Part Number	Qty.
DIGITAL TECHNICIAN II	HD-48650	1

Use **DIGITAL TECHNICIAN II (Part Number:HD-48650)** to assign both fobs to the H-DSSS. Follow the menu prompts in the **DIGITAL TECHNICIAN II (Part Number:HD-48650)** display and scan the fob serial number with the bar code reader, or key-in the number from the keyboard.

NOTE

Each fob has a unique serial number. Attach fob label to a blank NOTES page in the owner's manual for reference.

See Figure 1 and Figure 2. If equipped, the siren is attached at [142]. Through this connector it shares the battery circuit, the ground circuit and the alarm signal circuit with the BCM. The siren adds an audible warning to the visual warnings that are a standard function of the security system.

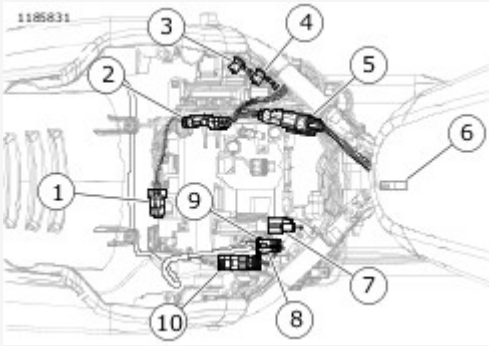

View interactive image

1	Purge solenoid [95]
2	Engine harness [145]
3	GND 1
4	GND 2
5	Backbone harness interconnect [327]
6	Engine harness interconnect [328]
7	Security antenna [209]
8	Left rear lighting [19]
9	Right rear lighting [18]
10	Tail lamp [40]

Figure 1. Under Seat

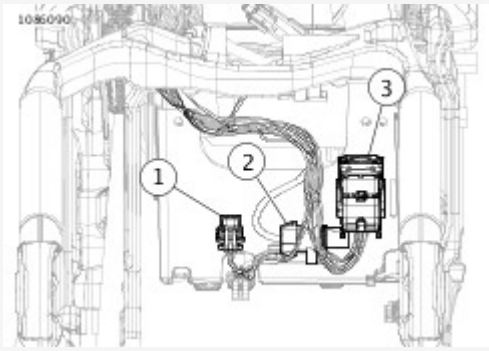

View interactive image

1	Security siren [142]
2	BCM power [259]
3	BCM [242]

Figure 2. Front of Rear Tire

Chirpless Mode

In the chirpless mode, the siren does not chirp on arming or disarming.

NOTE

When armed in the chirpless mode, the siren still chirps warnings on movement and will activate the alarm through the normal cycles.

Chirp Mode

On arming in the chirp mode, the siren responds with two chirps. When disarming, the siren responds with a single chirp.

Switching Modes

Cycling quickly through three armings and disarmings will switch chirp mode.

1. With the fob present, the IGN ON and the system disarmed, turn the IGN OFF.
2. When the security lamp turns off, immediately turn the IGN ON. If the turn signals flash twice before the IGN is turned ON, the system will drop out of the switching mode sequence and will have to be started over from the beginning.
3. Wait until the security lamp goes out, then immediately turn the IGN OFF.
4. When the security lamp turns off, immediately turn the IGN ON. If the turn signals flash twice before the IGN is turned ON, the system will drop out of the switching mode sequence and will have to be started over from the beginning.
5. Wait until the security lamp goes out, then immediately turn the IGN OFF.
6. When the security lamp turns off, immediately turn the IGN ON. If the turn signals flash twice before the IGN is turned ON, the system will drop out of the switching mode sequence and will have to be started over from the beginning.

Setting up a vehicle's security requires a BCM that is security equipped.

Actuation consists of assigning two fobs to the system and entering an initial PIN. The PIN can be changed by the owner at any time.

1. Configure vehicles by assigning **both** fobs to the vehicle.
2. Configure vehicles by entering a PIN picked by the owner. The personal code allows the owner to operate the system if the fob is lost or inoperable. Record the PIN in the owner's manual wallet card. Instruct the customer to always carry this card when riding the motorcycle.

Once the system has been activated, it will always arm within 5 seconds of turning the ignition switch to **OFF** or **ACC** and no vehicle motion.

The PIN consists of five digits. Each digit can be any number from 1-9. There can be no zeros (0) in the PIN. The PIN **must** be used to disarm the security system in case the fob becomes unavailable.

Special Tools

Description	Part Number	Qty.
DIGITAL TECHNICIAN II	HD-48650	1

The initial PIN entry should be performed using **DIGITAL TECHNICIAN II (Part Number:HD-48650)** in conjunction with fob assignment.

To change a PIN, refer to Table 1.

If a PIN was previously entered, the odometer will display the equivalent digit. To increment the digits, press the left turn signal switch. The first press selects the same value and then each additional press of the left turn signal switch will increment the digit by one.

Examples:

- To advance from 5 to 6, press and release the left turn switch twice.
- To advance from 8 to 2, press and release the left turn switch four times.

Table 1. Changing the PIN

STEP NO.	ACTION	WAIT FOR CONFIRMATION	NOTES
1	Select a 5-digit (1 thru 9) PIN and record on the wallet card from owner's manual.		
2	With an assigned fob present, turn the engine stop switch to **OFF**.		
3	Cycle the OFF/RUN switch twice: **RUN - OFF - RUN - OFF - RUN**.		
4	Press **left** turn signal switch **two times**.	ENTER PIN will scroll through the odometer window.	
5	Press **right** turn signal switch **one time** and release.	Turn signals will flash three times. Current PIN will appear in odometer. The first digit will be flashing.	
6	Enter first digit of new PIN by pressing and releasing the **left** turn signal switch until the selected digit appears.		
7	Press **right** turn signal switch **one time** and release.	The new digit will replace the current in odometer window.	
8	Enter second digit of selected PIN by pressing and releasing the **left** turn signal switch until the selected digit is present.		
9	Press **right** turn signal switch **one time** and release.	The new digit will replace the current in odometer window.	
10	Enter third digit of the selected PIN by pressing and releasing the **left** turn signal switch until the selected digit is present.		
11	Press **right** turn switch **one time** and release.	The new digit will replace the current in odometer window.	
12	Enter fourth digit of new PIN by pressing and releasing the **left** turn signal switch until the selected digit is present.		
13	Press **right** turn switch **one time** and release.	The new digit will replace the current in odometer window.	

14	Enter fifth digit of the new PIN by pressing and releasing the **left** turn signal switch until the selected digit is present.		
15	Press **right** turn switch **one time** and release.	The new digit will replace the current in odometer window.	
16	Turn the engine stop switch **OFF**.		Pushing the engine stop switch to **OFF** stores the new PIN in the module.

Put the system in transport mode to transport the motorcycle. Otherwise, the alarm activated by motion detection can discharge the battery.

In the transport mode, the security system is armed without enabling the motion detector for one ignition cycle. This allows the vehicle to be picked up and moved in an armed state. Any attempt to start the engine when the fob is not within range will trigger the alarm.

To Enter Transport Mode

1. With an assigned fob within range, turn the ignition ON.
2. Before the security system lamp goes out, turn the ignition OFF.
3. Within 3 seconds, simultaneously press both the left and the right turn signal switches.
4. After the turn signals flash once, the system enters the transport mode. With the fob removed, the motorcycle can be moved without setting off the alarm.

To Exit Transport Mode

With the fob present, turn the ignition ON to disarm the system.

Special Tools

Description	Part Number	Qty.
DIGITAL TECHNICIAN II	HD-48650	1

With a fob present, the security system can be configured for service by disabling the security system with **DIGITAL TECHNICIAN II (Part Number:HD-48650)**.

Once disabled, the vehicle can be operated without an assigned fob present. To maintain the service mode, the assigned fobs must be kept out of range. If the fob appears in range, the service mode is cancelled.

To Arm the Security System with the Hazard Warning Flashers ON

If it is necessary to leave a vehicle parked on the side the road, the hazard warning four-way flashers can be turned ON with the smart security system armed.

1. With a fob present, turn IGN ON or ACC.
2. Press the hazard warning switch. The four-way flashers will continue for two hours.
3. Turn IGN OFF to arm the smart security system.

To Disarm the Security System and Turn the Hazard Warning Flashers OFF

1. With a fob present, turn IGN to ON or ACC.
2. Press the hazard warning switch.

NOTE

This section applies only to those vehicles equipped with the optional security system.

See Figure 1 and Figure 2. An alarm cycle is activated when the BCM is connected, the siren has been armed by the BCM and a security event occurs. See Accessories, Horn, Lighting and Security → SECURITY SYSTEM. Under normal armed operation, the siren input (terminal 2) is driven low by the BCM to trigger the audible alarm. When the siren input is driven high by the BCM the audible alarm stops.

Table 1. Code Description

DTC	DESCRIPTION
B2172	H2 output shorted high
B2173	H2 output shorted low

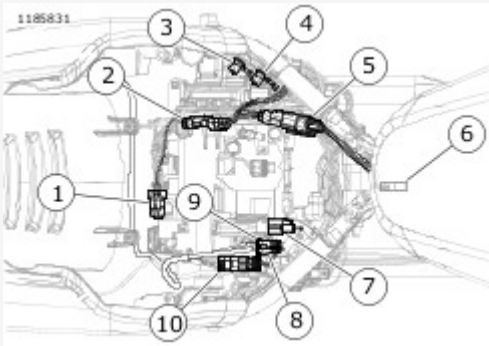

View interactive image

1	Purge solenoid [95]
2	Engine harness [145]
3	GND 1
4	GND 2
5	Backbone harness interconnect [327]
6	Engine harness interconnect [328]
7	Security antenna [209]
8	Left rear lighting [19]
9	Right rear lighting [18]
10	Tail lamp [40]

Figure 1. Under Seat

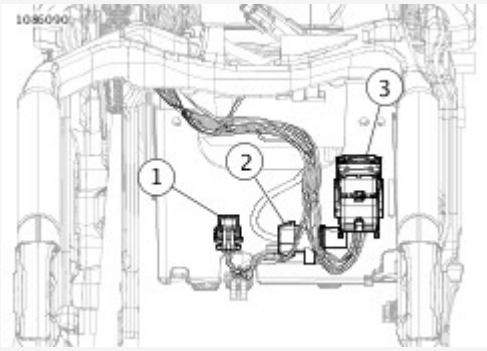

View interactive image

1	Security siren [142]
2	BCM power [259]
3	BCM [242]

Figure 2. Front of Rear Tire

Diagnostic Tips

- If the siren is armed and the internal siren battery is dead, shorted, disconnected or has been charging for a period longer than 24 hours, the siren will respond with three chirps on arming instead of two.
- The internal siren battery may not charge if the vehicle's battery is less than 12.5V.
- If the siren does not chirp two or three times on a valid arming command from the BCM, the chirp function has been disabled, the siren is either not connected, not working or the siren wiring was opened or shorted while the siren was disarmed.
- If the siren enters the self-driven mode where it is powered from the siren internal 9V battery, the turn-signal lamps will not alternately flash. If the BCM activates the siren, the turn-signal lamps will flash. If the siren has been armed and a security event occurs, and the siren is in self-driven mode, the siren will alarm for 20-30 seconds and then turn off for 5-10 seconds. This alarm cycle will be repeated ten times if the siren is in the self-driven mode.
- If the siren does not stop alarming after it has been armed, then either the BCM output or siren input may be shorted to ground, the siren vehicle battery connection is open or the siren vehicle ground connection is open or a security event has occurred. See **Accessories, Horn, Lighting and Security → SECURITY SYSTEM** for a description of alarm functions.

Connector Information

For additional information about the connectors in the following diagram(s) and diagnostic procedure(s), see **Wiring → Wire Harness Connectors → General**.

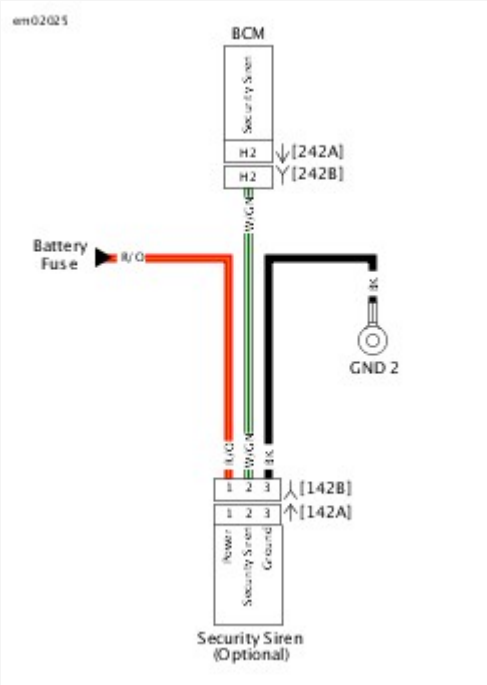

View interactive image

Figure 3. Smart Siren Circuit

Special Tools

Description	Part Number	Qty.
TEST CONNECTOR KIT	HD-41404	1

Table 1. DTC B2172 Diagnostic Faults

POSSIBLE CAUSES
Short to voltage in alarm signal
Siren malfunction

1. Siren Circuit Short to Voltage Test

1. Disconnect siren [142] (if equipped).
2. Using **TEST CONNECTOR KIT (Part Number:HD-41404)**, test voltage between [142B] terminal 2 and ground.
3. Is battery voltage present?

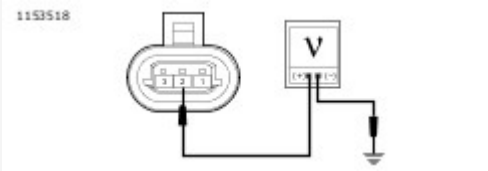

View interactive image

Figure 1.

   a. **Yes.** Repair short to voltage in (W/GN) wire.
   b. **No.** **Go to Test 2.**

2. DTC Test

1. Clear DTCs.
2. Turn IGN OFF. Verify security activates.
3. Check DTCs.
4. Did DTC reset?
   a. **Yes.** Replace BCM.
   b. **No.** Replace siren.

Special Tools

Description	Part Number	Qty.
TEST CONNECTOR KIT	HD-41404	1
BREAKOUT BOX	HD-50390-1	1
BCM CABLE	HD-50390-2	1
BCM OVERLAY	HD-50390-2-P	1

Table 1. DTC B2173 Diagnostic Faults

POSSIBLE CAUSES
Short to ground in alarm signal
Open ground circuit
Open alarm signal
Siren malfunction

1. Siren Signal Short to Ground Test

1. Disconnect security siren [142] (if equipped).
2. Turn IGN OFF.
3. Connect **BREAKOUT BOX (Part Number:HD-50390-1)** and **BCM CABLE (Part Number:HD-50390-2)** to wire harness [242B], leaving [242A] disconnected. See **Initial Diagnostics → DIAGNOSTIC TOOLS**.
4. Verify **BCM OVERLAY (Part Number:HD-50390-2-P)** is in position on BOB.
5. Using **TEST CONNECTOR KIT (Part Number:HD-41404)**, test continuity between BOB terminal H2 and ground.
6. Is continuity present?

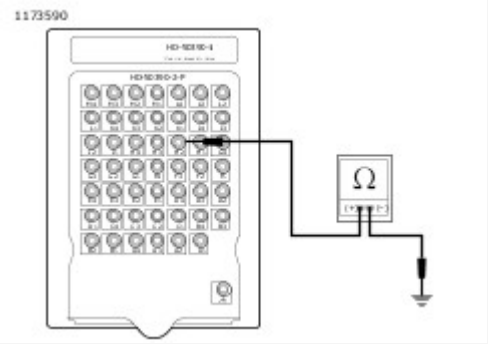

View interactive image

Figure 1.

a. **Yes.** Repair short to ground in (W/GN) wire between [142B] and [242B].
b. **No.** **Go to Test 2.**

2. DTC Test

1. Connect [242].
2. Clear DTCs.
3. Turn IGN ON.
4. Check DTCs.
5. Did DTC reset?
    a. **Yes.** Replace BCM.
    b. **No.** Replace security siren.

See Figure 1 (all other models similar). DTC B2176, B2177 or B2178 will set when a fault occurs to the security antenna circuit used to transmit to the fob. Refer to Table 1.

If the security system does not respond, responds with limited range or will not consistently disarm with fob within normal range, follow the fails to disarm diagnostic procedure.

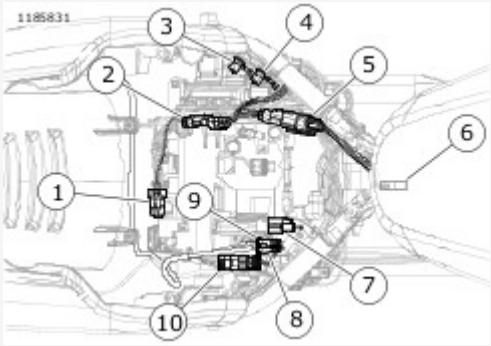

View interactive image

1	Purge solenoid [95]
2	Engine harness [145]
3	GND 1
4	GND 2
5	Backbone harness interconnect [327]
6	Engine harness interconnect [328]
7	Security antenna [209]
8	Left rear lighting [19]
9	Right rear lighting [18]
10	Tail lamp [40]

Figure 1. Under Seat

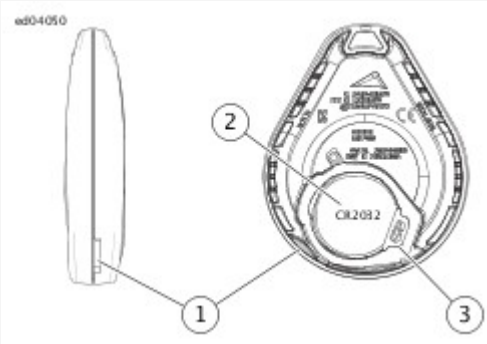

View interactive image

1	Thumbnail slot
2	Battery (CR2032)
3	Latch

Figure 2. Replace Fob Battery

Table 1. Code Description

DTC	DESCRIPTION
B2176	Security antenna output open
B2177	Security antenna output shorted high
B2178	Security antenna output shorted low

Conditions for Setting

The BCM will recognize the faults with IGN ON.

Diagnostic Tips

- Verify that cell phone is not within 80 mm (3.0 in) of key fob.
- Interference from physical surroundings impacts RF transmission. Place fob next to vehicle or move vehicle to a new location and retest.
- See Figure 1. Verify that antenna is in OE location. Make sure that seat has not been replaced with a metal base seat.
- Check for damage to antenna wire.
- See Figure 2. Verify fob battery voltage is at least 2.9V.
- Fob serial number is located inside fob. Twist thin blade in thumbnail slot to open.

Connector Information

For additional information about the connectors in the following diagram(s) and diagnostic procedure(s), see Wiring → Wire Harness Connectors → General.

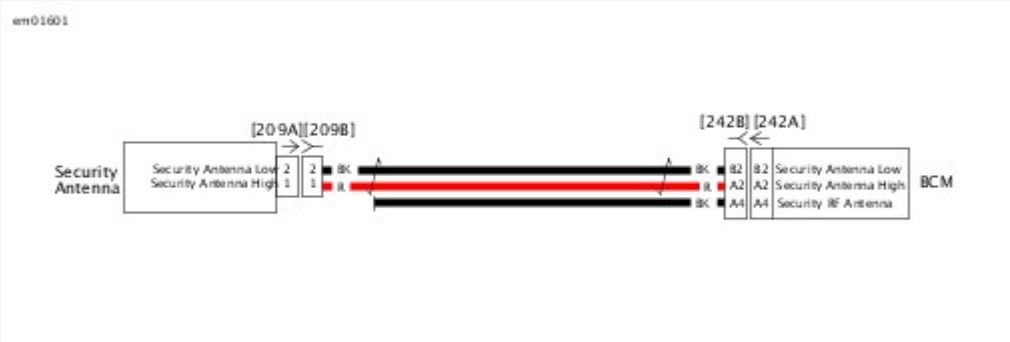

View interactive image

Figure 3. Antenna Circuit

Special Tools

Description	Part Number	Qty.
TEST CONNECTOR KIT	HD-41404	1
BREAKOUT BOX	HD-50390-1	1
BCM CABLE	HD-50390-2	1
BCM OVERLAY	HD-50390-2-P	1

Table 1. DTC B2176 Diagnostic Faults

POSSIBLE CAUSES
Security antenna malfunction
Open antenna circuit

NOTE

Always inspect connectors for backed out terminals, improper mating, inoperative locks, improperly formed or damaged terminals, poor terminal-to-wire connection and damaged harnesses when disconnecting any connector.

1. Fob Test

1. Turn IGN OFF.
2. With fob present, turn IGN ON.
3. Does odometer read ENTER PIN?
    a. **Yes.** Go to Test 2.
    b. **No.** Go to Test 6.

2. Security Antenna Visual Test

1. Inspect security antenna for damage.
2. Is security antenna damaged?
    a. **Yes.** Repair or replace security antenna as needed.
    b. **No.** Go to Test 3.

3. Visual Water Test

1. Turn IGN OFF.
2. Disconnect antenna [209].
3. Inspect for water or contamination.
4. Is water or contamination present?
    a. **Yes.** Replace antenna.
    b. **No.** Go to Test 4.

4. Security Antenna Resistance Test

1. Using TEST CONNECTOR KIT (Part Number:HD-41404), test resistance between [209A] terminals 1 and 2.
2. Is resistance greater than 5700 ohms?

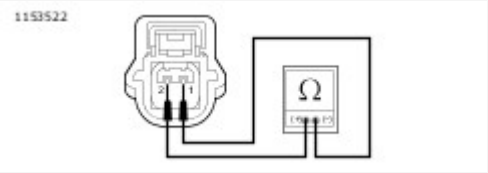

View interactive image

Figure 1.

a. **Yes.** Replace security antenna.
b. **No.** Go to Test 5.

5. Antenna B Circuit Open Test

1. Connect BREAKOUT BOX (Part Number:HD-50390-1) and BCM CABLE (Part Number:HD-50390-2) to wire harness [242B], leaving [242A] disconnected. See Initial Diagnostics → DIAGNOSTIC TOOLS.
2. Verify BCM OVERLAY (Part Number:HD-50390-2-P) is in position on BOB.
3. Test resistance between BOB terminal B2 and [209B] terminal 2.
4. Is resistance less than 0.5 ohm?

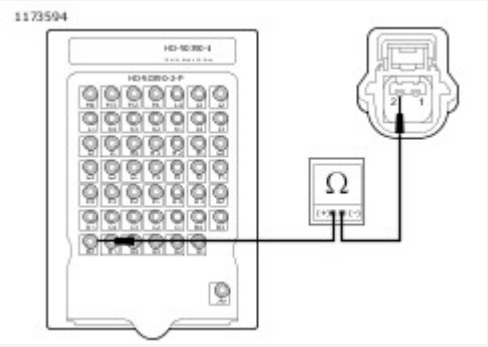

View interactive image

Figure 2.

a. **Yes.** Go to Test 6.
b. **No.** Repair open in (BK) wire.

6. Antenna A Circuit Open Test

1. Test resistance between BOB terminal A2 and [209B] terminal 1.
2. Is resistance less than 0.5 ohm?

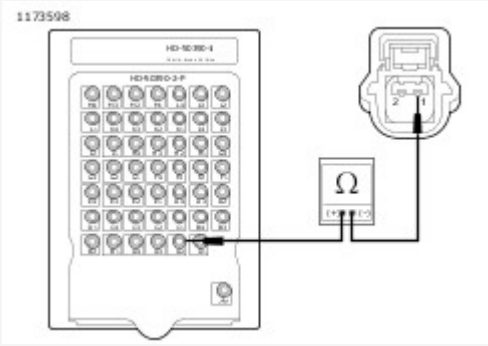

View interactive image

Figure 3.

a. **Yes.** [Go to Test 7.](#)
b. **No.** Repair open in (R) wire.

7. DTC Test

1. Connect [242] and [209] (if needed).
2. Clear DTCs.
3. Turn IGN ON.
4. Check DTCs.
5. Did DTC reset?
   a. **Yes.** Replace BCM.
   b. **No.** Concern is intermittent. See Initial Diagnostics → DIAGNOSTICS AND TROUBLESHOOTING → Wiggle Test.

Special Tools

Description	Part Number	Qty.
TEST CONNECTOR KIT	HD-41404	1
BREAKOUT BOX	HD-50390-1	1
BCM CABLE	HD-50390-2	1
BCM OVERLAY	HD-50390-2-P	1

Table 1. DTC B2177 Diagnostic Faults

POSSIBLE CAUSES
Security antenna malfunction
Short to voltage in antenna circuit

NOTE

Always inspect connectors for backed out terminals, improper mating, inoperative locks, improperly formed or damaged terminals, poor terminal-to-wire connection and damaged harnesses when disconnecting any connector.

1. Security Antenna Visual Test

1. Inspect security antenna for damage.
2. Is security antenna damaged?
    a. **Yes.** Repair or replace security antenna as needed.
    b. **No.** Go to Test 2.

2. Visual Water Test

1. Turn IGN OFF.
2. Disconnect antenna [209].
3. Inspect for water or contamination.
4. Is water or contamination present?
    a. **Yes.** Replace antenna.
    b. **No.** Connect [209]. Go to Test 3.

3. Security Antenna High Circuit Short to Voltage Test

1. Connect BREAKOUT BOX (Part Number:HD-50390-1) and BCM CABLE (Part Number:HD-50390-2) between wire harness [242B] and [242A]. See Initial Diagnostics → DIAGNOSTIC TOOLS.
2. Verify BCM OVERLAY (Part Number:HD-50390-2-P) is in position on BOB.
3. Turn IGN ON.
4. Using TEST CONNECTOR KIT (Part Number:HD-41404), test voltage between BOB terminal A2 and ground.

5. Is voltage greater than 0.6V?

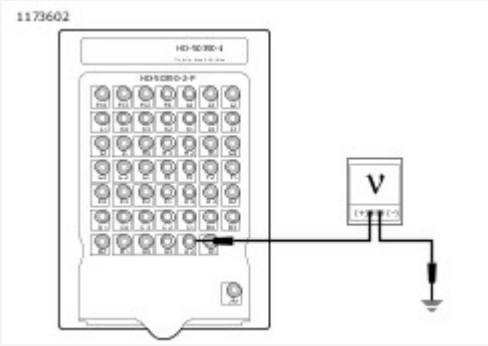

View interactive image

Figure 1.

a. **Yes.** Repair short to voltage in (R) wire.
b. **No.** Go to Test 4.

4. Security Antenna Low Circuit Short to Voltage Test

1. Test voltage between BOB terminal B2 and ground.
2. Is voltage greater than 0.6V?

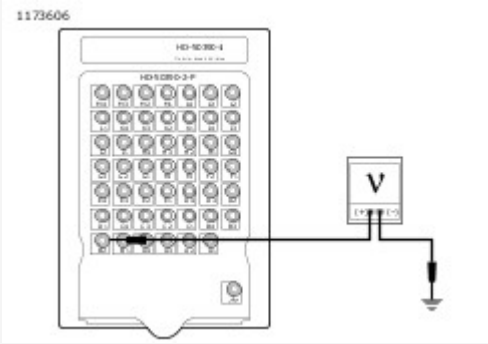

View interactive image

Figure 2.

a. **Yes.** Repair short to voltage on (BK) wire.
b. **No.** Go to Test 5.

5. DTC Test

1. Clear DTCs.
2. Turn IGN ON.
3. Check DTCs.
4. Did DTC reset?
   a. **Yes.** Replace BCM.
   b. **No.** Concern is intermittent. See Initial Diagnostics → DIAGNOSTICS AND TROUBLESHOOTING → Wiggle Test.

Special Tools

Description	Part Number	Qty.
TEST CONNECTOR KIT	HD-41404	1

Table 1. DTC B2178 Diagnostic Faults

POSSIBLE CAUSES
Security antenna malfunction
Open antenna circuit

NOTE

Always inspect connectors for backed out terminals, improper mating, inoperative locks, improperly formed or damaged terminals, poor terminal-to-wire connection and damaged harnesses when disconnecting any connector.

1. Security Antenna Visual Test

1. Inspect security antenna for damage.
2. Is security antenna damaged?
   a. **Yes.** Repair or replace security antenna as needed.
   b. **No.** Go to Test 2.

2. Visual Water Test

1. Turn IGN OFF.
2. Disconnect antenna [209].
3. Inspect for water or contamination.
4. Is water or contamination present?
   a. **Yes.** Replace antenna.
   b. **No.** Go to Test 3.

3. Security Antenna High Circuit Short to Ground Test

1. Disconnect BCM [242].
2. Using TEST CONNECTOR KIT (Part Number:HD-41404), test continuity between [209B] terminal 1 and ground.
3. Is continuity present?

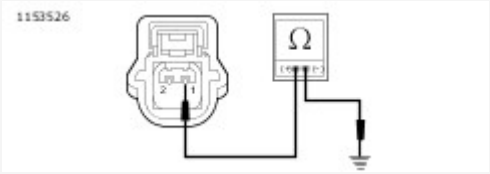

View interactive image

View interactive image

Figure 1.

a. **Yes.** Repair short to ground in (R) wire.
b. **No.** Go to Test 4.

4. Security Antenna Low Circuit Short to Ground Test

1. Test continuity between [209B] terminal 2 and ground.
2. Is continuity present?

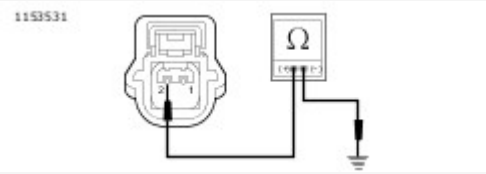

View interactive image

Figure 2.

a. **Yes.** Repair short to ground in (BK) wire.
b. **No.** Go to Test 5.

5. DTC Test

1. Connect BCM [242] and [209].
2. Clear DTC.
3. Turn IGN ON.
4. Did DTC reset?
   a. **Yes.** Replace BCM.
   b. **No.** Concern is intermittent. See Initial Diagnostics → DIAGNOSTICS AND TROUBLESHOOTING → Wiggle Test.

Special Tools

Description	Part Number	Qty.
TEST CONNECTOR KIT	HD-41404	1
DIGITAL TECHNICIAN II	HD-48650	1
BREAKOUT BOX	HD-50390-1	1
BCM CABLE	HD-50390-2	1
BCM OVERLAY	HD-50390-2-P	1

Table 1. Fails to Disarm Diagnostic Faults

POSSIBLE CAUSES
Open antenna circuit
Short to ground in antenna circuit
RF interference
Antenna malfunction
Fob malfunction or dead battery

1. Battery Test

1. Check fob battery voltage.
2. Is battery voltage greater than 2.9V?
    a. **Yes.** Go to Test 2.
    b. **No.** Replace battery.

2. Interference Test

1. Move vehicle away from any possible interference sources.
2. Place fob on seat.
3. Will security system disarm?
    a. **Yes.** Inspect for electrical accessories or an aftermarket seat that may be causing interference.
    b. **No.** Go to Test 3.

3. Antenna Connection Test

1. Inspect antenna location and connection.
2. Is antenna properly located and connected?
    a. **Yes.** Go to Test 4.
    b. **No.** Repair connection.

4. Antenna Circuit Short to Ground Test

1. Turn IGN OFF.
2. Connect **BREAKOUT BOX (Part Number:HD-50390-1)** and **BCM CABLE (Part Number:HD-50390-2)** to wire harness [242B], leaving BCM [242A] disconnected. See **Initial Diagnostics → DIAGNOSTIC TOOLS**.
3. Verify **BCM OVERLAY (Part Number:HD-50390-2-P)** is in position on BOB.
4. Using **TEST CONNECTOR KIT (Part Number:HD-41404)**, test continuity between BOB terminal A4 and ground.
5. Is continuity present?

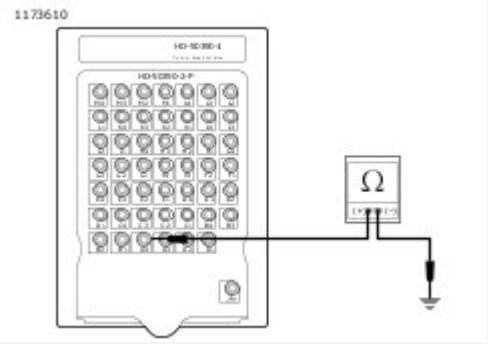

View interactive image

Figure 1.

a. **Yes.** Repair short to ground.
b. **No.** **Go to Test 5.**

5. Antenna Circuits Shorted Together Test

1. Disconnect security antenna [209].
2. Test continuity between BOB terminals A2 and B2.
3. Is continuity present?

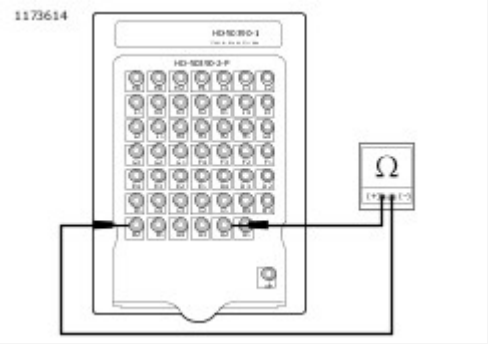

View interactive image

Figure 2.

a. **Yes.** Repair short between antenna circuits.
b. **No.** **Go to Test 6.**

6. Antenna Circuit Open Test

1. Test resistance between BOB terminal A4 and end of (BK) wire. Pull back conduit to expose unterminated end of wire.
2. Is resistance less than 0.5 ohm?
    a. **Yes.** Go to Test 7.
    b. **No.** Repair open on (BK) wire.

7. Security System Antenna Test

1. Replace security antenna with a known good security antenna.
2. Does security system now disarm?
    a. **Yes.** Replace security antenna.
    b. **No.** Go to Test 8.

8. Non-Functional Fob Test

1. Replace non-functional fob with a known good fob.
2. Using DIGITAL TECHNICIAN II (Part Number:HD-48650), program known good fob to BCM.
3. Turn IGN ON.
4. Push TEST button on DT unit.
5. Did DT unit see fob?
    a. **Yes.** Replace original fob.
    b. **No.** Verify fob serial number is correct. If so, replace BCM.

These outputs are intended for future applications and are not used for this model.

Table 1. Code Description

DTC	DESCRIPTION
B2183	ABS wake shorted low
B2188	G3 output shorted low
B2193	H4 output shorted low
B2198	H3 output shorted low

Conditions for Setting

This output is shorted to ground in one of three areas:

- Wire harness.
- Device the output is connected to.
- BCM.

Diagnostic Tips

This circuit may be used for aftermarket accessories or systems. If a code is set and cannot be duplicated, check for aftermarket devices.

Connector Information

For additional information about the connectors in the following diagram(s) and diagnostic procedure(s), see [Wiring → Wire Harness Connectors → General].

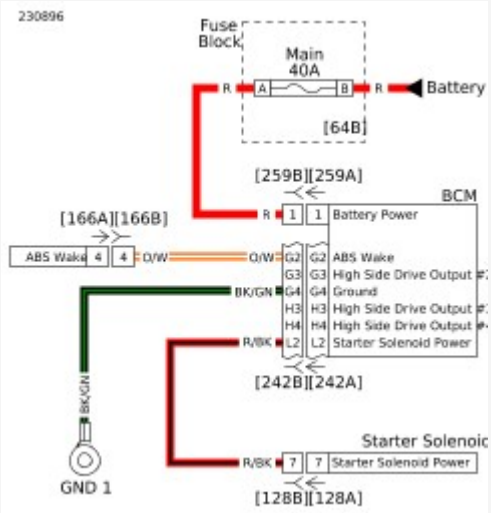

View interactive image

Figure 1. Spare Outputs

Special Tools

Description	Part Number	Qty.
TEST CONNECTOR KIT	HD-41404	1
BREAKOUT BOX	HD-50390-1	1
BCM CABLE	HD-50390-2	1
BCM OVERLAY	HD-50390-2-P	1

Table 1. DTC B2183 Diagnostic Faults

POSSIBLE CAUSES
Short to ground in ABS wake circuit

1. ABS Test

1. Disconnect ABS [166].
2. Check DTCs.
3. Did DTC change to historic code?
    a. **Yes.** Replace ABS module.
    b. **No.** Go to Test 2.

2. ABS Wake Circuit Test

1. Turn IGN OFF.
2. Connect BREAKOUT BOX (Part Number:HD-50390-1) and BCM CABLE (Part Number:HD-50390-2) to wire harness [242B], leaving [242A] disconnected.
3. Verify BCM OVERLAY (Part Number:HD-50390-2-P) is in position on BOB.
4. Using TEST CONNECTOR KIT (Part Number:HD-41404), test continuity between BOB terminal G2 and ground.
5. Is continuity present?

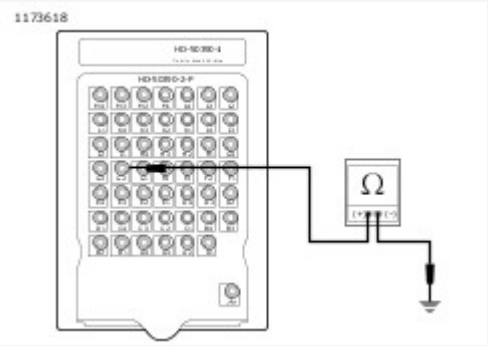

View interactive image

Figure 1.

a. **Yes.** Repair short to ground in (O/W) wire.

b. **No.** Replace BCM.

Table 1. DTC B2183, B2188, B2193, B2198 Diagnostic Faults

POSSIBLE CAUSES
Short to ground in spare output circuit

1. Circuit Inspection Test

1. Visually inspect BCM [242].
2. Are there wires plugged into any of the spare output terminals?
    a. **Yes.** Problem may be caused by aftermarket devices. See aftermarket manufacturer for repair.
    b. **No.** Go to Test 2.

2. DTC Test

1. Clear DTCs.
2. Turn IGN ON.
3. Check DTCs.
4. Did DTC reset?
    a. **Yes.** Replace BCM.
    b. **No.** Concern is intermittent.

See Figure 1. The BCM monitors the clutch and neutral switch circuits to determine whether or not to let the vehicle start. No power will be supplied to the starter solenoid unless either:

- Clutch switch is closed (lever pulled in).
- Neutral switch is closed (shifted to neutral).

Table 1. Code Description

DTC	DESCRIPTION
B2218	Neutral switch shorted low

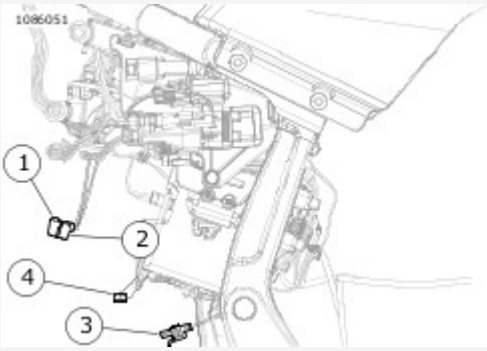

View interactive image

1	Neutral [131-1]
2	Neutral [131-2]
3	VSS [65]
4	Transmission GND

Figure 1. Above Transmission

Conditions for Setting

DTC B2218 will set when the neutral switch circuit is shorted low at speeds greater than 8 km/h (5 mph) for more than 60 seconds.

Connector Information

For additional information about the connectors in the following diagram(s) and diagnostic procedure(s), see Wiring → Wire Harness Connectors → General.

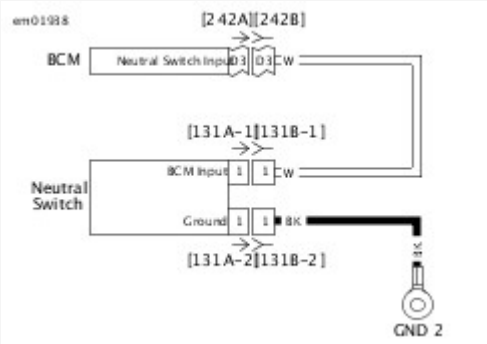

View interactive image

Figure 2. Neutral Switch Circuit

Special Tools

Description	Part Number	Qty.
TEST CONNECTOR KIT	HD-41404	1
BREAKOUT BOX	HD-50390-1	1
BCM CABLE	HD-50390-2	1
BCM OVERLAY	HD-50390-2-P	1

Table 1. DTC B2218 Diagnostic Faults

POSSIBLE CAUSES
Short to ground in neutral circuit
Neutral switch malfunction

NOTE

This DTC may occur if the vehicle is ridden in neutral at speeds greater than 8 km/h (5 mph) for more than 60 seconds. For example, if coasting down a long mountain road with the transmission in neutral.

1. Neutral Circuit Short to Ground Test

1. Shift transmission into 1st or 2nd gear.
2. Turn IGN ON.
3. Is neutral indicator illuminated?
    a. **Yes.** Go to Test 2.
    b. **No.** Verify neutral switch torque.

2. Neutral Switch Test

1. Disconnect neutral switch [131-1].
2. Is neutral lamp illuminated?
    a. **Yes.** Go to Test 3.
    b. **No.** Replace neutral switch.

3. Neutral Switch Short to Ground Test

1. Turn IGN OFF.
2. Connect BREAKOUT BOX (Part Number:HD-50390-1) and BCM CABLE (Part Number:HD-50390-2) to wire harness [242B], leaving [242A] disconnected. See Initial Diagnostics → DIAGNOSTIC TOOLS.
3. Verify BCM OVERLAY (Part Number:HD-50390-2-P) is in position on BOB.
4. Using TEST CONNECTOR KIT (Part Number:HD-41404), test resistance between BOB terminal D3 and ground.
5. Is resistance less than 10 ohms?

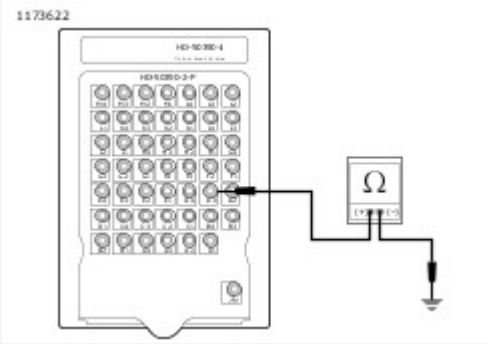

View interactive image

Figure 1.

a. **Yes.** Repair short to ground on (W) wire.
b. **No.** [Go to Test 4.](#)

4. DTC Test

1. Connect BCM [242] and neutral switch.
2. Clear DTC.
3. Turn IGN ON.
4. Operate vehicle above 8 km/h (5 mph) for at least two minutes.
5. Did DTC reset?
   a. **Yes.** Replace BCM.
   b. **No.** Concern is intermittent. See **Initial Diagnostics → DIAGNOSTICS AND TROUBLESHOOTING → Wiggle Test**.

The engine management system consists of the following components:

- ECM
- CKP sensor
- TMAP sensor
- ET sensor
- TGS
- TCA
- VSS
- Knock sensors
- HO2S
- Ignition coil
- Fuel pump
- Fuel injector
- Purge solenoid (if equipped)

The ECM is a solid state device mounted under the seat and sealed to prevent contamination from dust/dirt, water and oil. The ECM controls engine performance based upon input supplied to the ECM from the ET, CKP, TMAP, TGS, HO2S and the VSS sensors and other additional low-voltage circuits and components between the battery and ignition coil.

- The ECM controls the dwell time for the ignition coil, providing optimum ignition circuit performance for all engine speeds/load conditions. Optimizing the ignition system allows the ECM to control/vary engine timing (as needed) from 0-50 degrees BTDC.
- The ECM is a non-repairable item and must be replaced when it fails.

The CKP sensor is located in the front left side of the crankcase. The CKP generates an AC signal that is sent to the ECM where it is used to reference engine position (TDC) and speed. It functions by taking readings off the 30 teeth on the left side flywheel (two teeth are missing to establish a reference point).

The TMAP sensor is a dual-purpose sensor, mounted in the top of the intake manifold. One portion is used to measure temperature and the other portion is used to measure the air pressure inside the intake manifold. The temperature part of the TMAP contains a thermistor element, used to measure the temperature of the air entering the intake manifold. The MAP portion of this sensor is used to measure the difference between atmospheric pressure and vacuum pressure, within the intake manifold. The ECM processes information from the TMAP (and other sensors) to adjust ignition timing and fuel to achieve optimum engine performance.

The ET sensor contains a thermistor element that varies the sensor's internal electrical resistance. As the engine temperature changes the resistance in the ET sensor changes. The ECM monitors this resistance to compensate for various operating conditions.

The TGS, mounted on the right hand side of the handlebar, houses two internal (opposing) Hall-effect sensors for operator control of the engine's throttle. The opposing operation of the sensors ensures that repositioning of the throttle twist grip, forward and/or back, is accurately reported to the ECM. As the throttle is operated, position changes are reported to the ECM which controls the corresponding movement of the throttle plate by the TCA.

The TCA, mounted to the intake manifold, operates the throttle plate internal to the induction module on the engine. Two corresponding TP sensors receive input from the ECM, corresponding to the position of the TGS, to adjust the position of the throttle plate, accordingly. The ECM incorporates an H-Bridge and WatchDog microprocessor, used to control inadvertent or unexpected operations/conditions of the TCA and TGS.

The VSS is mounted in the transmission, beneath the starter motor. The VSS is a Hall-effect sensor, used to monitor and report vehicle speed based upon a reference point on the 5th gear of the transmission. A 5V reference signal and common ground circuitry are provided to the VSS, from the ECM. The VSS communicates electrical pulses to the ECM, where vehicle speed is calculated and sent to the speedometer as a serial data message.

The knock sensor creates a voltage signal based on the vibrations caused by detonation. The ECM uses this signal to alter the ignition timing and prevent detonation.

There are two HO2S, one mounted in each of the two exhaust pipes, to monitor the exhaust gas air/fuel mixture ratio. Each HO2S samples the exhaust oxygen content and provides specific voltage to the ECM. The ECM continuously adjusts the air/fuel mixture to maintain an optimal air/fuel mixture. When properly mixed, the HO2S voltage(s) will measure approximately 0.45V, each when measuring across the sensor.

The ignition coils provide high voltage output to the spark plugs. Each ignition coil is made up of a primary winding where low voltage input creates a high voltage spike in the collapsible field of the secondary winding. The front and rear coils are fired independently (one cylinder at a time).

The fuel pump, mounted inside the fuel tank, is a submersible pump used to provide fuel to the fuel injectors. The fuel pump is powered by the BCM.

- When the IGN is ON, the BCM supplies voltage to the fuel pump.
- The fuel pump also runs when the start button is pressed for up to 10 seconds, as long as the ECM is receiving input from the CKP sensor. If no CKP pulses are received, the ECM sends a message to the BCM to turn off the fuel pump within 2 seconds after the ignition is turned on, the engine has stalled or immediately after the engine is shut off.
- The fuel pump contains a pressure regulator which maintains consistent fuel pressure to each of the fuel injectors. Excess fuel flow is bypassed into the fuel tank by the pressure regulator.

There are two fuel injectors mounted to the intake manifold. The ECM controls the injectors by actuating the injector solenoid enabling fuel to be metered through the injector and atomized into the intake manifold.

The injectors are timed to the combustion cycle and are triggered sequentially. When the ECM determines that fuel is required, the ECM supplies a short duration ground to the fuel injector, which opens and releases fuel into the air intake manifold.

The purge solenoid (working with the charcoal canister only used in certain destinations) allows the vapors to escape back into the throttle body. The purge solenoid is timed to the throttle position but is disabled at startup, low engine temperature, low engine speed or low vehicle speed. The power for the purge solenoid comes from the BCM. The ECM provides the path to ground to trigger the purge solenoid.

Engine Idle Temperature Management System

To improve rider comfort, an optional heat management system (EITMS) may be enabled. After being enabled, the heat management system improves rider comfort by turning off the rear cylinder fuel injector when all of the following conditions exist:

- High engine temperature.
- Engine at idle speed.
- Low or no vehicle speed.
- Clutch lever pulled in or transmission in neutral.

There is a four minute delay after startup before EITMS will engage. As the engine maintains idle speed, the rear cylinder functions as an "air pump," helping to cool the engine. This continues until one of the above listed conditions is no longer met, then the rear cylinder fires normally again.

NOTE

When the engine is in heat management mode, a noticeable difference in idle may be accompanied by a unique exhaust odor. While these conditions are normal, a rider or technician unaware of the heat management system may incorrectly assume an idle problem is present.

Enable/Disable EITMS

1. Turn the ignition ON. Push the engine OFF/RUN switch on the right handlebar to the RUN position (the motorcycle may be running or not running).
2. Verify cruise control is OFF.
3. Push the throttle to roll-off position and hold.
4. After approximately 3 seconds, the cruise indicator will flash either amber (disabled) or green (enabled).
5. Repeat the procedure as necessary to enable or disable.

NOTE

On platforms/models equipped with a radio, the status of the EITMS can be viewed on the information display.

See Figure 1. The ECM receives and processes signals from the sensors and applies output signals to the drivers to start, idle and run the engine. This section describes the configuration of the ECM.

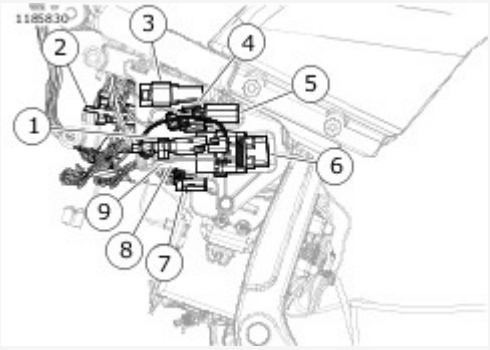

View interactive image

1	Battery tender [281]
2	DLC [91]
3	Termination resistor [319]
4	P&A accessory [325]
5	Fuse holder [332]
6	Fuse block [64]
7	ECM [78-3]
8	ECM [78-2]
9	ECM [78-1] (behind sub caddy)

Figure 1. Behind Left Side Cover

ECM

The ECM is mounted under the seat. It computes the spark advance for proper ignition timing and fuel control based on sensor inputs (from ET, CKP, TMAP, TGS, HO2S and VSS sensors) and controls the low-voltage circuits for the ignition coils and injectors.

The ECM contains all of the components used in the ignition system. The dwell time for the ignition coil is also calculated in the microprocessor and is dependent upon battery voltage. The programmed dwell is an added feature to give adequate spark at all speeds. The ECM is fully enclosed to protect it from vibration, dust, water or oil. This unit is a non-repairable item. If it fails, it must be replaced.

32-2 Flywheel

The left flywheel has positions for 32 teeth evenly spaced around its circumference with 30 teeth present and two consecutive teeth missing (sync gap). In this configuration, the ECM determines engine position, engine phase and engine speed from the CKP sensor input. Phase (TDC compression) is determined by the ECM during startup and, when necessary, while running. No engine ignition events can occur until the ECM determines the relationship of piston position to crankshaft position. The following paragraphs in this section describe synchronization and phasing by the ECM to provide smooth operation of the engine at all

speeds.

Crank Position Signal Synchronization

In the 32-2 crank configuration, crankshaft position is determined by the ECM finding the two-tooth (sync gap) in the CKP sensor signal. This is usually accomplished the first time the sync gap is encountered. The ECM monitors the CKP signal status every engine revolution. If the ECM determines synchronization is lost, it immediately terminates ignition events and synchronizes on the next occurrence of the sync gap.

Engine Phase

Phasing is accomplished by the ECM identifying a widening in the CKP signal caused by the deceleration of the crankshaft, as a piston approaches TDC on its compression stroke. Since the rear cylinder approaches TDC earlier than the front cylinder, engine phase can be readily discriminated. Phasing is normally accomplished on the first TDC cycle after engine synchronization. Once phased, the ECM can begin normal ignition events. If the ECM experiences a system reset or loss of synchronization while the engine is running it also loses phase.

When phase is lost one of the following occurs:

- If an engine-not-running (Crank Mode) rpm is detected, the ECM executes the normal start-up phasing process.
- If Engine Run Mode is detected, the ECM executes a running re-phase sequence.

The front cylinder is fired every engine revolution. The ECM monitors the power stroke after the fire event to determine if sufficient acceleration occurred to indicate the ECM fired on the compression stroke. When two valid power strokes are detected, the ECM locks phase and resumes normal ignition events.

Engine Run Mode

Many functions of the EFI system require an engine run mode determination. Engine run is determined by the level of engine rpm. Generally, the engine is considered to be running when engine rpm exceeds a minimum of 750 rpm.

Sensors and drivers play an important part in the ECM's ability to provide the proper operational parameters for engine efficiency, emissions control and fuel economy. When a failure occurs, a DTC is generated by, and stored in, the ECM. These codes help the technician diagnose engine trouble to the proper sensor or driver. See **Initial Diagnostics → Initial Diagnostics**.

Not all sensor problems cause an engine shutdown, but sensor failure can seriously degrade overall engine performance. A notable exception is the CKP sensor, which if faulty, completely disables engine operation. The following are brief explanations of sensor types and their functions within the EFI system.

Crank Position (CKP) Sensor

The CKP sensor, located on the left front of the lower crankcase half, is a variable reluctance sensor that generates AC voltage as the teeth on the flywheel pass by the sensor. The signal is routed to the ECM where it is used to determine crankshaft position, engine speed (rpm) and engine phase (TDC compression). Without the presence of the CKP signal, the ECM will not allow the ignition and fuel injection drivers to operate, and thus the engine will not run. The ECM uses crankshaft compression slow down events to determine engine phase. Therefore, the spark plugs must be installed when checking for spark.

Twist Grip Sensor (TGS)

The TGS, mounted on the right hand side of the handlebar, houses two internal (opposing) Hall-effect sensors for operator control of the engine's throttle. The opposing operation of the sensors ensures that repositioning of the throttle twist grip, forward and/or back, is accurately reported to the ECM. As the throttle is operated, position changes are reported to the ECM that controls the corresponding movement of the throttle plate by the TCA.

Throttle Control Actuator (TCA)

The TCA, mounted to the intake manifold, operates the throttle plate internal to the induction module on the engine. Two corresponding TP sensors provide input to the ECM, so the ECM may verify that plate position corresponds to TGS input (rider desired position of the plate) and to adjust the position of the throttle plate, accordingly.

Jiffy Stand Sensor (JSS): If Equipped

The JSS uses a Hall-effect device to monitor jiffy stand position. When the jiffy stand is fully retracted, the sensor picks up the presence of a metal tab mounted to the jiffy stand. When extended, the engine only starts and runs if the ECM receives a signal from the neutral switch indicating the transmission is in neutral, or a signal from the clutch switch indicating the clutch lever is pulled in. Otherwise, the engine stalls as the clutch lever is released with the transmission in gear.

Accelerometer

The accelerometer is within the BCM. The BCM will shut the engine down if the vehicle is tipped over and the odometer will display tip. Once the sensor is tripped, the motorcycle must be righted, the ignition turned off and then on again before the engine can be restarted. This is communicated across the CAN communication.

Clutch Switch

The clutch switch is part of the LHCM. There are two types of clutch switches, one type for mechanical (cable) operated clutches and one for hydraulic operated clutches. The switches function differently and are not interchangeable. The LHCM communicates the position of the clutch switch to the ECM and BCM over the CAN communication circuits.

NOTE

The clutch switches are not interchangeable. If swapped, it could cause DTCs or improper vehicle operation.

Neutral Switch

The BCM provides voltage to the neutral switch, which is open when the transmission is in gear. With the transmission in neutral,

the switch is closed, allowing current flow to ground. The BCM will not allow the engine to start unless the transmission is in neutral or the clutch lever is pulled in.

Engine Temperature (ET) Sensor

The ET sensor is a thermistor device, which means that at a specific temperature it has a specific resistance across its terminals. As this resistance varies, so does the voltage.

- At high temperatures, the resistance of the sensor is very low, which effectively lowers the signal voltage on ECM [78-2] terminal 8.
- At low temperatures, the resistance is very high, allowing the voltage to rise close to 5V.

Temperature Manifold Absolute Pressure (TMAP) Sensor

The TMAP sensor combines the MAP and IAT in a single component. The functions of each are described in the following paragraphs. During diagnostics the two parts of the TMAP are tested as separate units.

Manifold Absolute Pressure (MAP) Sensor

The MAP sensor is supplied 5V from the ECM and sends a signal back to ECM. This signal varies in accordance with engine vacuum, intake air temperature and atmospheric barometric pressure. The MAP sensor monitors the intake manifold pressure (vacuum) and sends the information to the ECM. The ECM then adjusts the spark and fuel timing advance curves for optimum performance. The output of the sensor can also be used to determine if the engine is rotating when a fault with the CKP sensor is present.

Intake Air Temperature (IAT) Sensor

The IAT sensor is a thermistor device. As such, it will have a specific resistance across its terminals at a specific temperature. As the temperature varies, the thermistor resistance varies, and so does the voltage on ECM [78-2] terminal 6.

- At high temperatures, the resistance of the sensor is very low, which effectively lowers the signal voltage on ECM [78-2] terminal 6.
- At low temperatures, the resistance is very high, allowing the voltage to rise close to 5V. The ECM monitors this voltage to compensate for various operating conditions.

Knock Sensor

The knock sensor is a piezoelectric sensor that contains a seismic mass, brass carrier, contact ring and a ceramic piezo element. The knock sensor creates a voltage signal based on the vibrations caused by detonation. The ECM uses this signal to alter the ignition timing and prevent detonation.

Engine Coolant Temperature (ECT) Sensor (If Equipped)

The ECT sensor is a thermistor device, which means that at a specific temperature it has a specific resistance across its terminals. As this resistance varies, so does the voltage.

- At high temperatures, the resistance of the sensor is very low, which effectively lowers the signal voltage to the ECM.
- At low temperatures, the resistance is very high, allowing the voltage to rise close to 5V. The ECM monitors this voltage to determine when to start the cooling fans.

Vehicle Speed Sensor (VSS)

The VSS is a Hall-effect device mounted close to the teeth of the 5th gear in the transmission. The output signal frequency varies with vehicle speed. The ECM processes the vehicle speed signal and transmits it via the serial data circuit to the speedometer to indicate vehicle speed.

HO2S: Front and Rear

The HO2S detects unburned oxygen in the engine exhaust. The output of the sensor is a voltage having a range of about 0-1.0V.

- The normal output is 0.5V which represents a balance between a lean (not enough fuel) and rich (too much fuel) air/fuel mixture.
- An output less than 0.5V represents a lean mixture; greater than 0.5V represents a rich mixture.
- The change in output level signals the ECM to modify the air/fuel ratio. The HO2S does not operate efficiently until the engine is at operating temperature. Always warm-up the vehicle prior to troubleshooting the HO2S. The heater elements on the HO2S helps bring the HO2S up to operating temperature quicker. Leaks in the exhaust system, leaky exhaust valves, misfires or any engine problem allowing unburned oxygen into the exhaust stream could create a DTC indicating a bad sensor. Look for problems related to an improper air/fuel mixture before replacing the sensor.

The ECM drivers are the output devices or system outputs of the EFI system. Drivers are provided ground by the ECM to pump, inject and ignite the air/fuel mixture in the engine and to activate relays.

Fuel Pump

The BCM provides battery voltage to the fuel pump which is inside the fuel tank.

Ignition Coils and Spark Plugs

The ignition coils create the energy to fire the spark plugs and ignite the air/fuel mixture in the cylinders. Advancing or retarding the spark is controlled by the ECM to suit load and speed conditions of the engine.

The BCM powers a separate ignition coil for each cylinder.

Fuel Injectors

The BCM provides battery power to the fuel injectors. The ECM provides the path to ground to trigger the injectors. The fuel injectors are pulse-width modulated solenoids for metering fuel into the intake tract. The pulse-width of the ground path to the injectors is varied by the ECM in response to inputs from the various sensors, thus varying the length of time the injector is open.

See Figure 1 , Figure 2 , Figure 3 , Figure 4 and Figure 5. The BCM supplies and monitors the 12V system power circuit from terminal L3 of the BCM to the following components:

- Ignition coil
- Front fuel injector
- Rear fuel injector
- Purge solenoid
- ECM
- Front HO2S
- Rear HO2S
- Front ACR
- Rear ACR

The system power circuit is energized when the ignition is turned on.

Table 1. Code Description

DTC	DESCRIPTION
B2102	System power output shorted high
B2103	System power output shorted low
B2104	System power output overloaded

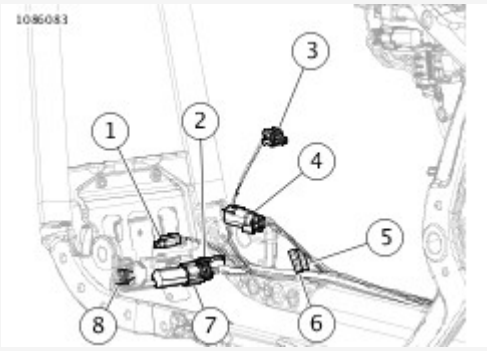

View interactive image

1	CKP [79]
2	Voltage regulator [77]
3	Oil pressure sensor [120]
4	Front HO2S [138]
5	Rear brake switch [121-1]
6	Rear brake switch [121-2]
7	JSS [133]
8	Stator [47]

Figure 1. Front of Engine: Typical

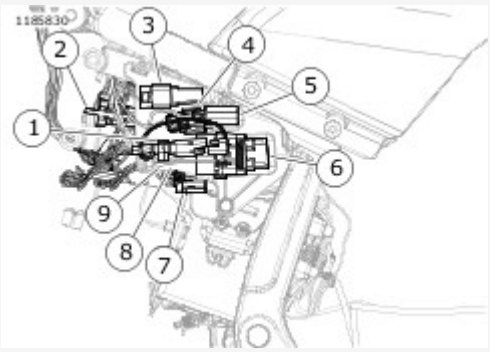

View interactive image

1	Battery tender [281]
2	DLC [91]
3	Termination resistor [319]
4	P&A accessory [325]
5	Fuse holder [332]
6	Fuse block [64]
7	ECM [78-3]
8	ECM [78-2]
9	ECM [78-1] (behind sub caddy)

Figure 2. Behind Left Side Cover

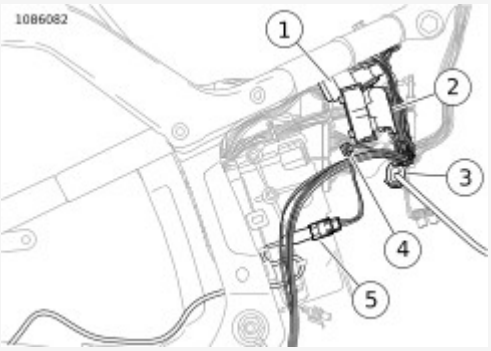

View interactive image

1	Engine harness [145]
2	ABS EHCU [166]
3	Rear HO2S [137]

4	Starter solenoid [128]
5	Rear WSS [168]

Figure 3. Behind Right Side Cover

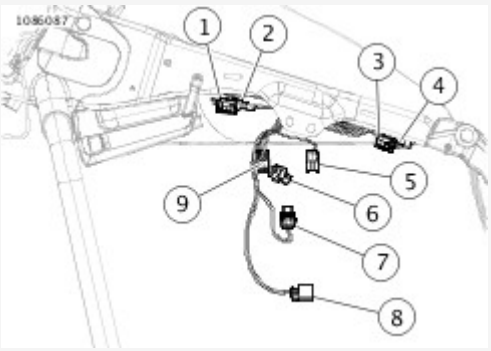

View interactive image

1	Front knock sensor [315]
2	Front ACR [203F]
3	Rear knock sensor [316]
4	Rear ACR [203R]
5	Rear injector [85]
6	TMAP [80]
7	Ignition coil [83]
8	Throttle control [211]
9	Front injector [84]

Figure 4. Engine

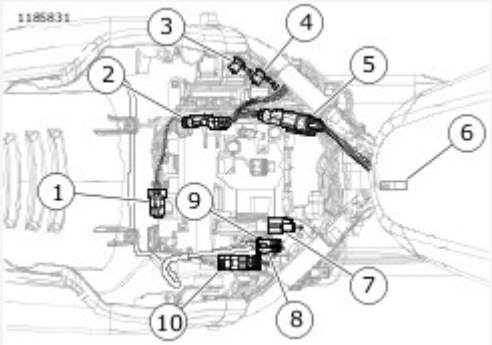

View interactive image

1	Purge solenoid [95]

2	Engine harness [145]
3	GND 1
4	GND 2
5	Backbone harness interconnect [327]
6	Engine harness interconnect [328]
7	Security antenna [209]
8	Left rear lighting [19]
9	Right rear lighting [18]
10	Tail lamp [40]

Figure 5. Under Seat

Conditions for Setting

DTC B2104 will set if the system power circuit draws more than 10 Amps.

Diagnostic Tips

Since the system power circuit normally has ignition voltage with IGN ON, the short to voltage will have to be present with the vehicle turned off in order to set DTC B2102.

When disconnecting connectors, always inspect connector for corrosion or backed out terminals and repair as required.

Connector Information

For additional information about the connectors in the following diagram(s) and diagnostic procedure(s), see **Wiring → Wire Harness Connectors → General**.

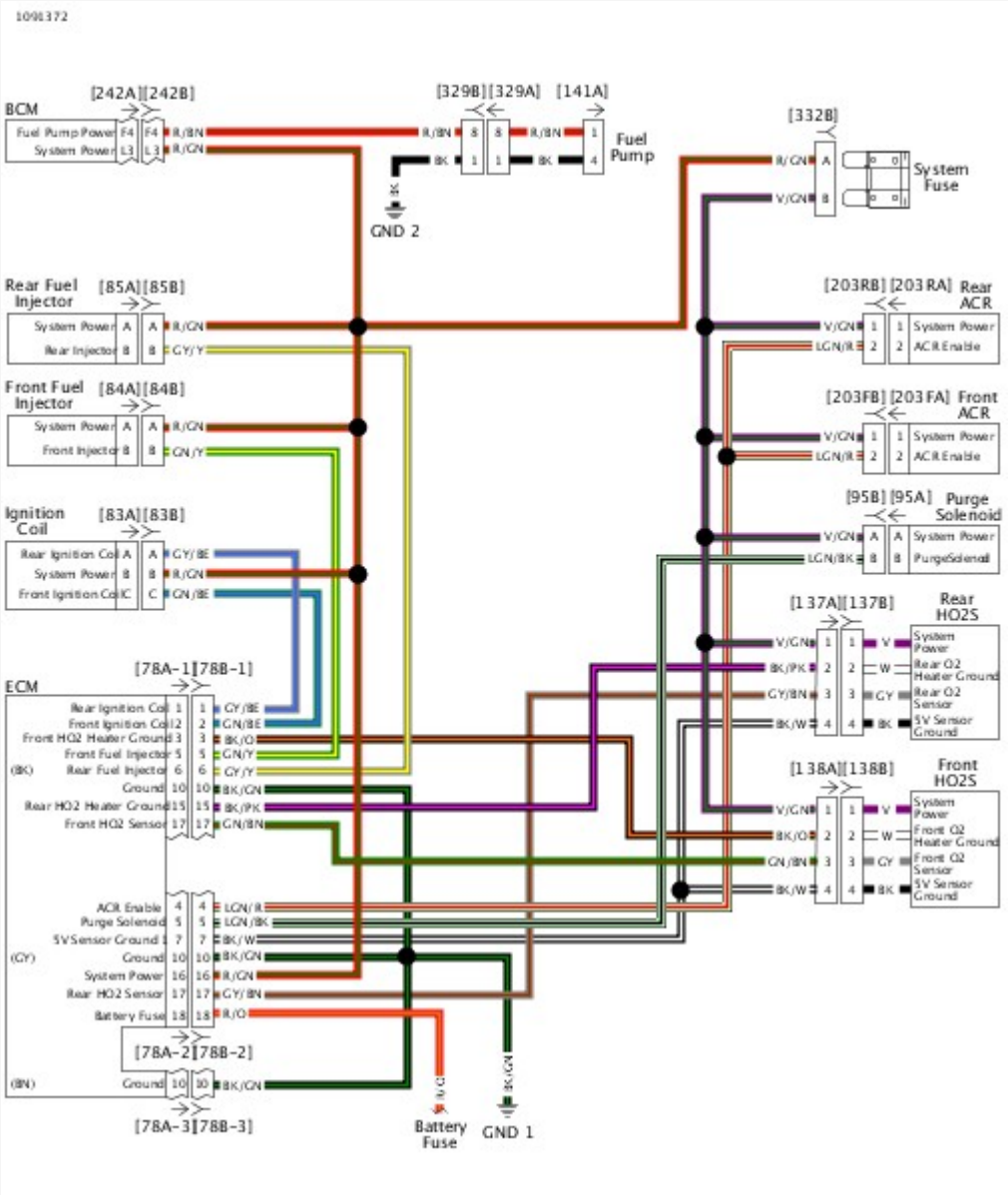

View interactive image

Figure 6. System Power Circuit

Special Tools

Description	Part Number	Qty.
TEST CONNECTOR KIT	HD-41404	1
BREAKOUT BOX	HD-50390-1	1
ECM CABLE	HD-50390-4	1
ECM OVERLAY	HD-50390-4-P	1

Table 1. DTC B2102 Diagnostic Faults

POSSIBLE CAUSES
Short to battery in the system power circuit

1. System Power Circuit Short to Voltage Test

1. Turn IGN OFF.
2. Connect **BREAKOUT BOX (Part Number:HD-50390-1)** and **ECM CABLE (Part Number:HD-50390-4)** to [78B-1], 78B-2] and [78B-3], leaving ECM [78A-1], [78A-2] and [78A-3] disconnected. See **Initial Diagnostics → DIAGNOSTIC TOOLS**.
3. Verify **ECM OVERLAY (Part Number:HD-50390-4-P)** is in position on BOB.
4. Using **TEST CONNECTOR KIT (Part Number:HD-41404)**, test voltage between BOB [78-2] terminal 16 and ground.
5. Is battery voltage present?

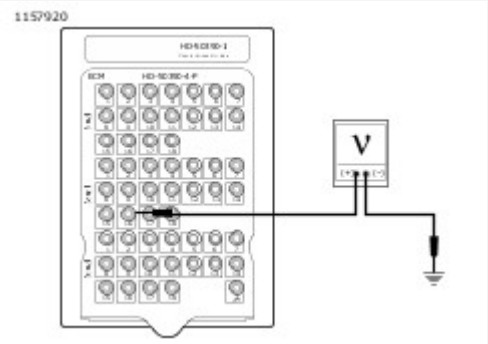

View interactive image

Figure 1.

a. **Yes.** Repair short to voltage in (R/GN) wire.
b. **No.** Replace BCM.

Special Tools

Description	Part Number	Qty.
TEST CONNECTOR KIT	HD-41404	1
BREAKOUT BOX	HD-50390-1	1
BCM CABLE	HD-50390-2	1
BCM OVERLAY	HD-50390-2-P	1

Table 1. DTC B2103, B2104 Diagnostic Faults

POSSIBLE CAUSES
Short to ground in the system power circuit
Ignition coil resistance too low
Front coil shorted low
Rear coil shorted low
Front HO2S resistance too low
Rear HO2S resistance too low
Front fuel injector resistance too low
Rear fuel injector resistance too low
ACR resistance too low
Purge solenoid resistance too low

1. Fuse Test

1. Inspect the system fuse.
2. Is the fuse good?
    a. **Yes.** Go to Test 2.
    b. **No.** Go to Test 14.

2. Ignition Coil Test

1. Turn IGN OFF.
2. Disconnect ignition coil [83].
3. Clear DTCs.
4. Turn IGN ON.
5. Check DTCs.
6. Did DTC reset?
    a. **Yes.** Go to Test 3.

b. **No.** Replace ignition coil.

3. Rear Coil Shorted to Ground Test

1. Using [TEST CONNECTOR KIT (Part Number:HD-41404)](), test continuity between [83B] terminal A and ground.
2. Is continuity present?

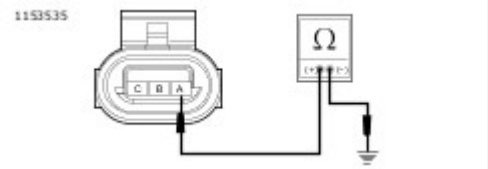

View interactive image

Figure 1.

a. **Yes.** Repair short to ground on (GY/BE) wire.
b. **No.** [Go to Test 4.]()

4. Front Coil Shorted to Ground Test

1. Test continuity between [83B] terminal C and ground.
2. Is continuity present?

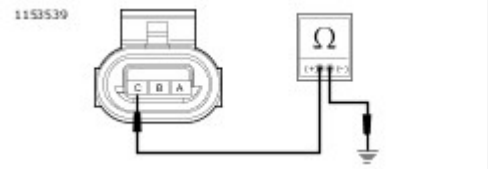

View interactive image

Figure 2.

a. **Yes.** Repair short to ground on (GN/BE) wire.
b. **No.** [Go to Test 5.]()

5. Rear Fuel Injector Test

1. Turn IGN OFF.
2. Connect [83].
3. Disconnect rear fuel injector [85].
4. Clear DTCs.
5. Turn IGN ON.
6. Check DTCs.
7. Did DTC reset?
   a. **Yes.** [Go to Test 6.]()
   b. **No.** Replace rear fuel injector.

6. Front Fuel Injector Test

1. Turn IGN OFF.
2. Connect [85].
3. Disconnect front fuel injector [84].
4. Clear DTCs.
5. Turn IGN ON.
6. Check DTCs.
7. Did DTC reset?
    a. **Yes.** Go to Test 7.
    b. **No.** Replace front fuel injector.

7. Purge Solenoid Test

1. Turn IGN OFF.
2. Disconnect purge solenoid [95].
3. Clear DTCs.
4. Turn IGN ON.
5. Check DTCs.
6. Did DTC reset?
    a. **Yes.** Go to Test 8.
    b. **No.** Replace purge solenoid.

8. Front HO2S Test

1. Turn IGN OFF.
2. Connect [95].
3. Disconnect front HO2S [138].
4. Clear DTCs.
5. Turn IGN ON.
6. Check DTCs.
7. Did DTC reset?
    a. **Yes.** Go to Test 9.
    b. **No.** Replace front HO2S.

9. Rear HO2S Test

1. Turn IGN OFF.
2. Connect [138].
3. Disconnect rear HO2S [137].
4. Clear DTCs.
5. Turn IGN ON.
6. Check DTCs.
7. Did DTC reset?
    a. **Yes.** Go to Test 10.
    b. **No.** Replace rear HO2S.

10. Front ACR Test

1. Turn IGN OFF.

2. Connect [137].
3. Disconnect front ACR [203F].
4. Clear DTCs.
5. Turn IGN ON.
6. Check DTCs.
7. Did DTC reset?
    a. **Yes.** Go to Test 11.
    b. **No.** Replace front ACR.

11. Rear ACR Test

1. Turn IGN OFF.
2. Connect [203F].
3. Disconnect rear ACR [203R].
4. Clear DTCs.
5. Turn IGN ON.
6. Check DTCs.
7. Did DTC reset?
    a. **Yes.** Go to Test 12.
    b. **No.** Replace rear ACR.

12. ECM Test

1. Turn IGN OFF.
2. Connect [85].
3. Disconnect ECM [78-2].
4. Clear DTCs.
5. Turn IGN ON.
6. Check DTCs.
7. Did DTC reset?
    a. **Yes.** Go to Test 13.
    b. **No.** Replace ECM.

13. BCM Test

1. Turn IGN OFF.
2. Connect [78].
3. Connect BREAKOUT BOX (Part Number:HD-50390-1) and BCM CABLE (Part Number:HD-50390-2) to wire harness [242B] leaving BCM [242A] disconnected. See Initial Diagnostics → DIAGNOSTIC TOOLS.
4. Verify BCM OVERLAY (Part Number:HD-50390-2-P) is in position on BOB.
5. Test continuity between BOB terminal L3 and ground.
6. Is continuity present?

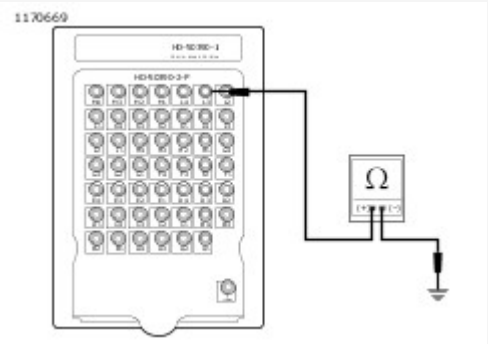

View interactive image

Figure 3.

a. **Yes.** Repair short to ground in (R/GN) wire.
b. **No.** Replace BCM.

14. System Power Short to Ground Test

1. Test continuity between [332] terminal B and ground.
2. Disconnect front and rear HO2S, front and rear ACRs, purge solenoid and active exhaust (if equipped).
3. Was continuity lost as components were removed?

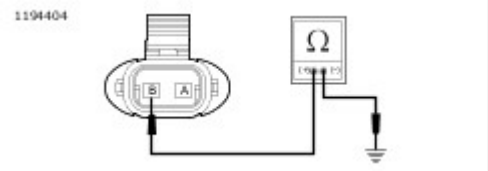

View interactive image

Figure 4.

a. **Yes.** Replace last component removed when continuity was lost.
b. **No.** Repair short to ground in (V/GN) wire.

See Figure 1. The BCM supplies and monitors the 12V system power circuit from terminal F4 of the BCM to the fuel pump. The fuel pump is constantly grounded. The BCM controls the fuel pump by turning on and off the power to the pump on the (R/BN) wire.

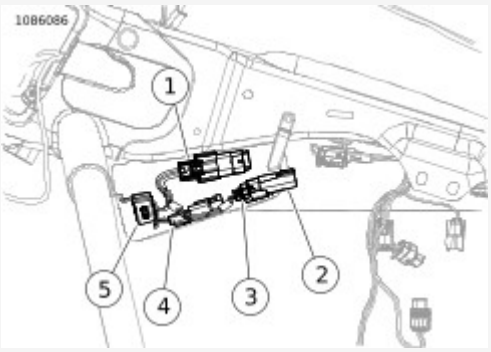

View interactive image

1	USB caddy interconnect [329]
2	USB [264]
3	Fuel pump [141]
4	ET sensor [90]

Figure 1. Under Fuel Tank Left Side

Table 1. Code Description

DTC	DESCRIPTION
B2116	Fuel pump output open
B2117	Fuel pump output shorted high
B2118	Fuel pump output shorted low
B2119	Fuel pump output overloaded

Conditions for Setting

DTC B2116 will set if the fuel pump circuit draws less than 600 milliamps.

DTC B2119 will set if the fuel pump circuit draws more than 6 Amps.

Diagnostic Tips

DTC B2119 can set if the BCM sees an excessive load on the fuel pump circuit. This could be caused by a fuel pump being run dry. If the fuel pump was replaced or the vehicle was run out of gas, prime the pump and clear the code. Start the vehicle and check DTCs to see if the code returns.

Any circuit that is powered up continually with IGN ON could cause DTC B2117 or B2119 to set if shorted to the fuel pump circuit. If a short to voltage or overload conditon is found, test continuity between fuel pump circuit and the other power circuits from the BCM.

Connector Information

For additional information about the connectors in the following diagram(s) and diagnostic procedure(s), see **Wiring → Wire Harness Connectors → General**.

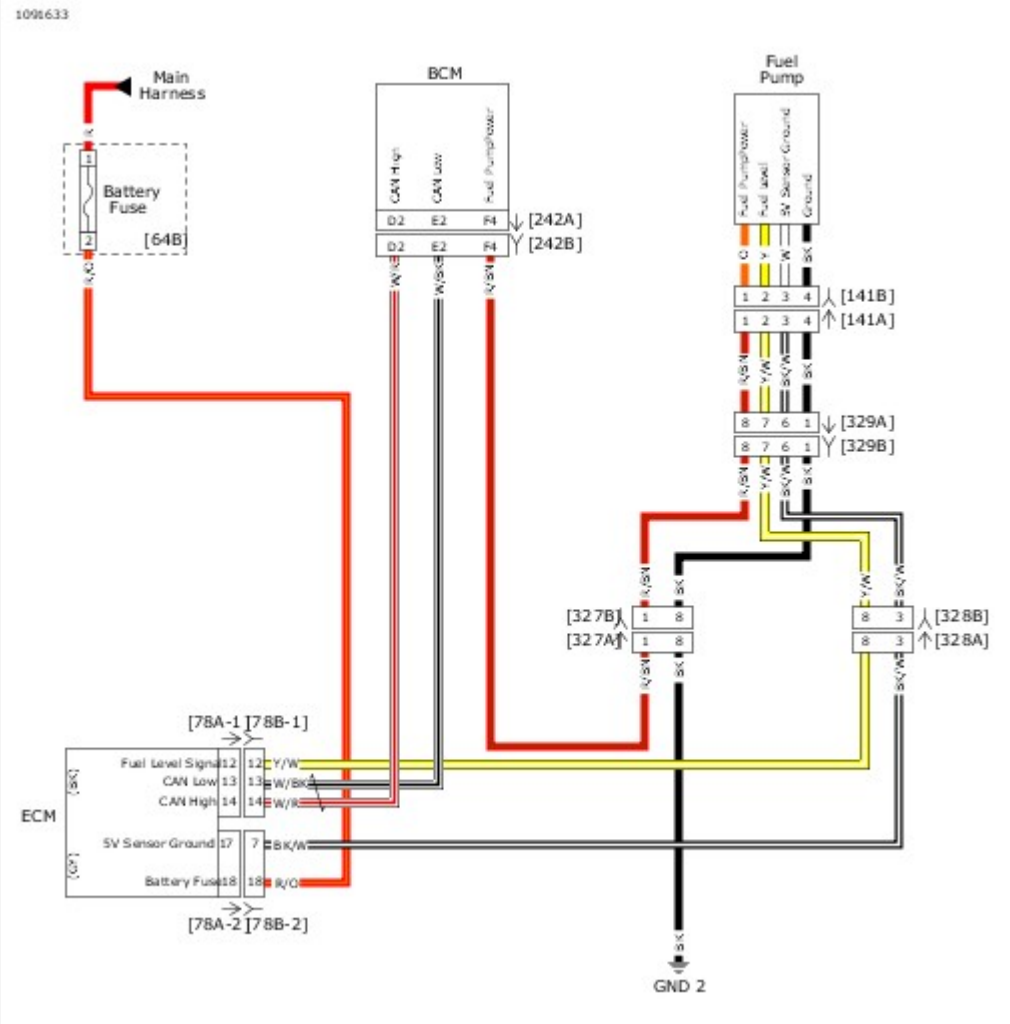

View interactive image

Figure 2. Fuel Sensor Circuit

Special Tools

Description	Part Number	Qty.
TEST CONNECTOR KIT	HD-41404	1
BREAKOUT BOX	HD-50390-1	1
BCM CABLE	HD-50390-2	1
BCM OVERLAY	HD-50390-2-P	1

Table 1. DTC B2116 Diagnostic Faults

POSSIBLE CAUSES
Open in the fuel pump power circuit
Fuel pump fault or malfunction

1. Fuel Pump Circuit Test

1. Turn IGN OFF.
2. Disconnect fuel pump [141].
3. Using [TEST CONNECTOR KIT (Part Number:HD-41404)](), test voltage between [141B] terminals 1 and 4.
4. Turn IGN ON.
5. Was battery voltage displayed for a short time?

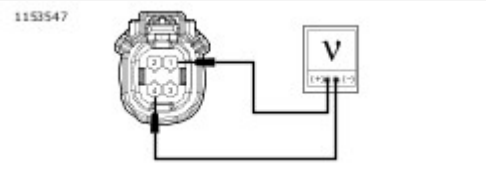

View interactive image

Figure 1.

a. **Yes.** Replace fuel pump.
b. **No.** [Go to Test 2.]()

2. Ground Circuit Open Test

1. Turn IGN OFF.
2. Test resistance between [141B] terminal 4 and ground.
3. Is resistance less than 0.5 ohms?

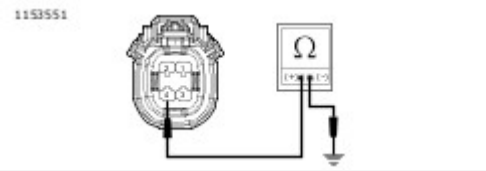

View interactive image

Figure 2.

a. **Yes.** Go to Test 3.
b. **No.** Repair open in (BK) ground wire.

3. Power Circuit Open Test

1. Connect BREAKOUT BOX (Part Number:HD-50390-1) and BCM CABLE (Part Number:HD-50390-2) to wire harness [242B], leaving BCM [242A] disconnected. See Initial Diagnostics → DIAGNOSTIC TOOLS.
2. Verify BCM OVERLAY (Part Number:HD-50390-2-P) is in position on BOB.
3. Test resistance between BOB terminal F4 and [141B] terminal 1.
4. Is resistance less than 0.5 ohm?

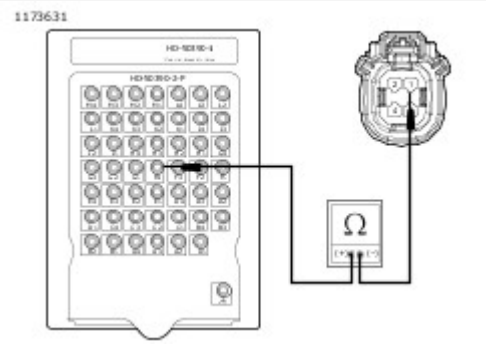

View interactive image

Figure 3.

a. **Yes.** Replace BCM.
b. **No.** Repair open in (R/BN) wire.

Table 1. DTC B2117 Diagnostic Faults

POSSIBLE CAUSES
Short to voltage in the fuel pump power circuit

1. Fuel Pump Power Circuit Short to Voltage Test

1. Turn IGN ON.
2. Does fuel pump continue to run after the initial 2 second start up?
    a. **Yes.** Repair short to voltage in (R/BN) wire. See diagnostic tips. If no source of short is found, replace BCM.
    b. **No.** Go to Test 2.

2. Code Verification Test

1. Clear DTC.
2. Start engine.
3. Check DTCs.
4. Did DTC reset?
    a. **Yes.** Replace BCM.
    b. **No.** Concern is intermittent. See Initial Diagnostics → DIAGNOSTICS AND TROUBLESHOOTING → Wiggle Test.

Table 1. DTC B2118, B2119 Diagnostic Faults

POSSIBLE CAUSES
Short to ground in the fuel pump power circuit
Fuel pump malfunction

1. Fuel Test

1. Verify there is fuel in fuel tank.
2. Is fuel present in tank?
    a. **Yes.** Go to Test 2.
    b. **No.** Fill tank with fuel and clear DTCs. If the DTC returned, then continue with tests. Go to Test 2.

2. Fuel Pump Test

1. Turn IGN OFF.
2. Disconnect fuel pump [141].
3. Clear DTC.
4. Turn IGN ON.
5. Check DTCs.
6. Did DTC reset?
    a. **Yes.** Go to Test 3.
    b. **No.** Replace fuel pump.

3. Power Circuit Short to Ground Test

1. Turn IGN OFF.
2. Disconnect BCM [242].
3. Test continuity between [141B] terminal 1 (R/BN) wire and ground.
4. Is continuity present?

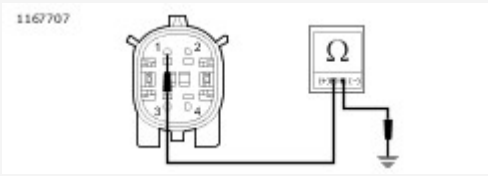

View interactive image

Figure 1.

    a. **Yes.** Repair short to ground on (R/BN) wire.
    b. **No.** See diagnostic tips. If problem not found, replace BCM.

Special Tools

Description	Part Number	Qty.
VACUUM PUMP	HD-23738	1

See Figure 1. The TMAP sensor provides the functions of both an IAT sensor and a MAP sensor in one unit. The TMAP sensor is supplied 5V from ECM [78-3] terminal 18. It sends MAP and IAT signals back to ECM [78-1] terminal 7 and [78-2] terminal 6, respectively. Refer to Table 1.

Table 1. Code Description

DTC	DESCRIPTION
P0107	MAP sensor open/low
P0108	MAP sensor high
P0112	IAT sensor voltage low
P0113	IAT sensor open/high

TMAP: MAP Signal

The MAP signal varies in accordance with engine vacuum and atmospheric pressure. Changes in atmospheric pressure are influenced by weather and altitude.

TMAP: IAT Signal

The IAT portion of the TMAP sensor is a thermistor device. At a specific temperature, it will have a specific resistance across its terminals. As this resistance varies, so does the voltage on [78-2] terminal 6 of the ECM.

- At high temperatures, the resistance of the IAT sensor is very low, which effectively lowers the signal voltage on [78-2] terminal 6.
- At low temperatures, the resistance is very high, allowing the voltage to rise close to 5V. The ECM monitors this voltage to compensate for various operating conditions.

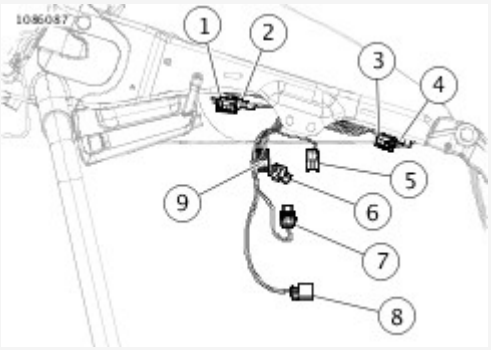

View interactive image

1	Front knock sensor [315]
2	Front ACR [203F]

3	Rear knock sensor [316]
4	Rear ACR [203R]
5	Rear injector [85]
6	TMAP [80]
7	Ignition coil [83]
8	Throttle control [211]
9	Front injector [84]

Figure 1. Engine

Diagnostic Tips: MAP Portion of TMAP Sensor

- DTCs P0107 or P0108 will set if the MAP sensor signal is out of range. DTC P0108 can only be detected with the engine running.
- Using the **VACUUM PUMP (Part Number:HD-23738)**, apply a vacuum to the pressure port of the TMAP sensor. The MAP signal voltage should lower as the vacuum is applied.
- The TMAP and TGS are connected to the same reference line (+5V Vref). If the reference line goes to ground or open, multiple codes will be set (DTCs P0107, P0108, P0122, P0123, P1501 and P1502).

Connector Information

For additional information about the connectors in the following diagram(s) and diagnostic procedure(s), see **Wiring → Wire Harness Connectors → General**.

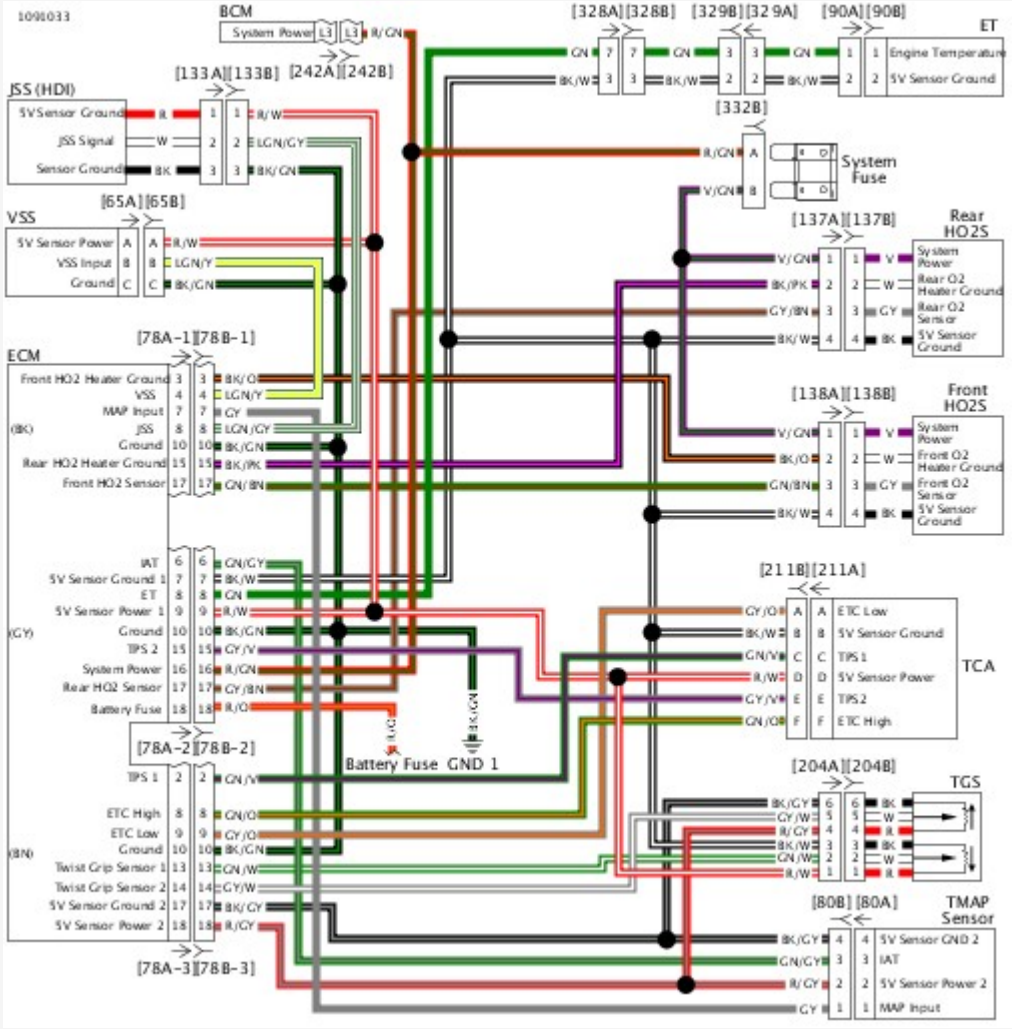

View interactive image

Figure 2. Sensor Circuit

Special Tools

Description	Part Number	Qty.
TEST CONNECTOR KIT	HD-41404	1
BREAKOUT BOX	HD-50390-1	1
ECM CABLE	HD-50390-4	1
ECM OVERLAY	HD-50390-4-P	1

Table 1. DTC P0107 Diagnostic Faults

POSSIBLE CAUSES
MAP sensor malfunction
Open or shorted to ground signal wire
Open or shorted to ground 5V reference circuit

1. MAP Sensor Test

1. Turn IGN OFF.
2. Disconnect TMAP sensor [80].
3. Using **TEST CONNECTOR KIT (Part Number:HD-41404)**, jumper between [80B] terminals 1 (GY) wire and 2 (R/GY) wire.
4. Clear DTCs.
5. Start engine.
6. Turn IGN ON.
7. Check DTCs.
8. Did DTC reset?

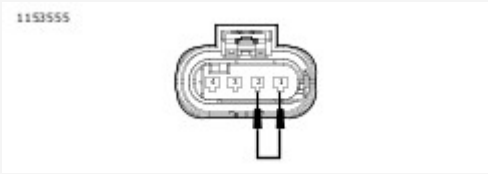

View interactive image

Figure 1.

a. **Yes.** Go to Test 2.
b. **No.** Replace TMAP sensor.

2. MAP Sensor Signal Voltage Test

1. Turn IGN OFF.
2. Remove jumper.
3. Turn IGN ON.

4. Test voltage between [80B] terminal 2 (R/GY) wire and ground.
5. Is voltage approximately 5V?

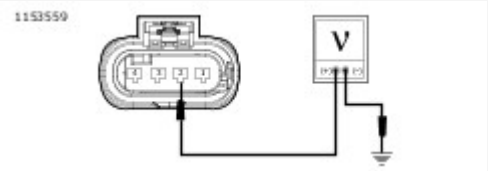

View interactive image

Figure 2.

a. **Yes.** Go to Test 3.
b. **No.** Go to Test 6.

3. MAP Sensor Signal Wire Continuity Test

1. Turn IGN OFF.
2. Connect BREAKOUT BOX (Part Number:HD-50390-1) and ECM CABLE (Part Number:HD-50390-4) to wiring harness [78B-1], [78B-2] and [78B-3], leaving ECM [78A-1], [78A-2] and [78A-3] disconnected. See Initial Diagnostics → DIAGNOSTIC TOOLS.
3. Verify ECM OVERLAY (Part Number:HD-50390-4-P) is in position on BOB.
4. Test resistance between [80B] terminal 1 (GY) wire and BOB [78-1] terminal 7.
5. Is resistance less than 0.5 ohms?

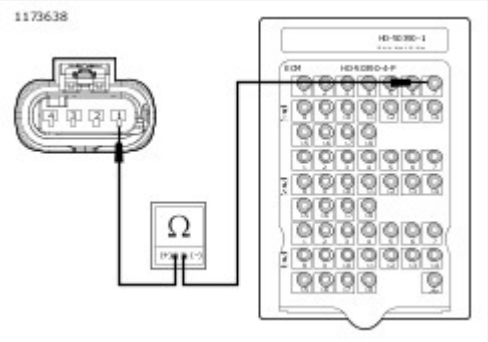

View interactive image

Figure 3.

a. **Yes.** Go to Test 4.
b. **No.** Repair open in (GY) wire.

4. MAP Sensor Signal Wire Shorted to Ground Test

1. Test continuity between BOB [78-1] terminal 7 and ground.
2. Is continuity present?

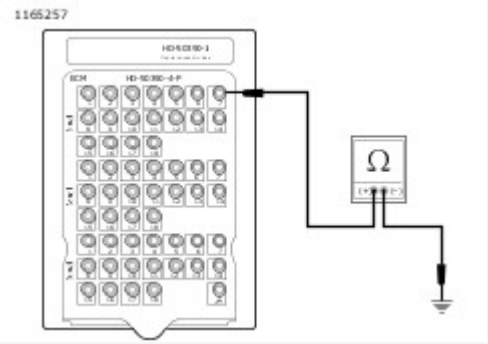

View interactive image

Figure 4.

a. **Yes.** Repair short to ground in (GY) wire.
b. **No.** Go to Test 5.

5. MAP Sensor Signal Wire Shorted to Sensor Ground Test

1. Test continuity between BOB [78-1] terminal 7 and [78-3] terminal 17.
2. Is continuity present?

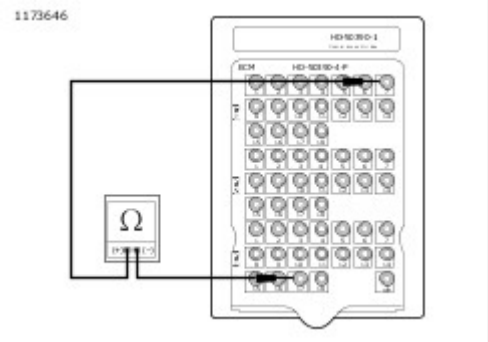

View interactive image

Figure 5.

a. **Yes.** Repair short between (GY) and (BK/GY) wires.
b. **No.** Replace ECM.

6. MAP Sensor 5V Reference Wire Open Test

1. Turn IGN OFF.
2. Connect BREAKOUT BOX (Part Number:HD-50390-1) and ECM CABLE (Part Number:HD-50390-4) to wiring harness [78B-1], [78B-2] and [78B-3], leaving ECM [78A-1], [78A-2] and [78A-3] disconnected. See Initial Diagnostics → DIAGNOSTIC TOOLS.
3. Verify ECM OVERLAY (Part Number:HD-50390-4-P) is in position on BOB.
4. Test resistance between [80B] terminal 2 (R/GY) wire and BOB [78-3] terminal 18.
5. Is resistance less than 0.5 ohms?

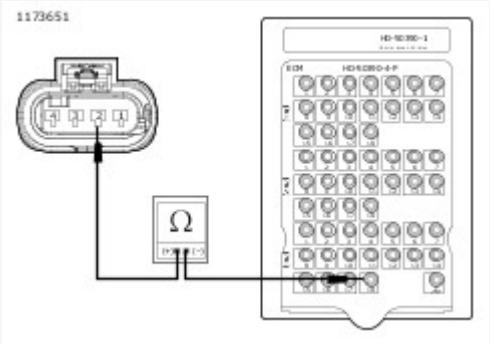

View interactive image

Figure 6.

a. **Yes.** [Go to Test 7.](#)
b. **No.** Repair open in (R/GY) wire.

7. MAP Sensor 5V Reference Shorted to Signal Ground Test

1. Test continuity between BOB [78-3] terminals 17 and 18.
2. Is continuity present?

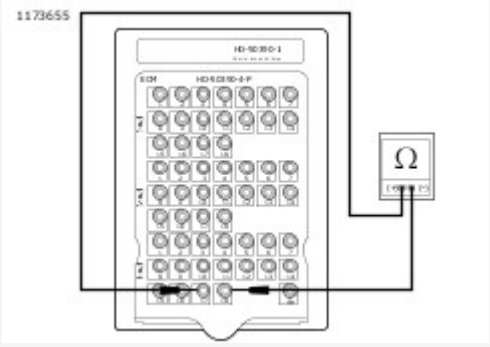

View interactive image

Figure 7.

a. **Yes.** Repair short between the (R/GY) and (BK/GY) wires.
b. **No.** See diagnostic tips before replacement. Replace ECM.

Special Tools

Description	Part Number	Qty.
TEST CONNECTOR KIT	HD-41404	1
BREAKOUT BOX	HD-50390-1	1
ECM CABLE	HD-50390-4	1
ECM OVERLAY	HD-50390-4-P	1

Table 1. DTC P0108 Diagnostic Faults

POSSIBLE CAUSES
MAP sensor malfunction
Short to voltage

1. MAP Sensor Test

1. Turn IGN OFF.
2. Disconnect TMAP sensor [80].
3. Clear DTC.
4. Start engine.
5. Turn IGN OFF.
6. Check DTCs.
7. Did DTC reset?
    a. **Yes.** Go to Test 2.
    b. **No.** Replace MAP sensor.

2. MAP Sensor Signal Wire Short to 5V Test

1. Turn IGN OFF.
2. Connect BREAKOUT BOX (Part Number:HD-50390-1) and ECM CABLE (Part Number:HD-50390-4) to wire harness [78B-1], [78B-2] and [78B-3], leaving ECM [78A-1], [78A-2] and [78A-3] disconnected. See Initial Diagnostics → DIAGNOSTIC TOOLS.
3. Verify ECM OVERLAY (Part Number:HD-50390-4-P) is in position on BOB.
4. Using TEST CONNECTOR KIT (Part Number:HD-41404), test continuity between BOB [78-1] terminal 7 and [78-3] terminal 18.
5. Is continuity present?

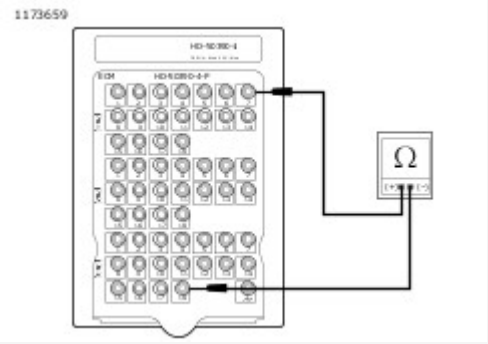

View interactive image

Figure 1.

a. **Yes.** Repair short between (R/GY) and (GY) wires.
b. **No.** Go to Test 3.

3. MAP Sensor Signal Wire Short to Voltage Test

1. Turn IGN ON.
2. Test voltage between BOB [78-1] terminal 7 and ground.
3. Is voltage present?

Figure 2.

a. **Yes.** Repair short to voltage in (GY) wire.
b. **No.** Go to Test 4.

4. MAP Sensor 5V Reference Shorted to Battery Voltage Test

1. Test voltage between BOB [78-3] terminal 18 and ground.
2. Is voltage greater than 5.25V?

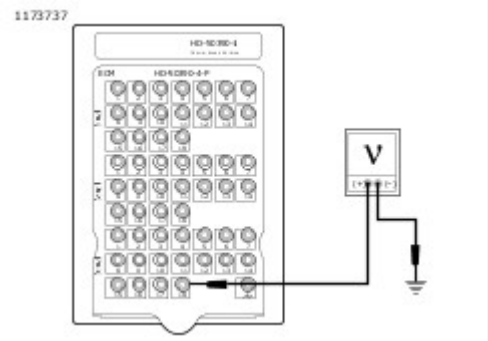

View interactive image

Figure 3.

a. **Yes.** Repair short to voltage in (R/GY) wire.
b. **No.** Go to Test 5.

5. MAP Sensor Ground Wire Open Test

1. Test resistance between [80B] terminal 4 and BOB [78-3] terminal 17.
2. Is resistance less than 0.5 ohms?

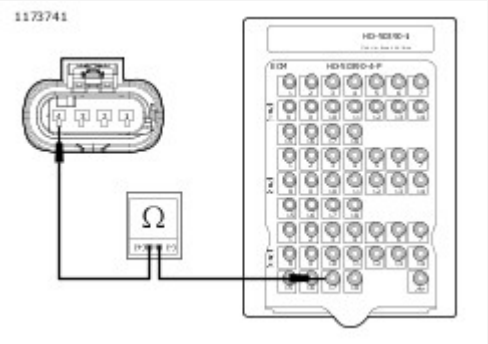

View interactive image

Figure 4.

a. **Yes.** Replace TMAP sensor.
b. **No.** Repair open in (BK/GY) wire.

Special Tools

Description	Part Number	Qty.
TEST CONNECTOR KIT	HD-41404	1
BREAKOUT BOX	HD-50390-1	1
ECM CABLE	HD-50390-4	1
ECM OVERLAY	HD-50390-4-P	1

Table 1. DTC P0112 Diagnostic Faults

POSSIBLE CAUSES
Short to ground in 5V reference circuit

NOTE

Vehicle and sensor must be at ambient room temperature before starting diagnostic test.

1. IAT Sensor Test

1. Turn IGN OFF.
2. Disconnect TMAP sensor [80].
3. Using **TEST CONNECTOR KIT (Part Number:HD-41404)**, test resistance between [80A] terminals 4 and 3.
4. Is resistance between 500-5000 ohms?

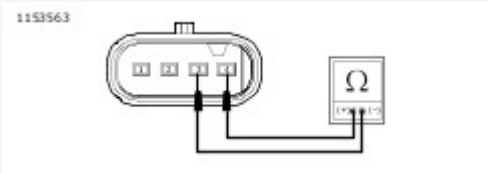

View interactive image

Figure 1.

a. **Yes.** **Go to Test 2.**
b. **No.** Replace TMAP sensor.

2. IAT Sensor Signal Wire Shorted to Ground Test

1. Test resistance between [80B] terminal 3 (GN/GY) and ground.
2. Is resistance reading less than 1 ohm?

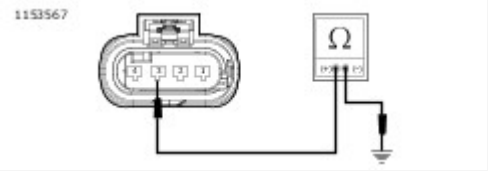

View interactive image

Figure 2.

a. **Yes.** Repair short to ground on (GN/GY) wire.
b. **No.** Go to Test 3.

3. IAT Sensor Signal Voltage High Test

1. Connect BREAKOUT BOX (Part Number:HD-50390-1) and ECM CABLE (Part Number:HD-50390-4) to wire harness [78B-1], [78B-2] and [78B-3], leaving ECM [78A-1], [78A-2] and [78A-3] disconnected. See Initial Diagnostics → DIAGNOSTIC TOOLS.
2. Verify ECM OVERLAY (Part Number:HD-50390-4-P) is in position on BOB.
3. Test continuity between BOB [78-2] terminals 6 and 10.
4. Is continuity present?

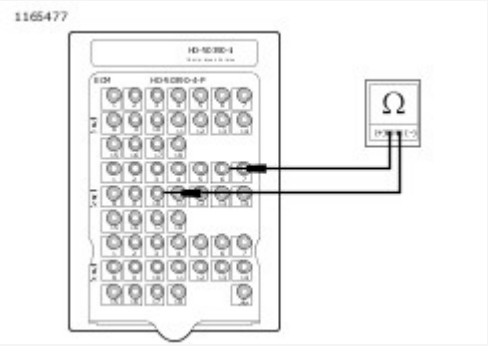

View interactive image

Figure 3.

a. **Yes.** Go to Test 4.
b. **No.** Repair short to ground on (GN/GY) wire.

4. IAT Sensor Signal Wire Shorted to Sensor Ground Test

1. Test continuity between BOB [78-2] terminal 6 and [78-3] terminal 17.
2. Is continuity present?

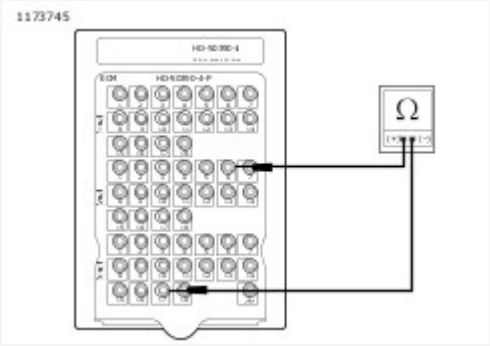

View interactive image

Figure 4.

a. **Yes.** Repair short between [80B] terminals 4 and 3 (GN/GY and BK/GY) wires.
b. **No.** Replace ECM.

Special Tools

Description	Part Number	Qty.
TEST CONNECTOR KIT	HD-41404	1
BREAKOUT BOX	HD-50390-1	1
ECM CABLE	HD-50390-4	1
ECM OVERLAY	HD-50390-4-P	1

Table 1. DTC P0113 Diagnostic Faults

POSSIBLE CAUSES
Open or short to voltage in 5V reference circuit

NOTE

Vehicle and sensor must be at ambient temperature before starting diagnostic test.

1. IAT Sensor Test

1. Turn IGN OFF.
2. Disconnect TMAP sensor [80].
3. Using **TEST CONNECTOR KIT (Part Number:HD-41404)**, test resistance between [80A] terminals 1 (BK/GY) wire and 2 (GN/GY) wire.
4. Is resistance between 500-5000 ohms?

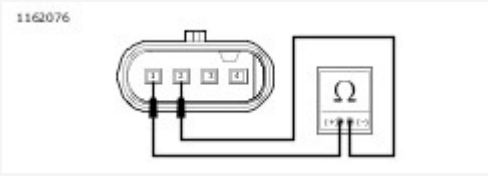

View interactive image

Figure 1.

a. **Yes.** **Go to Test 2.**
b. **No.** Replace TMAP sensor.

2. IAT Signal Voltage Test

1. Turn IGN ON.
2. Using **TEST CONNECTOR KIT (Part Number:HD-41404)**, test voltage between [80B] terminal 3 (GN/GY) and ground.
3. Is voltage greater than 6V?

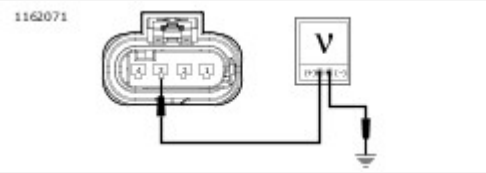

View interactive image

Figure 2.

a. **Yes.** Repair short to voltage on (GN/GY) wire.
b. **No.** Go to Test 3.

3. Signal Wire Open Test

1. Turn IGN OFF.
2. Connect BREAKOUT BOX (Part Number:HD-50390-1) and ECM CABLE (Part Number:HD-50390-4) to wiring harness [78B-1], [78B-2] and [78B-3], leaving ECM [78A-1], [78A-2] and [78A-3] disconnected. See Initial Diagnostics → DIAGNOSTIC TOOLS.
3. Verify ECM OVERLAY (Part Number:HD-50390-4-P) is in position on BOB.
4. Test resistance between [80B] terminal 3 (GN/GY) and BOB [78-2] terminal 6.
5. Is resistance less than 0.5 ohms?

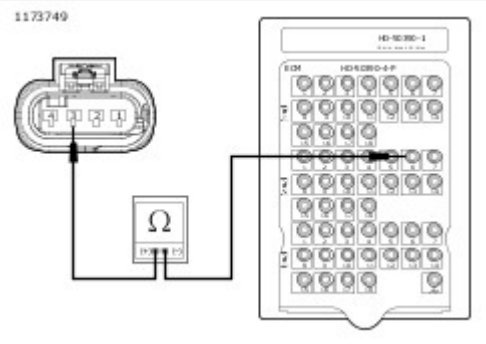

View interactive image

Figure 3.

a. **Yes.** Go to Test 4.
b. **No.** Repair open circuit in (GN/GY) wire.

4. Open Ground Wire Test

1. Test resistance between BOB [78-3] terminal 17 and [80B] terminal 4 (BK/GY).
2. Is resistance less than 0.5 ohms?

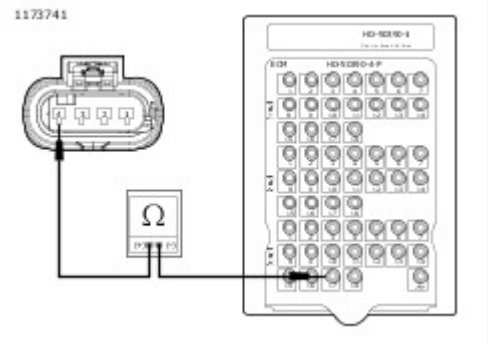

View interactive image

Figure 4.

a. **Yes.** [Go to Test 5.](#)
b. **No.** Repair open in (BK/GY) wire.

5. IAT Sensor Signal Wire Shorted to Sensor Power Test

1. Test continuity between BOB [78-2] terminal 6 and [78-3] terminal 18.
2. Is continuity present?

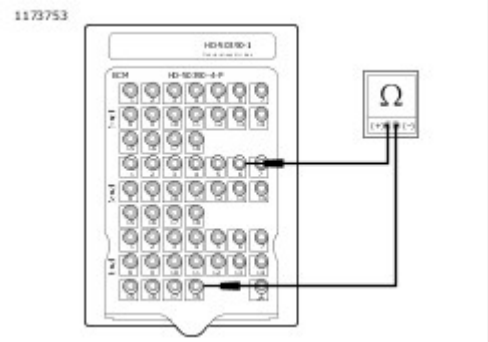

View interactive image

Figure 5.

a. **Yes.** Repair short between (GN/GY) and (R/GY) wires.
b. **No.** Replace ECM.

See Figure 1. A dual TPS is integrated into the TCA, mounted to the induction module.

Within the TCA, a set of potentiometers are designated as TPS (TPS1 and TPS2). The ECM drives the motor in the TCA to open and close the throttle plate based on the signals from the twist grip sensor. The TPS (TPS1 and TPS2) send signals back to the ECM based on throttle plate position to verify the throttle plate movement.

The ECM supplies a 5.0V signal from terminal [78-2] terminal 9 to TPS1 and [78-3] terminal 18 to TPS2. The signals from TPS1 and TPS2 are sent back to the ECM [78-3] terminals 13 and 14 and vary in voltage according to actual throttle plate position.

The two TP sensors work opposite each other. When one sensor reads high, the other reads low. The sum of TPS1 and TPS2 signals should measure around 5.0V.

See Figure 2 for TCA (TPS1 and TPS2) circuitry diagram. Refer to Table 1 for DTCs associated with TPS1 and TPS2 of the TCA.

Table 1. Code Description

DTC	DESCRIPTION
P0120	TPS1 range error
P0122	TPS1 low/open
P0123	TPS1 high
P0220	TPS2 range error
P0222	TPS2 low/open
P0223	TPS2 high

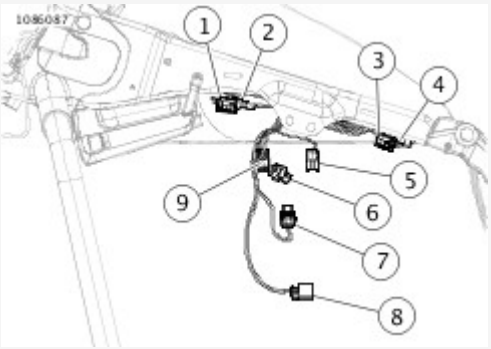

View interactive image

1	Front knock sensor [315]
2	Front ACR [203F]
3	Rear knock sensor [316]
4	Rear ACR [203R]
5	Rear injector [85]
6	TMAP [80]

7	Ignition coil [83]
8	Throttle control [211]
9	Front injector [84]

Figure 1. Engine

NOTE

The TGS, JSS, TCA and VSS sensors are connected to the same reference line (5V reference). If the reference line goes to ground or open, multiple codes will be set (DTC P0122, P0123, P0502, P0503, P1501, P1502, P2101, P2102, P2103, 2122, 2123, P2127, P2128). Start with the trouble code having the highest priority DTC. Refer to Initial Diagnostics → Initial Diagnostics → Diagnostics.

Check for the following conditions:

- **Poor connection:** Inspect ECM harness connector [78B-1], [78B-2] and [78-B-3] for backed out terminals, improper mating, inoperative locks, improperly formed or damaged terminals, poor terminal-to-wire connection and damaged harness.
- **Perform** Initial Diagnostics → DIAGNOSTICS AND TROUBLESHOOTING → Wiggle Test **to locate intermittents:** If connections and harness check out OK, monitor TPS voltage using a multimeter while moving related connectors and wiring harness. If the failure is induced, the TPS voltage will change.
- An intermittent may be caused by poor connection, rubbed through wire insulation or an inoperative wire within the wire insulation.

Diagnostic Tips

A faulty sensor can negatively affect the signal voltage of the other sensors sharing the same 5V reference. If the wiring passes the following tests, disconnect one sensor at a time on the 5V reference and verify the DTC is still present. Additional DTCs will be set as each sensor is disconnected, clear DTCs after this test. Be sure to perform this test before replacing a component.

Connector Information

For additional information about the connectors in the following diagram(s) and diagnostic procedure(s), see Wiring → Wire Harness Connectors → General.

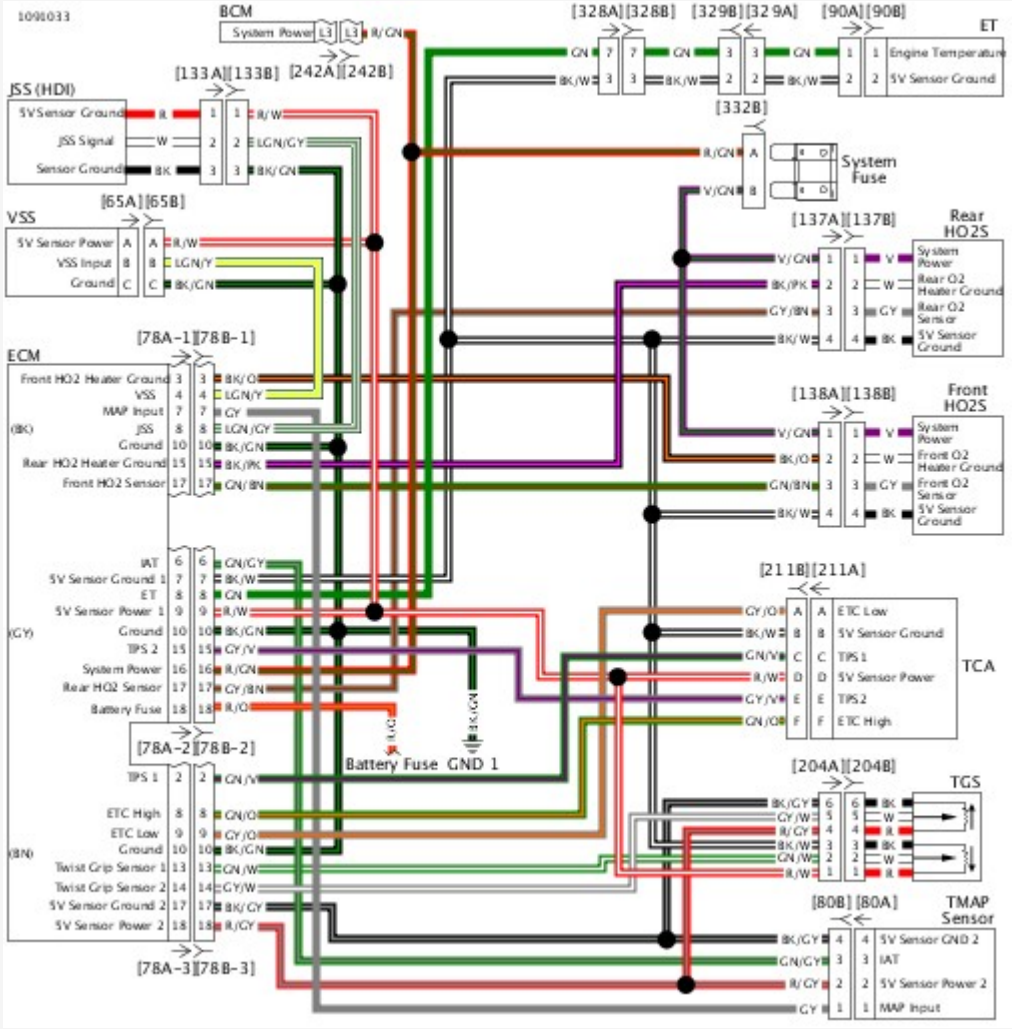

View interactive image

Figure 2. Sensor Circuit

Special Tools

Description	Part Number	Qty.
TEST CONNECTOR KIT	HD-41404	1
BREAKOUT BOX	HD-50390-1	1
ECM CABLE	HD-50390-4	1
ECM OVERLAY	HD-50390-4-P	1

Table 1. DTC P0120 Diagnostic Faults

POSSIBLE CAUSES
Open in sensor power circuit
Short to voltage in TPS-1 circuit
Open in TPS-1 circuit
Short to ground in TPS-1 circuit
Open sensor ground circuit

1. Sensor Power-1 Circuit Test

1. Turn IGN OFF.
2. Connect **BREAKOUT BOX (Part Number:HD-50390-1)** and **ECM CABLE (Part Number:HD-50390-4)** to wiring harness [78B-1], [78B-2] and [78B-3], leaving ECM [78A-1], [78A-2] and [78A-3] disconnected. See **Initial Diagnostics → DIAGNOSTIC TOOLS**.
3. Verify **ECM OVERLAY (Part Number:HD-50390-4-P)** is in position on BOB.
4. Disconnect TCA [211].
5. Using **TEST CONNECTOR KIT (Part Number:HD-41404)**, test resistance between BOB [78-2] terminal 9 and [211B] terminal D.
6. Is resistance less than 0.5 ohms?

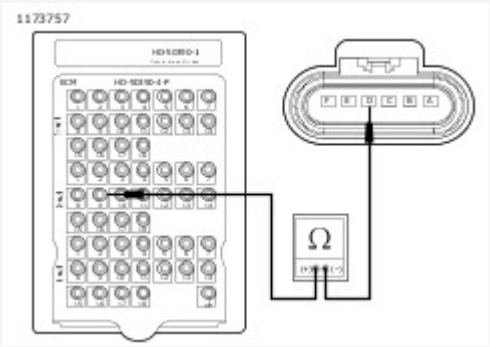

View interactive image

Figure 1.

a. **Yes.** Go to Test 2.
b. **No.** Repair open in (R/W) wire.

2. TPS-1 Circuit Shorted Test

1. Test continuity between BOB [78-2] terminal 9 and [78-3] terminal 2.
2. Is continuity present?

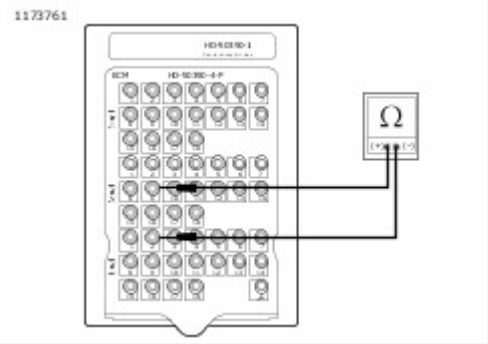

View interactive image

Figure 2.

a. **Yes.** Repair short between (GN/V) and (R/W) wires.
b. **No.** Go to Test 3.

3. TPS-1 Circuit Continuity Test

1. Test resistance between BOB [78-3] terminal 2 and [211B] terminal C.
2. Is resistance less than 0.5 ohms?

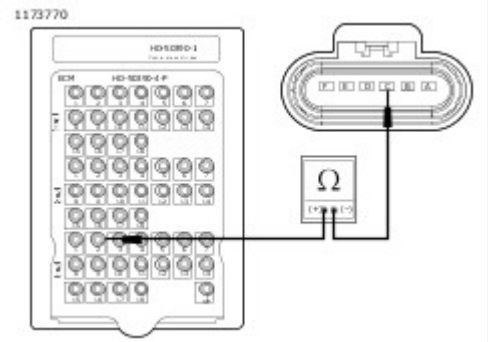

View interactive image

Figure 3.

a. **Yes.** Go to Test 4.
b. **No.** Repair open in (GN/V) wire.

4. TPS-1 Circuit Short to Ground Test

1. Test continuity between BOB [78-3] terminal 2 and ground.

2. Is continuity present?

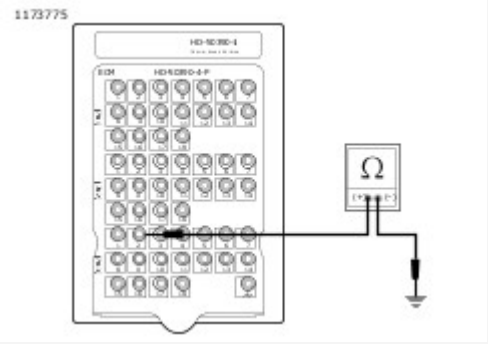

View interactive image

Figure 4.

a. **Yes.** Repair short to ground on (GN/V) wire.
b. **No.** Go to Test 5.

5. TPS-1 Circuit Short to Voltage Test

1. Turn IGN ON.
2. Test voltage between BOB [78-3] terminal 2 and ground.
3. Is voltage present?

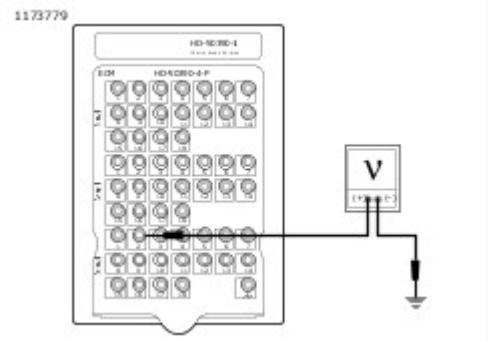

View interactive image

Figure 5.

a. **Yes.** Repair short to voltage on (GN/V) wire.
b. **No.** Go to Test 6.

6. Sensor Ground Continuity Test

1. Test resistance between BOB [78-2] terminal 7 and [211B] terminal B.
2. Is resistance less than 0.5 ohms?

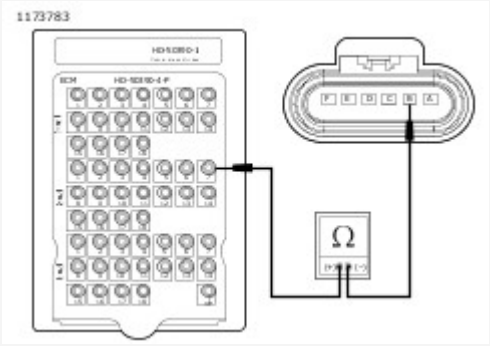

View interactive image

Figure 6.

a. **Yes.** [Go to Test 7.]
b. **No.** Repair open in (BK/W) wire.

7. TCA Test

1. Turn IGN OFF.
2. Connect [78A-1], [78A-2] and [78A-3] to BOB.
3. Connect [211].
4. Turn IGN ON.
5. Test voltage between BOB [78-2] terminal 7 and [78-3] terminal 2.
6. Is voltage between 0.4-4.8V?

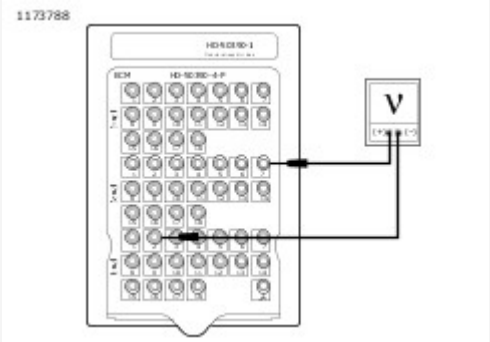

View interactive image

Figure 7.

a. **Yes.** Replace ECM.
b. **No.** Replace TCA.

Special Tools

Description	Part Number	Qty.
TEST CONNECTOR KIT	HD-41404	1
BREAKOUT BOX	HD-50390-1	1
ECM CABLE	HD-50390-4	1
ECM OVERLAY	HD-50390-4-P	1

Table 1. DTC P0122 Diagnostic Faults

POSSIBLE CAUSES
Short to ground in TPS-1 Circuit
Open in sensor power circuit

1. TCA Sensor-1 Circuit Test

1. Turn IGN OFF.
2. Connect **BREAKOUT BOX (Part Number:HD-50390-1)** and **ECM CABLE (Part Number:HD-50390-4)** between wiring harness [78B-1], [78B-2] and [78B-3] and ECM [78A-1], [78A-2] and [78A-3]. See **Initial Diagnostics → DIAGNOSTIC TOOLS**.
3. Verify **ECM OVERLAY (Part Number:HD-50390-4-P)** is in position on BOB.
4. Turn IGN ON.
5. Using **TEST CONNECTOR KIT (Part Number:HD-41404)**, test voltage between BOB [78-3] terminal 2 and [78-2] terminal 7.
6. Is voltage greater than 0.2V?

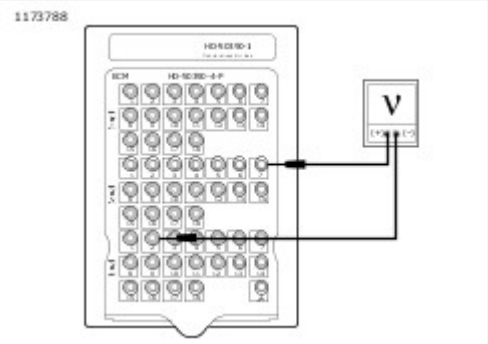

View interactive image

Figure 1.

a. **Yes.** **Go to Test 2.**
b. **No.** **Go to Test 4.**

2. TCA Sensor-1 Circuit Short to Ground Test

1. Turn IGN OFF.
2. Disconnect ECM [78A-1], [78A-2] and [78A-3] from BOB.
3. Disconnect TCA [211].
4. Test continuity between BOB [78-3] terminal 2 and ground.
5. Is continuity present?

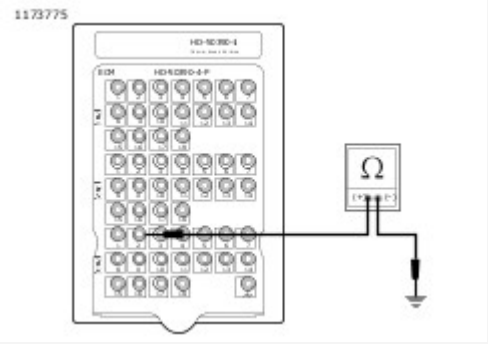

View interactive image

Figure 2.

a. **Yes.** Repair short to ground in (GN/V) wire.
b. **No.** [Go to Test 3.]

3. TCA Power-1 Circuit Open Test

1. Test resistance between BOB [78-2] terminal 9 and [211B] terminal D.
2. Is resistance less than 0.5 ohms?

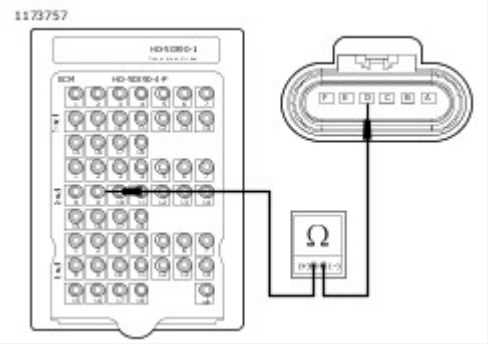

View interactive image

Figure 3.

a. **Yes.** Replace TCA.
b. **No.** Repair open in (R/W) wire.

4. TCA Sensor Test

1. Turn IGN OFF.
2. Disconnect TCA [211].
3. Test voltage between BOB [78-2] terminal 9 and ground.
4. Is voltage greater than 4V?

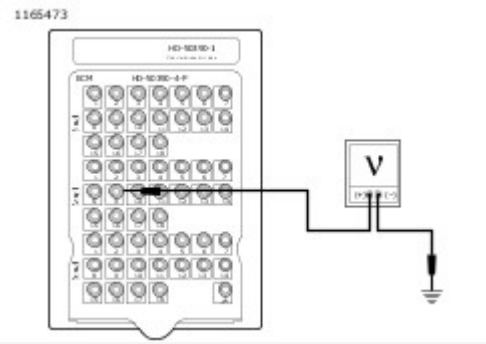

View interactive image

Figure 4.

a. **Yes.** Replace TCA.
b. **No.** [Go to Test 5.](#)

5. ECM Test

1. Disconnect ECM [78A-1], [78A-2] and [78A-3] from BOB.
2. Test continuity between BOB [78-3] terminal 2 and ground.
3. Is continuity present?

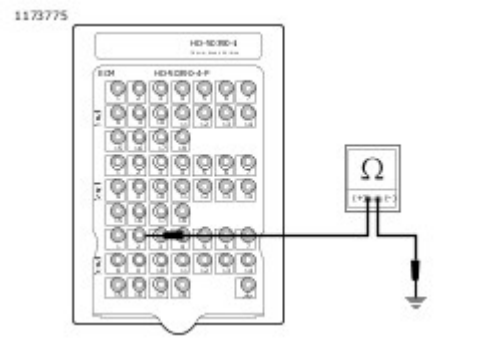

View interactive image

Figure 5.

a. **Yes.** Repair short to ground in (GN/V) wire.
b. **No.** Replace ECM.

Special Tools

Description	Part Number	Qty.
TEST CONNECTOR KIT	HD-41404	1
BREAKOUT BOX	HD-50390-1	1
ECM CABLE	HD-50390-4	1
ECM OVERLAY	HD-50390-4-P	1

Table 1. DTC P0123 Diagnostic Faults

POSSIBLE CAUSES
Open in TPS-1 circuit
Short to voltage in TPS-1 circuit
Short to voltage in sensor power circuit
Open in sensor ground circuit

1. TPS-1 Voltage Test

1. Turn IGN OFF.
2. Connect **BREAKOUT BOX (Part Number:HD-50390-1)** and **ECM CABLE (Part Number:HD-50390-4)** between wiring harness [78B-1], [78B-2] and [78B-3], and ECM [78A-1], [78A-2] and [78A-3]. See **Initial Diagnostics → DIAGNOSTIC TOOLS**.
3. Verify **ECM OVERLAY (Part Number:HD-50390-4-P)** is in position on BOB.
4. Turn IGN ON.
5. Using **TEST CONNECTOR KIT (Part Number:HD-41404)**, test voltage between BOB [78-3] terminal 2 and [78-2] terminal 7.
6. Is voltage less than 4.8V?

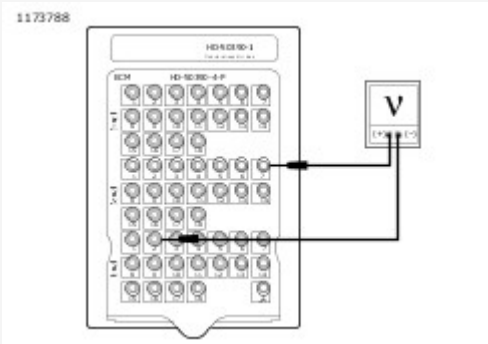

View interactive image

Figure 1.

a. **Yes.** **Go to Test 8.**
b. **No.** **Go to Test 2.**

2. TPS-1 Circuit Test

1. Turn IGN OFF.
2. Disconnect TCA [211].
3. Turn IGN ON.
4. Test voltage between [211B] terminal C and ground.
5. Is voltage between 4-5.25V?

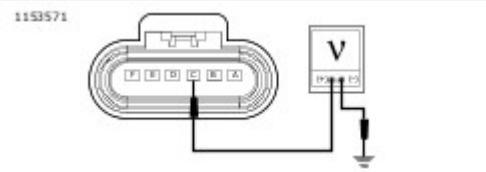

View interactive image

Figure 2.

a. **Yes.** Go to Test 3.
b. **No, less than 4V.** Repair open in (GN/V) wire.
c. **No, greater than 5.25V.** Repair short to voltage in (GN/V) wire.

3. Sensor Power Circuit Test

1. Test voltage between [211B] terminal D and ground.
2. Is voltage less than 5.25V?

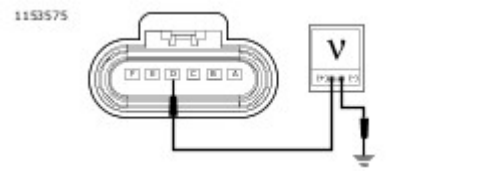

View interactive image

Figure 3.

a. **Yes.** Go to Test 4.
b. **No.** Repair short to voltage in (R/W) wire.

4. TCA Test

1. Jumper [211B] terminals C and B.
2. Test voltage between BOB [78-3] terminal 2 and [78-2] terminal 7.
3. See Figure 1. Is voltage greater than 1.0V?
   a. **Yes.** Go to Test 5.
   b. **No.** Replace TCA.

5. Sensor Ground Test

1. Turn IGN OFF.
2. Test resistance between [211B] terminal B and ground.
3. Is resistance less than 2 ohms?

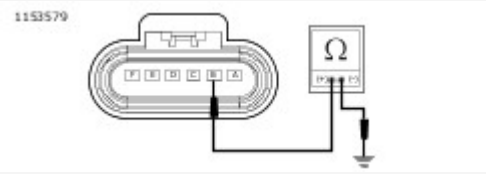

View interactive image

Figure 4.

a. **Yes.** Go to Test 6.
b. **No.** Go to Test 7.

6. Sensor Ground Circuit Shorted Test

1. Test continuity between [211B] terminals D and C.
2. Is continuity present?

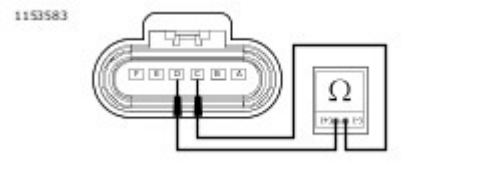

View interactive image

Figure 5.

a. **Yes.** Repair short between (GN/V) and (R/W) wires.
b. **No.** Replace ECM.

7. Sensor Ground Circuit Test

1. Disconnect ECM [78A-1], [78A-2] and [78A-3].
2. Test resistance between [211B] terminal B and BOB [78-2] terminal 7.
3. Is resistance less than 0.5 ohms?

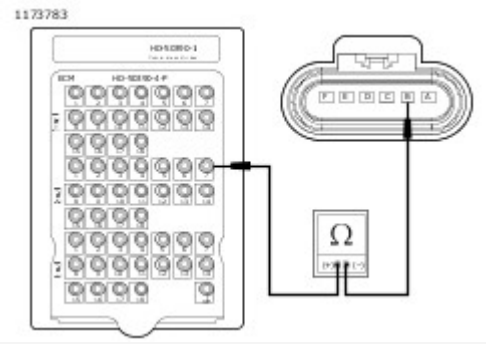

View interactive image

View interactive image

Figure 6.

a. **Yes.** Replace ECM.
b. **No.** Repair open in (BK/W) wire.

8. TPS-1 Circuit Function Test

1. Disconnect TCA [211].
2. Test voltage between [211B] terminal C and ground.
3. See Figure 2. Is voltage between 2-5.25V?
   a. **Yes.** Go to Test 9.
   b. **No. Less than 2V.** Repair open in (GN/V) wire.
   c. **No. Greater than 5.25V.** Repair short to voltage on (GN/V) wire.

9. Sensor Power Short to Voltage Test

1. Test voltage between [211B] terminal D and ground.
2. See Figure 3. Is voltage less than 5.25V?
   a. **Yes.** Go to Test 10.
   b. **No.** Repair short to voltage on (R/W) wire.

10. Ground Circuit Open Test

1. Turn IGN OFF.
2. Disconnect ECM [78A-1], [78A-2] and [78A-3].
3. Test resistance between [211B] terminal B and BOB [78-2] terminal 7.
4. See Figure 6. Is resistance less than 0.5 ohms?
   a. **Yes.** Go to Test 11.
   b. **No.** Repair open in (BK/W) wire.

11. TPS-1 Continuity Test

1. Test resistance between [211B] terminal C and BOB [78-3] terminal 2.
2. Is resistance less than 0.5 ohms?

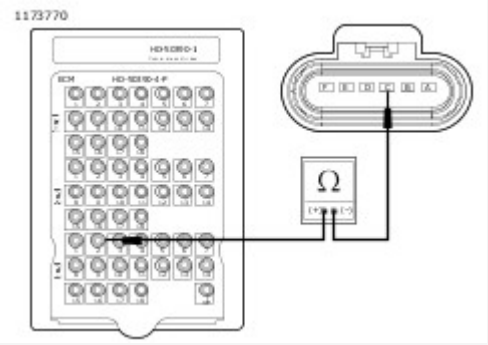

View interactive image

View interactive image

Figure 7.

a. **Yes.** Replace TCA.
b. **No.** Repair open in (GN/V) wire.

Special Tools

Description	Part Number	Qty.
TEST CONNECTOR KIT	HD-41404	1
BREAKOUT BOX	HD-50390-1	1
ECM CABLE	HD-50390-4	1
ECM OVERLAY	HD-50390-4-P	1

Table 1. DTC P0220 Diagnostic Faults

POSSIBLE CAUSES
Open in sensor power circuit
Short to voltage in sensor power circuit
Open in TPS-2 circuit
Short to voltage in TPS-2 circuit
Short to ground in TPS-2 circuit
Open in sensor ground circuit

1. Sensor Power-1 Circuit Test

1. Turn IGN OFF.
2. Connect **BREAKOUT BOX (Part Number:HD-50390-1)** and **ECM CABLE (Part Number:HD-50390-4)** to wiring harness [78B-1], [78B-2] and [78B-3], leaving ECM [78A-1], [78A-2] and [78A-3] disconnected. See **Initial Diagnostics → DIAGNOSTIC TOOLS**.
3. Verify **ECM OVERLAY (Part Number:HD-50390-4-P)** is in position on BOB.
4. Disconnect TCA [211].
5. Using **TEST CONNECTOR KIT (Part Number:HD-41404)**, test resistance between BOB [78-2] terminal 9 and [211B] terminal D
6. Is resistance less than 0.5 ohms?

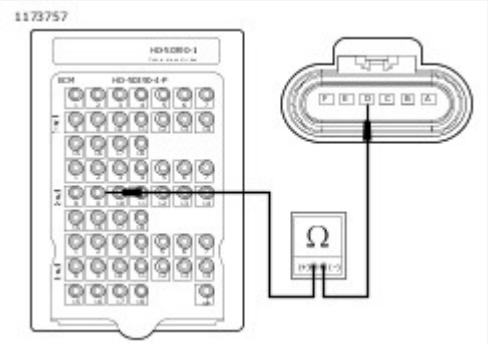

View interactive image

Figure 1.

a. **Yes.** Go to Test 2.
b. **No.** Repair open in (R/W) wire.

2. Sensor Power-1 Short to Voltage Test

1. Turn IGN ON.
2. Test voltage between BOB [78-2] terminal 9 and ground.
3. Is battery voltage present?

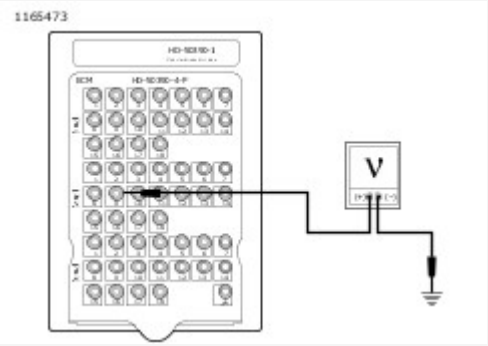

View interactive image

Figure 2.

a. **Yes.** Repair short to voltage (R/W) wire.
b. **No.** Go to Test 3.

3. TPS-2 Circuit Shorted Test

1. Turn IGN OFF.
2. Test continuity between BOB [78-2] terminals 9 and 15.
3. Is continuity present?

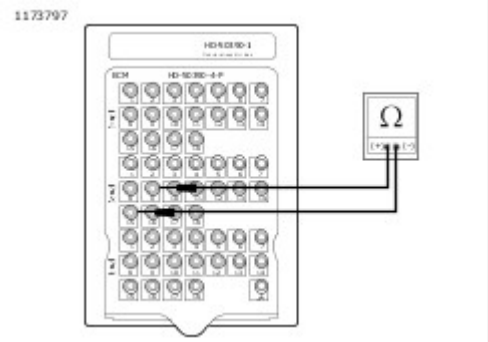

View interactive image

Figure 3.

a. **Yes.** Repair short between (R/W) and (GY/V) wires.
b. **No.** Go to Test 4.

4. TPS-2 Circuit Resistance Test

1. Test resistance between BOB [78-2] terminal 15 and [211B] terminal E.
2. Is resistance less than 0.5 ohms?

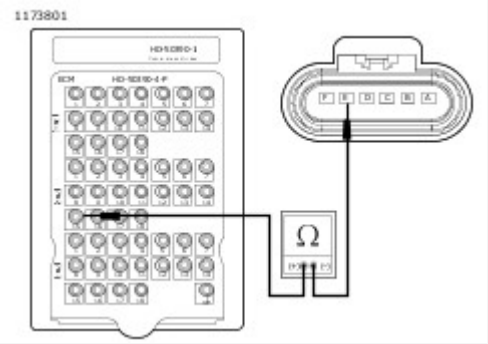

View interactive image

Figure 4.

a. **Yes.** Go to Test 5.
b. **No.** Repair open in (GY/V) wire.

5. TPS-1 Circuit Short to Ground Test

1. Test continuity between BOB [78-2] terminal 15 and ground.
2. Is continuity present?

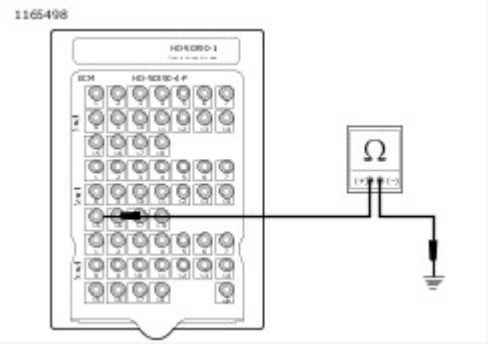

View interactive image

Figure 5.

a. **Yes.** Repair short to ground on (GY/V) wire.
b. **No.** Go to Test 6.

6. TPS-1 Circuit Short to Voltage Test

1. Turn IGN ON.
2. Test voltage between BOB [78-2] terminal 15 and ground.
3. Is voltage present?

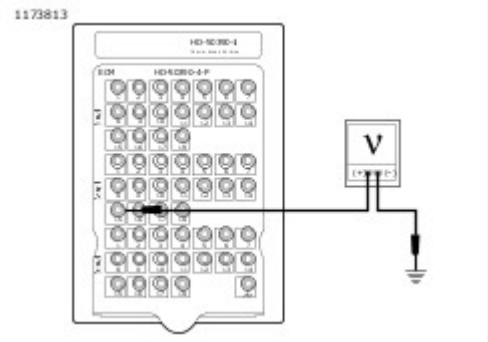

View interactive image

Figure 6.

a. **Yes.** Repair short to voltage on (GY/V) wire.
b. **No.** Go to Test 7.

7. Sensor Ground Resistance Test

1. Turn IGN OFF.
2. Test resistance between BOB [78-2] terminal 7 and [211B] terminal B.
3. Is resistance less than 0.5 ohms?

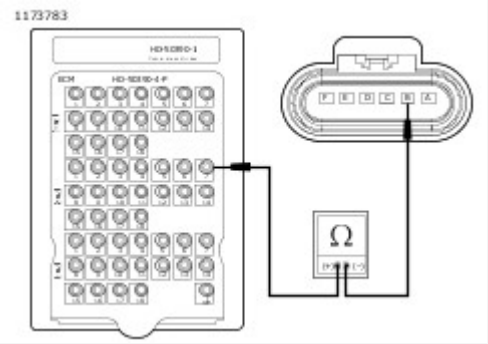

View interactive image

Figure 7.

a. **Yes.** Go to Test 8.
b. **No.** Repair open in (BK/W) wire.

8. TCA Test

1. Connect [78A-1], [78A-2] and [78A-3] to BOB.
2. Connect [211].
3. Turn IGN ON.
4. Test voltage between BOB [78-2] terminals 15 and 7.
5. Is voltage between 0.4-4.8V?

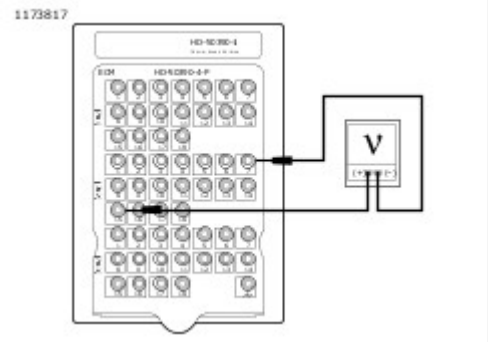

View interactive image

Figure 8.

a. **Yes.** Replace ECM.
b. **No.** Replace TCA.

Special Tools

Description	Part Number	Qty.
TEST CONNECTOR KIT	HD-41404	1
BREAKOUT BOX	HD-50390-1	1
ECM CABLE	HD-50390-4	1
ECM OVERLAY	HD-50390-4-P	1

Table 1. DTC P0222 Diagnostic Faults

POSSIBLE CAUSES
Open in sensor power circuit
Short to ground in TPS-2 circuit

1. TCA Sensor-2 Circuit Test

1. Turn IGN OFF.
2. Connect **BREAKOUT BOX (Part Number:HD-50390-1)** and **ECM CABLE (Part Number:HD-50390-4)** between wiring harness [78B-1], [78B-2] and [78B-3], and ECM [78A-1], [78A-2] and [78A-3]. See **Initial Diagnostics → DIAGNOSTIC TOOLS**.
3. Verify **ECM OVERLAY (Part Number:HD-50390-4-P)** is in position on BOB.
4. Turn IGN ON.
5. Using **TEST CONNECTOR KIT (Part Number:HD-41404)**, test voltage between BOB [78-2] terminals 15 and 7.
6. Is voltage greater than 0.2V?

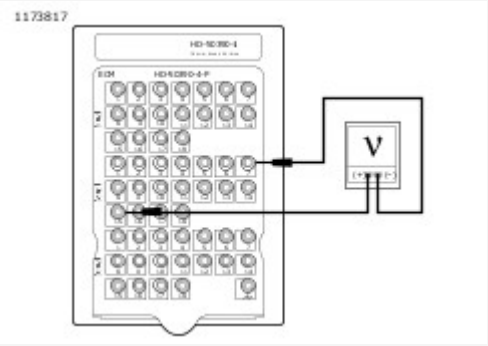

View interactive image

Figure 1.

a. **Yes.** **Go to Test 2.**
b. **No.** **Go to Test 4.**

2. TCA Sensor-2 Circuit Short to Ground Test

1. Turn IGN OFF.
2. Disconnect [78A-1], [78A-2] and [78A-3] from BOB.
3. Disconnect TCA [211].
4. Test continuity between BOB [78-2] terminal 15 and ground.
5. Is continuity present?

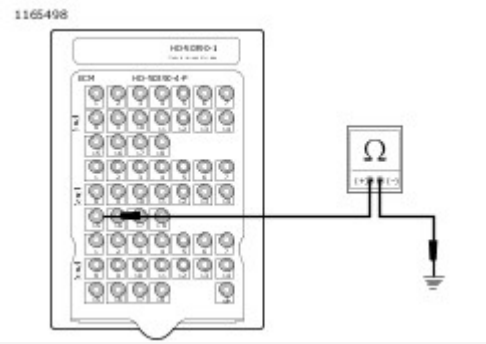

View interactive image

Figure 2.

a. **Yes.** Repair short to ground in (GY/V) wire.
b. **No.** [Go to Test 3.]

3. TCA Power-1 Circuit Open Test

1. Test resistance between BOB [78-2] terminal 9 and [211B] terminal D.
2. Is resistance less than 0.5 ohms?

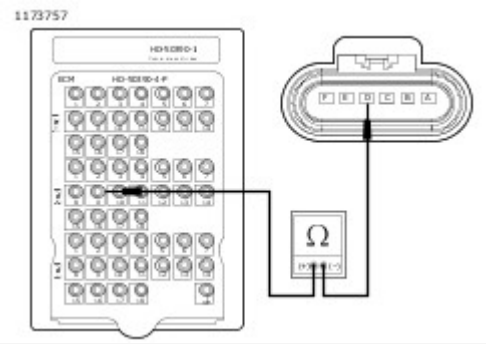

View interactive image

Figure 3.

a. **Yes.** Replace TCA.
b. **No.** Repair open in (R/W) wire.

4. TCA 5V Reference Circuit Short to Ground Test

1. Turn IGN OFF.
2. Disconnect [211].
3. Turn IGN ON.
4. Test voltage between BOB [78-2] terminal 9 and ground.
5. Is voltage greater than 4V?

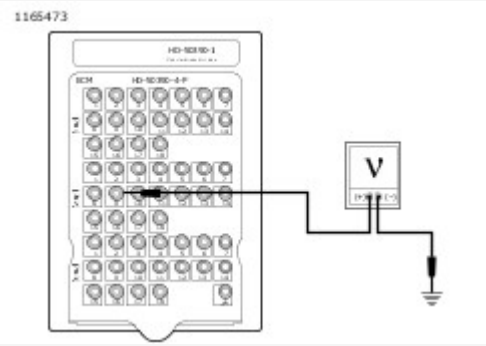

View interactive image

Figure 4.

a. **Yes.** Replace TCA.
b. **No.** Go to Test 5.

5. ECM Test

1. Turn IGN OFF.
2. Disconnect [78A] from BOB.
3. Test resistance between BOB [78-2] terminal 15 and ground.
4. See Figure 2. Is resistance greater than 0.5 ohms?
   a. **Yes.** Repair short to ground in (GY/V) wire.
   b. **No.** Replace ECM.

Special Tools

Description	Part Number	Qty.
TEST CONNECTOR KIT	HD-41404	1
BREAKOUT BOX	HD-50390-1	1
ECM CABLE	HD-50390-4	1
ECM OVERLAY	HD-50390-4-P	1

Table 1. DTC P0223 Diagnostic Faults

POSSIBLE CAUSES
Open in sensor power circuit
Short to voltage in sensor power circuit
Open in TPS-2 circuit
Short to voltage in TPS-2 circuit
Short to ground in TPS-2 circuit
Open in sensor ground circuit

1. TPS-2 Voltage Test

1. Turn IGN OFF.
2. Connect **BREAKOUT BOX (Part Number:HD-50390-1)** and **ECM CABLE (Part Number:HD-50390-4)** to wiring harness [78B-1], [78B-2] and [78B-3], and ECM [78A-1], [78A-2] and [78A-3]. See **Initial Diagnostics → DIAGNOSTIC TOOLS**.
3. Verify **ECM OVERLAY (Part Number:HD-50390-4-P)** is in position on BOB.
4. Turn IGN ON.
5. Using **TEST CONNECTOR KIT (Part Number:HD-41404)**, test voltage between BOB [78-2] terminals 15 and 7.
6. Is voltage less than 4.8V?

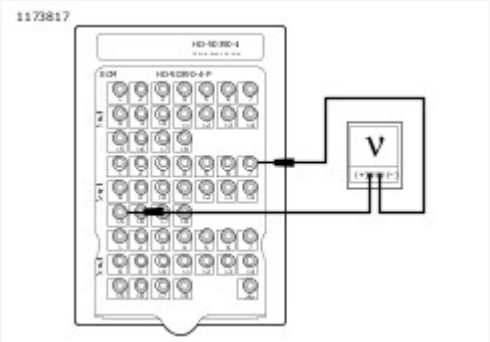

View interactive image

Figure 1.

a. **Yes.** Go to Test 7.
b. **No.** Go to Test 2.

2. TPS-2 Circuit Test

1. Disconnect TCA [211].
2. Test voltage between [211B] terminal E and ground.
3. Is voltage less than 0.2V?

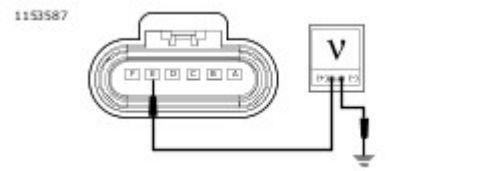

View interactive image

Figure 2.

a. **Yes.** Go to Test 3.
b. **No.** Go to Test 5.

3. Sensor Power Circuit Test

1. Test voltage between [211B] terminal D and ground.
2. Is voltage less than 5.25V?

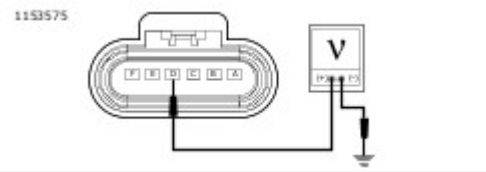

View interactive image

Figure 3.

a. **Yes.** Go to Test 4.
b. **No.** Repair short to voltage in (R/W) wire.

4. Sensor Ground Test

1. Turn IGN OFF.
2. Test resistance between [211B] terminal B and ground.
3. Is resistance less than 2 ohms?

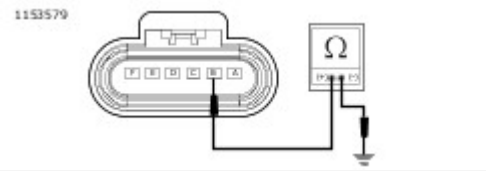

View interactive image

Figure 4.

a. **Yes.** Replace TCA.
b. **No.** Go to Test 6.

5. Shorted 5V Circuit Test

1. Disconnect [78A-1], [78A-2] and [78A-3].
2. Test continuity between [211B] terminals E and D.
3. Is continuity present?

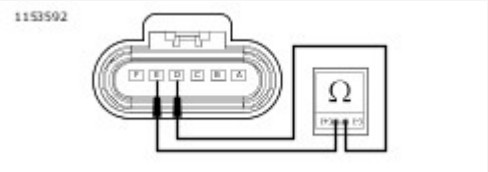

View interactive image

Figure 5.

a. **Yes.** Repair short between (GY/V) and (R/W) wires.
b. **No.** Replace ECM.

6. Sensor Ground Circuit Test

1. Test resistance between [211B] terminal B and BOB [78-2] terminal 7.
2. Is resistance less than 0.5 ohms?

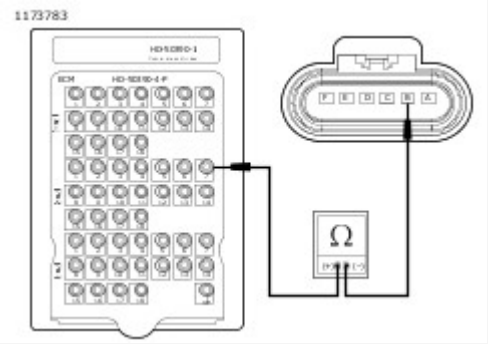

View interactive image

Figure 6.

a. **Yes.** Replace ECM.
b. **No.** Repair open in (BK/W) wire.

7. TPS-2 Circuit Test

1. Disconnect [78A-1], [78A-2] and [78A-3].
2. Disconnect TCA [211].
3. Turn IGN ON.
4. Test voltage between [211B] terminal E and ground.
5. See Figure 2. Is voltage less than 1.0V?
    a. **Yes.** Go to Test 8.
    b. **No.** Repair short to voltage on (GY/V) wire.

8. Sensor Short to Voltage Test

1. Test voltage between [211B] terminal D and ground.
2. See Figure 3. Is voltage less than 5.25V?
    a. **Yes.** Go to Test 9.
    b. **No.** Repair short to voltage on (R/W) wire.

9. Ground Circuit Open Test

1. Turn IGN OFF.
2. Disconnect [78A-1], [78A-2] and [78A-3].
3. Test resistance between [211B] terminal B and BOB [78-2] terminal 7.
4. See Figure 6. Is resistance less than 0.5 ohms?
    a. **Yes.** Replace TCA.
    b. **No.** Repair open in (BK/W) wire.

See Figure 1. The ECM supplies and monitors a voltage signal from [78-2] terminal 8 to one side of the ET sensor. The other side of the ET sensor is connected to a common sensor ground. The ground is also connected to the ECM [78-2] terminal 7.

The ET sensor is a thermistor device. At a specific temperature it will have a specific resistance across its terminals. As this resistance varies, so does the voltage on ECM [78-2] terminal 8.

- At high temperatures, the resistance of the sensor is very low. This lowers the signal voltage on ECM [78-2] terminal 8.
- At low temperatures, the resistance is very high. This allows the voltage to rise close to 5V.

The ECM monitors this voltage to compensate for various operating conditions.

Table 1. Code Description

DTC	DESCRIPTION
P0117	ET sensor shorted low
P0118	ET sensor high/open

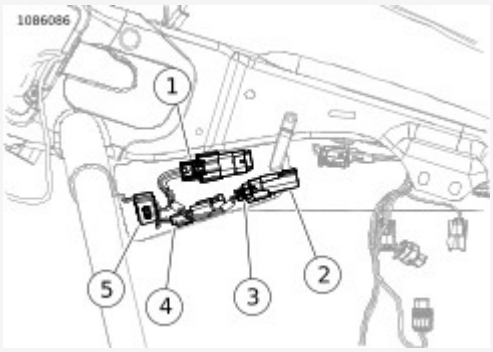

View interactive image

1	USB caddy interconnect [329]
2	USB [264]
3	Fuel pump [141]
4	ET sensor [90]

Figure 1. Under Fuel Tank Left Side

Diagnostic Tips

Once the engine is started, the temperature should rise steadily to operating temperature.

An intermittent may be caused by a poor connection, rubbed through wire insulation or an inoperative wire inside the insulation.

Check the following conditions:

- **Poor connection:** Inspect ECM harness connector [78-1], [78-2] and [78-3] for backed out terminals, improper mating, inoperative locks, improperly formed or damaged terminals, poor terminal-to-wire connection and damaged harness.
- **Perform** Initial Diagnostics → DIAGNOSTICS AND TROUBLESHOOTING → Wiggle Test **to locate intermittents:** If connections and harness check out OK, use a multimeter to check the engine temperature reading while moving related

connectors and wiring harness. If the failure is induced, the engine temperature display will change.

- **Shifted sensor resistance value:** Measure ET and IAT sensor temperatures with a cool engine. The sensor temperatures should be within 5.6 °C (10 °F) of each other. If the two sensors are not within the specified range replace the inaccurate sensor.

Connector Information

For additional information about the connectors in the following diagram(s) and diagnostic procedure(s), see **Wiring → Wire Harness Connectors → General**.

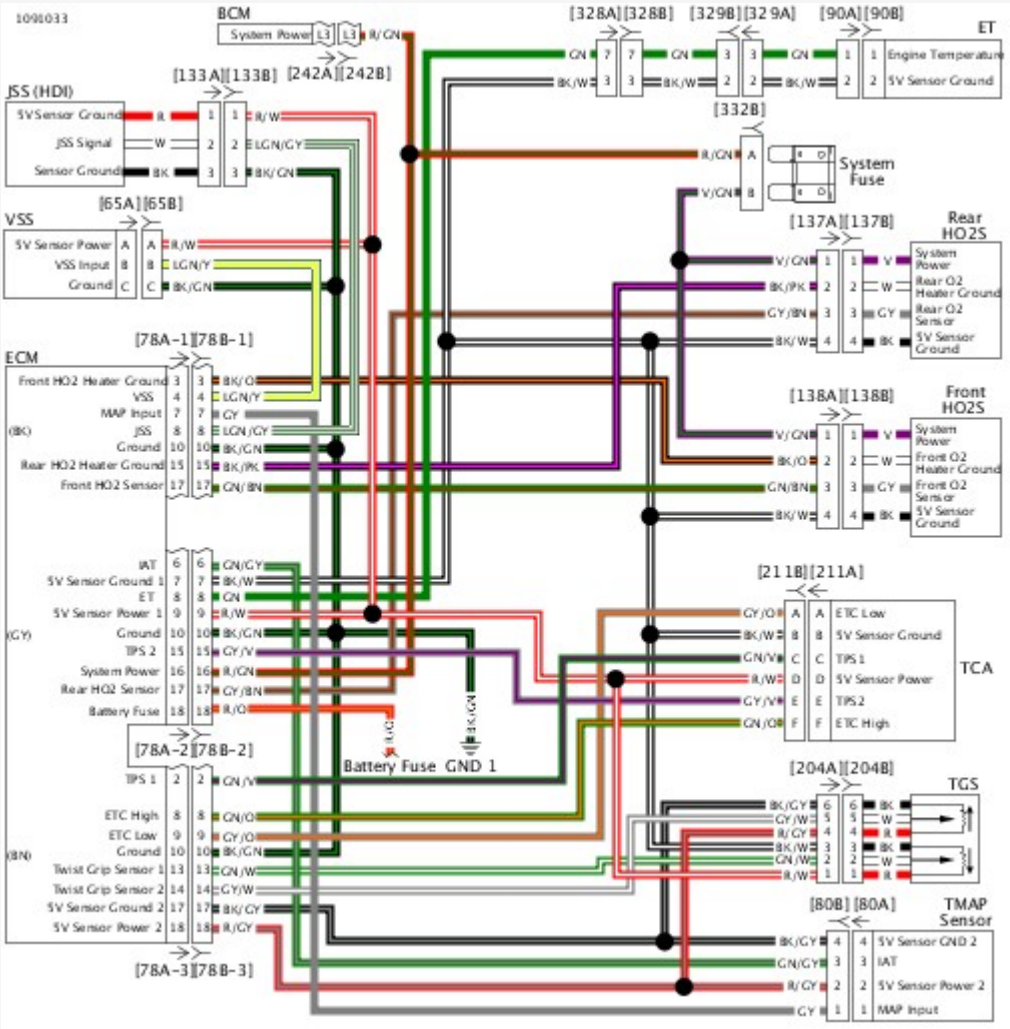

View interactive image

Figure 2. Sensor Circuit

Special Tools

Description	Part Number	Qty.
TEST CONNECTOR KIT	HD-41404	1
BREAKOUT BOX	HD-50390-1	1
ECM CABLE	HD-50390-4	1
ECM OVERLAY	HD-50390-4-P	1

Table 1. DTC P0117 Diagnostic Faults

POSSIBLE CAUSES
ET sensor malfunction
Short to ground in 5V reference circuit

1. ET Sensor Test

NOTE

Vehicle and sensor must be at ambient room temperature before starting diagnostic test.

1. Turn IGN OFF.
2. Disconnect ET sensor [90].
3. Using **TEST CONNECTOR KIT (Part Number:HD-41404)**, test resistance between [90B] terminals 1 and 2.
4. Is resistance between 900-10,000 ohms?

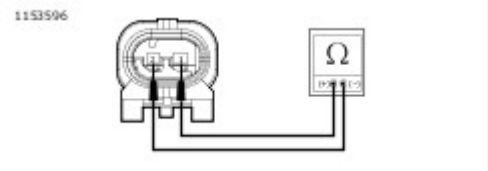

View interactive image

Figure 1.

a. **Yes.** **Go to Test 2.**
b. **No.** Replace ET sensor.

2. ET Sensor Signal Wire Shorted to Ground Test

1. Test resistance between [90A] terminal 1 (GN) wire and ground.
2. Is resistance less than 1 ohm?

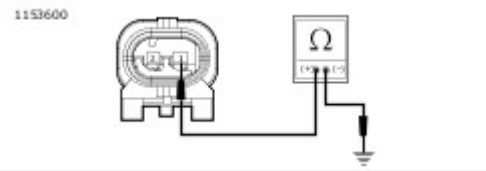

View interactive image

Figure 2.

a. **Yes.** Repair short to ground in (GN) wire.
b. **No.** Go to Test 3.

3. ET Sensor Signal Wire Shorted to Sensor Ground Test

1. Connect BREAKOUT BOX (Part Number:HD-50390-1) and ECM CABLE (Part Number:HD-50390-4) to wiring harness [78B-1], [78B-2] and [78B-3], leaving ECM [78A-1], [78A-2] and [78A-3] disconnected. See Initial Diagnostics → DIAGNOSTIC TOOLS.
2. Verify ECM OVERLAY (Part Number:HD-50390-4-P) is in position on BOB.
3. Test continuity between BOB [78-2] terminals 8 and 7.
4. Is continuity present?

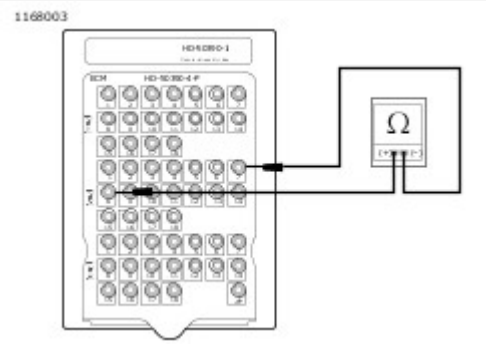

View interactive image

Figure 3.

a. **Yes.** Repair short between [90A] terminals 1 (GN) wire and 2 (BK/W) wire.
b. **No.** Replace ECM.

Special Tools

Description	Part Number	Qty.
TEST CONNECTOR KIT	HD-41404	1
BREAKOUT BOX	HD-50390-1	1
ECM CABLE	HD-50390-4	1
ECM OVERLAY	HD-50390-4-P	1

Table 1. DTC P0118 Diagnostic Faults

POSSIBLE CAUSES
ET sensor malfunction
Open or short to voltage in 5V reference circuit

1. ET Signal Voltage Test

1. Turn IGN OFF.
2. Disconnect ET sensor [90].
3. Using **TEST CONNECTOR KIT (Part Number:HD-41404)**, test voltage between [90A] terminal 1 (GN) wire and ground.
4. Turn IGN ON.
5. Is voltage greater than 6V?

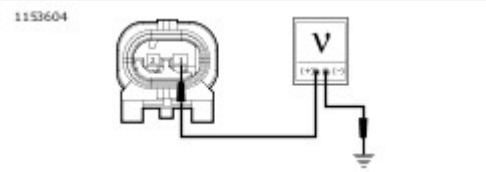

View interactive image

Figure 1.

a. **Yes.** Repair short to voltage on (GN) wire.
b. **No.** **Go to Test 2.**

2. ET Sensor Signal Wire Open Test

1. Turn IGN OFF.
2. Connect **BREAKOUT BOX (Part Number:HD-50390-1)** and **ECM CABLE (Part Number:HD-50390-4)** to wiring harness [78B-1], [78B-2] and [78B-3], leaving ECM [78A-1], [78A-2] and [78A-3] disconnected. See **Initial Diagnostics → DIAGNOSTIC TOOLS**.
3. Verify **ECM OVERLAY (Part Number:HD-50390-4-P)** is in position on BOB.
4. Test resistance between [90A] terminal 1 (GN) wire and BOB [78-2] terminal 8.
5. Is resistance less than 0.5 ohms?

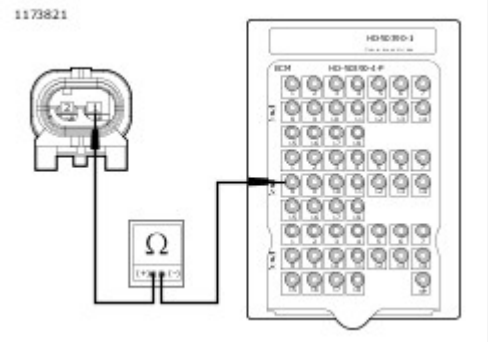

View interactive image

Figure 2.

a. **Yes.** Go to Test 3.
b. **No.** Repair open in (GN) wire.

3. ET Sensor Open Ground Wire Test

1. Test resistance between [90A] terminal 2 (BK/W) wire and BOB [78-2] terminal 7.
2. Is resistance less than 0.5 ohms?

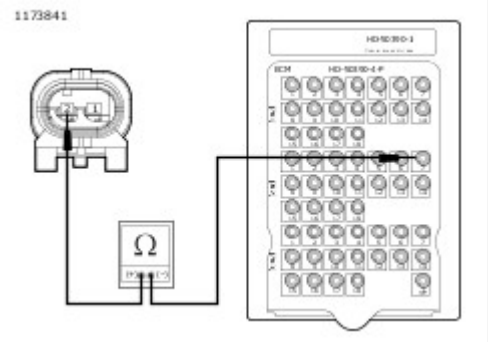

View interactive image

Figure 3.

a. **Yes.** Go to Test 4.
b. **No.** Repair open in (BK/W) wire.

4. ET Sensor Signal Wire Shorted to Sensor Power Test

1. Test continuity between BOB [78-2] terminals 8 and 9.
2. Is continuity present?

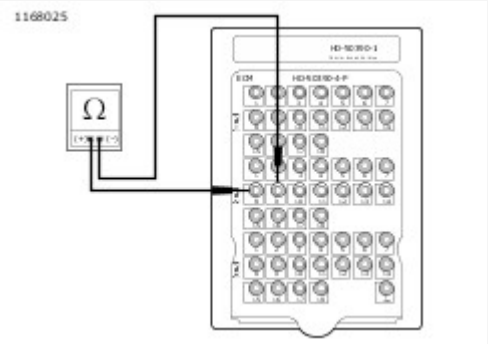

View interactive image

Figure 4.

a. **Yes.** Repair short between (GN) and (R/W) wires.
b. **No.** [Go to Test 5.]

5. ET Sensor Test

1. Connect [90].
2. Test continuity between BOB [78-2] terminals 8 and 7.
3. Is continuity present?

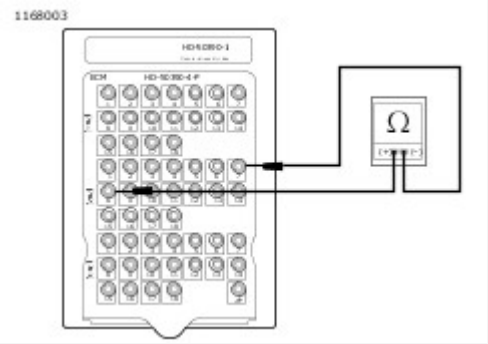

View interactive image

Figure 5.

a. **Yes.** Replace ECM.
b. **No.** Replace ET sensor.

The HO2S provides a signal to the ECM which indicates whether the engine is running rich or lean.

- A P0131 (front) or P0151 (rear) is set when the ECM detects an excessively lean condition for a specified length of time. DTCs may also set if HO2S fails.
- A P0132 (front) or P0152 (rear) is set when the ECM detects an excessively rich condition for a specified length of time. This can be caused by oil contamination or fuel injector malfunctions. DTCs may also set if HO2S fails.
- A P0134 (front) or a P0154 (rear) is set when the sensor circuit is open or too cold to respond.
- When the air/fuel mixture is ideal, approximately 14.6 parts air to 1 part fuel, the voltage will be approximately 0.45V when measuring across the sensor.

Table 1. Code Description

DTC	DESCRIPTION
P0031	Front HO2S low/open
P0032	Front HO2S shorted high
P0051	Rear HO2S low/open
P0052	Rear HO2S shorted high
P0131	O2 sensor low/engine lean (front)
P0132	Engine running rich (front)
P0134	O2 sensor high/open (front)
P0151	O2 sensor low/engine lean (rear)
P0152	Engine running rich (rear)
P0154	O2 sensor high/open (rear)

The heater portion of the HO2S is powered by the BCM. The front and rear HO2S heaters have separate control circuits monitored by the ECM.

Diagnostic Tips

The ECM requires a HO2S fault be present for three drive cycles before it sets a code. After clearing codes, operate the vehicle for three drive cycles before checking for codes.

The heater circuits in the HO2S are powered from the system power circuit. This circuit voltage is supplied by the BCM through the system power fuse. Any short causing the fuse to open will cause the ECM to set DTC P0031 and P0051. If these codes are present with an open fuse, the fault is a short to ground somewhere in the circuit or the components.

The multimeter displays the signal from the HO2S in Volts. This voltage will have an average value tending towards lean, rich or ideal value depending on operating temperature of the engine, engine speed and throttle position. An open/short to voltage or short to ground in the (GN/BN) wire (front) and (GY/BN) wire (rear) will cause the engine to run rich (short to ground) or lean (short to voltage) until the fault is detected. Once fault is detected, vehicle will run in open loop.

Check for the following conditions:

- **System fuse:** Any short causing the fuse to open will cause the ECM to set DTC P0031 and P0051.
- **Poor connection:** Inspect the ECM [78-1], [78-2] and [78-3], fuel injector [84, 85] and HO2S [137, 138] connectors for backed out terminals, improper mating, inoperative locks, improperly formed or damaged terminals, poor terminal-to-wire connection and damaged harnesses.

- **Dirty/stuck open injectors:** The vehicle may run lean (dirty/clogged injectors) or rich (stuck open injectors) if there are injector problems. This could also cause poor fuel economy and performance.
- **Leaking injectors:** This causes fuel imbalance and poor idle quality due to different air/fuel ratios in each cylinder. To check for leaky injectors, first remove the air box and air filter. Then, with the throttle wide open, turn IGN ON for 2 seconds and then OFF for 2 seconds five consecutive times. Replace the fuel injector if there is any evidence of raw fuel in the bores. See Fuel Injectors in the service manual.
- **Loose HO2S:** If an HO2S is loose, engine performance may be affected. This could also show up as a slow changing HO2S voltage.
- **Loose/leaking exhaust:** This can cause a poor ground connection for the sensor or allow fresh air into the exhaust system. If fresh air enters exhaust system, the HO2S will read a lean condition, causing the system to go rich.
- **Engine misfire:** See [Engine Management → Misfire at Idle or Under Load](#).
- **Intake leaks:** See the service manual.

Connector Information

For additional information about the connectors in the following diagram(s) and diagnostic procedure(s), see [Wiring → Wire Harness Connectors → General](#).

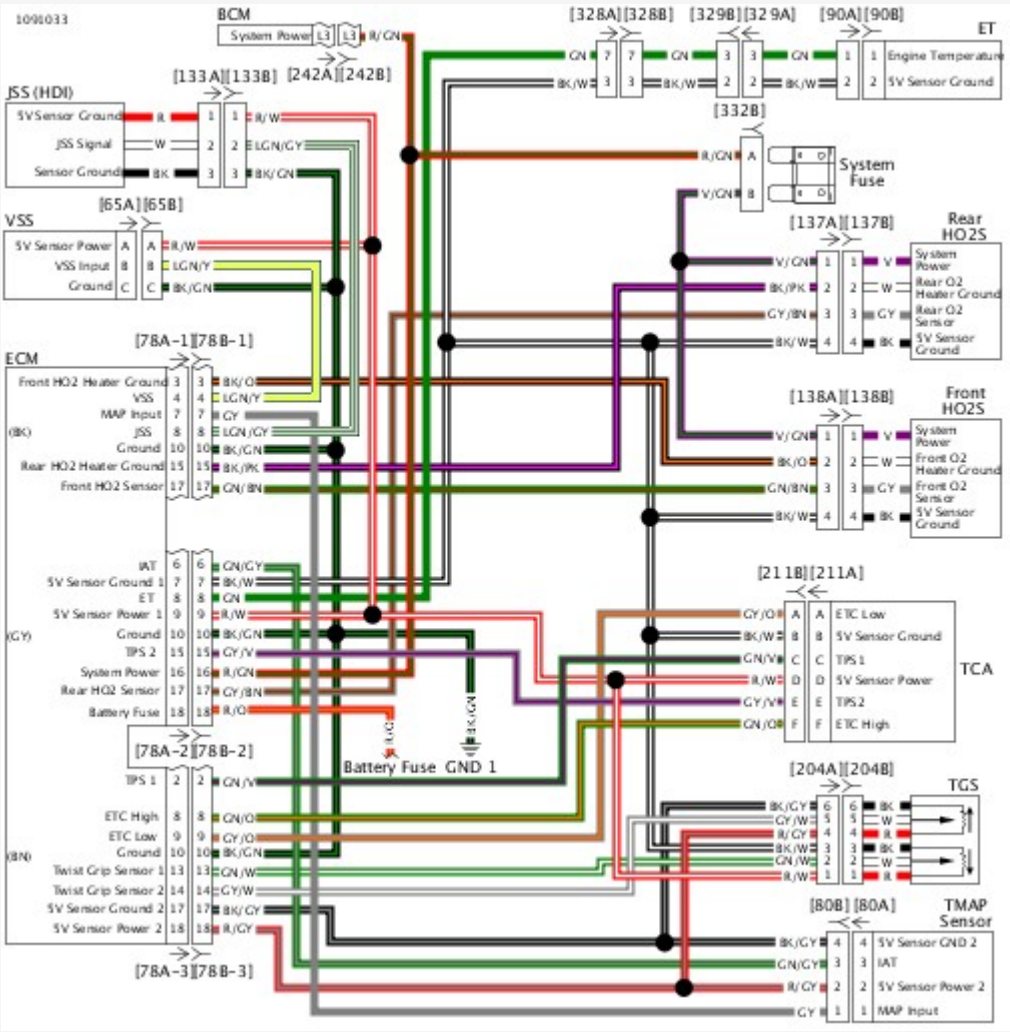

View interactive image

Figure 1. Sensor Circuit

Special Tools

Description	Part Number	Qty.
TEST CONNECTOR KIT	HD-41404	1
BREAKOUT BOX	HD-50390-1	1
ECM CABLE	HD-50390-4	1
ECM OVERLAY	HD-50390-4-P	1

Table 1. DTC P0031 Diagnostic Faults

POSSIBLE CAUSES
Open or short to ground on front HO2S circuit
Open in sensor power circuit

1. Front HO2S Voltage Test

1. Turn IGN OFF.
2. Disconnect front HO2S [138].
3. Turn IGN ON.
4. Using **TEST CONNECTOR KIT (Part Number:HD-41404)**, test voltage between [138A] terminal 1 (V/GN) wire and ground.
5. Is battery voltage present?

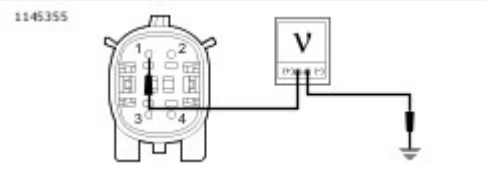

View interactive image

Figure 1.

a. **Yes.** **Go to Test 2.**
b. **No.** Repair open in (V/GN) wire.

2. Open Ground Test

1. Turn IGN OFF.
2. Connect **BREAKOUT BOX (Part Number:HD-50390-1)** and **ECM CABLE (Part Number:HD-50390-4)** to wiring harness [78B-1], [78B-2] and [78B-3], leaving ECM [78A-1], [78A-2] and [78A-3] disconnected. See **Initial Diagnostics → DIAGNOSTIC TOOLS**.
3. Verify **ECM OVERLAY (Part Number:HD-50390-4-P)** is in position on BOB.
4. Test resistance between BOB [78-1] terminal 3 and [138A] terminal 2 (BK/O) wire.
5. Is resistance less than 0.5 ohms?

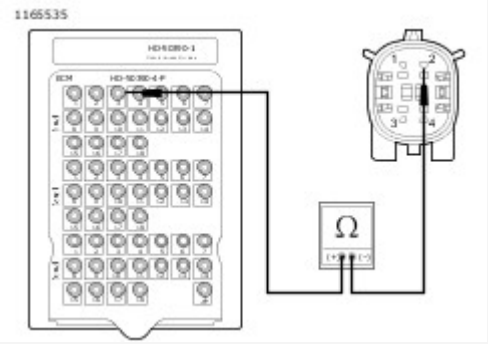

View interactive image

Figure 2.

a. **Yes.** [Go to Test 3.]
b. **No.** Repair open in (BK/O) wire.

3. Short to Ground Test

1. Test continuity between BOB [78-1] terminal 3 and ground.
2. Is continuity present?

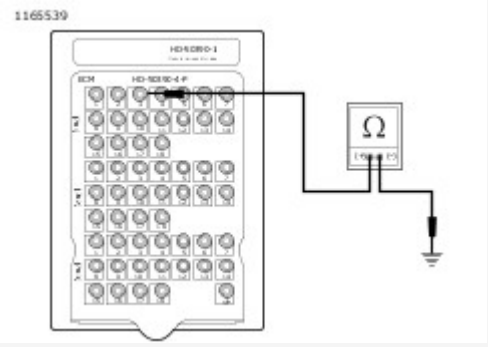

View interactive image

Figure 3.

a. **Yes.** Repair short to ground in (BK/O) wire.
b. **No.** [Go to Test 4.]

4. Resistance Test

1. Test resistance between [138B] terminals 1 (V) wire and 2 (W) wire.
2. Is resistance between 13.5-35 ohms?

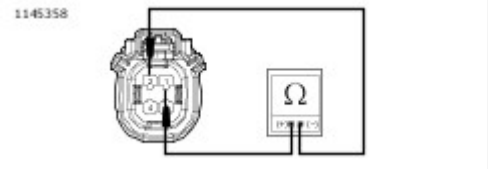

View interactive image

View interactive image

Figure 4.

a. **Yes.** Replace ECM.
b. **No.** Replace front HO2S.

Special Tools

Description	Part Number	Qty.
BREAKOUT BOX	HD-50390-1	1
ECM CABLE	HD-50390-4	1
ECM OVERLAY	HD-50390-4-P	1

Table 1. DTC P0032 Diagnostic Faults

POSSIBLE CAUSES
Front HO2S circuit shorted to 12V

1. Front HO2S Shorted to Voltage Test

1. Turn IGN OFF.
2. Connect **BREAKOUT BOX (Part Number:HD-50390-1)** and **ECM CABLE (Part Number:HD-50390-4)** to wiring harness [78B-1], [78B-2] and [78B-3], leaving ECM [78A-1], [78A-2] and [78A-3] disconnected. See **Initial Diagnostics → DIAGNOSTIC TOOLS**.
3. Verify **ECM OVERLAY (Part Number:HD-50390-4-P)** is in position on BOB.
4. Turn IGN ON.
5. Test voltage between BOB [78-1] terminal 3 and ground.
6. Is voltage present?

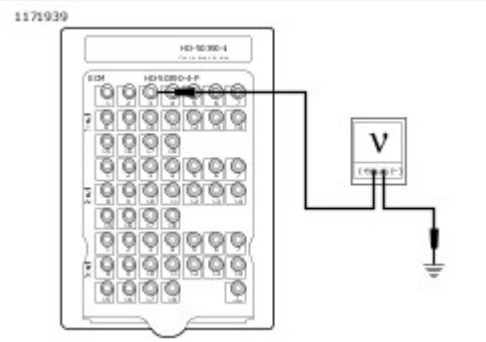

View interactive image

Figure 1.

a. **Yes.** Repair short to voltage on (BK/O) wire.
b. **No.** **Go to Test 2.**

2. Resistance Test

1. Turn IGN OFF.
2. Disconnect front HO2S [138].
3. Test resistance between [138B] terminals 1 (V) wire and 2 (W) wire.
4. Is resistance between 13.5-35 ohms?

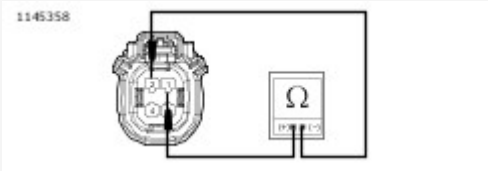

View interactive image

Figure 2.

a. **Yes.** Replace ECM.
b. **No.** Replace front HO2S.

Special Tools

Description	Part Number	Qty.
TEST CONNECTOR KIT	HD-41404	1
BREAKOUT BOX	HD-50390-1	1
ECM CABLE	HD-50390-4	1
ECM OVERLAY	HD-50390-4-P	1

Table 1. DTC P0051 Diagnostic Faults

POSSIBLE CAUSES
Open or short to ground on rear HO2S circuit
Open in sensor power circuit

1. Rear HO2S Voltage Test

1. Turn IGN OFF.
2. Disconnect rear HO2S [137].
3. Turn IGN ON.
4. Using **TEST CONNECTOR KIT (Part Number:HD-41404)**, test voltage between [137A] terminal 1 (V/GN) wire and ground.
5. Is battery voltage present?

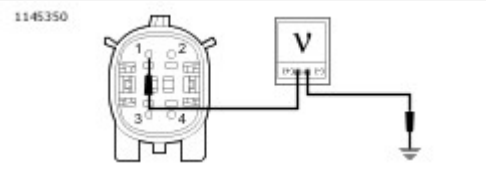

View interactive image

Figure 1.

a. **Yes.** **Go to Test 2.**
b. **No.** Repair open in (V/GN) wire.

2. Open Ground Test

1. Turn IGN OFF.
2. Connect **BREAKOUT BOX (Part Number:HD-50390-1)** and **ECM CABLE (Part Number:HD-50390-4)** to wiring harness [78B-1], [78B-2] and [78B-3], leaving ECM [78A-1], [78A-2] and [78A-3] disconnected. See **Initial Diagnostics → DIAGNOSTIC TOOLS**.
3. Verify **ECM OVERLAY (Part Number:HD-50390-4-P)** is in position on BOB.
4. Test resistance between BOB [78-1] terminal 15 and [137A] terminal 2 (BK/PK) wire.
5. Is resistance less than 0.5 ohms?

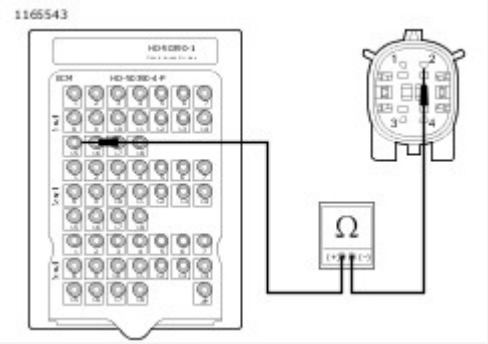

View interactive image

Figure 2.

a. **Yes.** [Go to Test 3.]
b. **No.** Repair open in (BK/PK) wire.

3. Short to Ground Test

1. Test continuity between BOB [78-1] terminal 15 and ground.
2. Is continuity present?

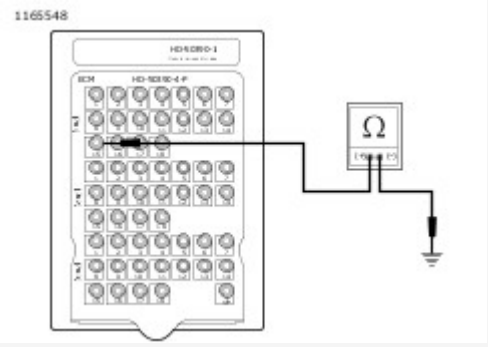

View interactive image

Figure 3.

a. **Yes.** Repair short to ground in (BK/PK) wire.
b. **No.** [Go to Test 4.]

4. Resistance Test

1. Test resistance between [137B] terminals 1 (V) wire and 2 (W) wire.
2. Is resistance between 13.5-35 ohms?

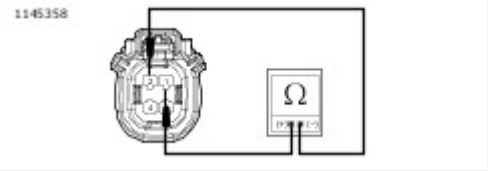

View interactive image

View interactive image

Figure 4.

a. **Yes.** Replace ECM.
b. **No.** Replace rear HO2S.

Special Tools

Description	Part Number	Qty.
TEST CONNECTOR KIT	HD-41404	1
BREAKOUT BOX	HD-50390-1	1
ECM CABLE	HD-50390-4	1
ECM OVERLAY	HD-50390-4-P	1

Table 1. DTC P0052 Diagnostic Faults

POSSIBLE CAUSES
Rear HO2S circuit shorted to voltage

1. Rear HO2S Shorted to Voltage Test

1. Turn IGN OFF.
2. Connect **BREAKOUT BOX (Part Number:HD-50390-1)** and **ECM CABLE (Part Number:HD-50390-4)** to wiring harness [78B-1], [78B-2] and [78B-3], leaving ECM [78A-1], [78A-2] and [78A-3] disconnected. See **Initial Diagnostics → DIAGNOSTIC TOOLS**.
3. Verify **ECM OVERLAY (Part Number:HD-50390-4-P)** is in position on BOB.
4. Turn IGN ON.
5. Using **TEST CONNECTOR KIT (Part Number:HD-41404)**, test voltage between BOB [78-1] terminal 15 and ground.
6. Is voltage present?

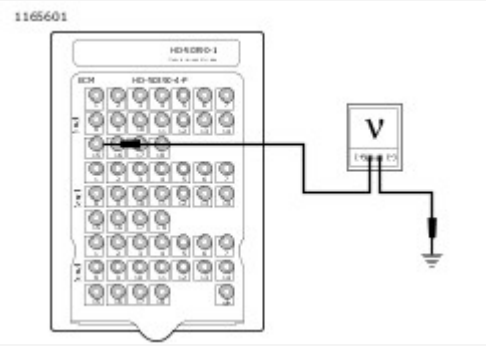

View interactive image

Figure 1.

a. **Yes.** Repair short to voltage on (BK/PK) wire.
b. **No.** **Go to Test 2.**

2. Resistance Test

1. Turn IGN OFF.
2. Test resistance between [137B] terminals 1 (V) wire and 2 (W) wire.

3. Is resistance between 13.5-35 ohms?

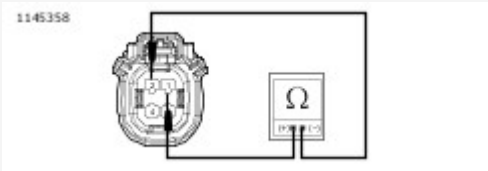

View interactive image

Figure 2.

a. **Yes.** Replace ECM.
b. **No.** Replace front HO2S.

Special Tools

Description	Part Number	Qty.
TEST CONNECTOR KIT	HD-41404	1
BREAKOUT BOX	HD-50390-1	1
ECM CABLE	HD-50390-4	1
ECM OVERLAY	HD-50390-4-P	1

Table 1. DTC P0131 Diagnostic Faults

POSSIBLE CAUSES
Short to ground in signal circuit
Fuel system malfunction

NOTE

Vehicle and sensor must be at ambient room temperature before starting diagnostic test.

1. Front HO2S Voltage Test

1. Turn IGN OFF.
2. Disconnect front HO2S [138].
3. Turn IGN ON.
4. Using **TEST CONNECTOR KIT (Part Number:HD-41404)**, test voltage between [138A] terminal 3 (GN/BN) wire and ground.
5. Is voltage approximately 5V?

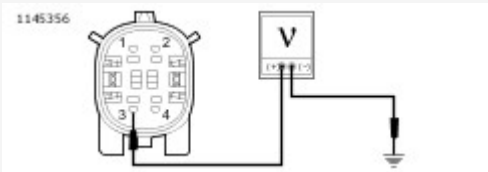

View interactive image

Figure 1.

a. **Yes.** **Go to Test 5.**
b. **No.** **Go to Test 2.**

2. HO2S Test

1. Test continuity between [138B] terminal 3 (GY) wire and ground.
2. Is continuity present?

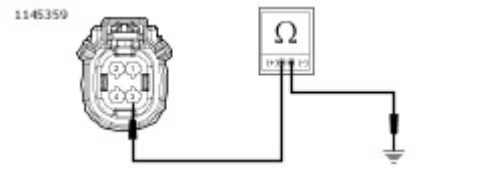

View interactive image

Figure 2.

a. **Yes.** Replace HO2S.
b. **No.** [Go to Test 3.]

3. Signal Wire Shorted to Sensor Ground Test

1. Turn IGN OFF.
2. Disconnect ECM [78-1], [78-2] and [78-3].
3. Test continuity between [138A] terminals 3 (GN/BN) wire and 4 (BK/W) wire.
4. Is continuity present?

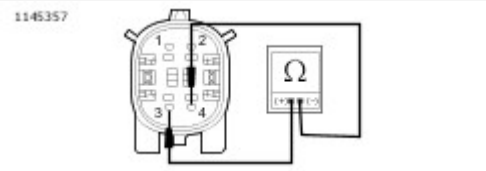

View interactive image

Figure 3.

a. **Yes.** Repair short between (GN/BN) and (BK/W) wires.
b. **No.** [Go to Test 4.]

4. Signal Wire Shorted to Ground Test

1. Test continuity between [138A] terminal 3 (GN/BN) wire and ground.
2. Is continuity present?

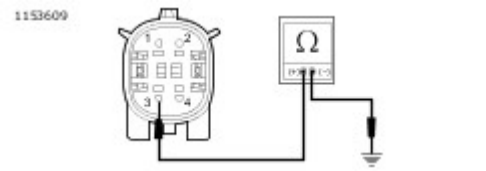

View interactive image

Figure 4.

a. **Yes.** Repair short between (GN/BN) wire and ground.
b. **No.** Replace ECM.

5. Operation Test

1. Connect **BREAKOUT BOX (Part Number:HD-50390-1)** and **ECM CABLE (Part Number:HD-50390-4)** between wiring harness [78B-1], [78B-2] and [78B-3], and ECM [78A-1], [78A-2] and [78A-3]. See **Initial Diagnostics → DIAGNOSTIC TOOLS**.
2. Verify **ECM OVERLAY (Part Number:HD-50390-4-P)** is in position on BOB.
3. Connect [138].
4. Start engine and allow it to reach operating temperature.
5. With engine speed at a steady rpm, test voltage between BOB [78-1] terminal 17 and [78-2] terminal 7.
6. Is voltage approximately 0.45V?

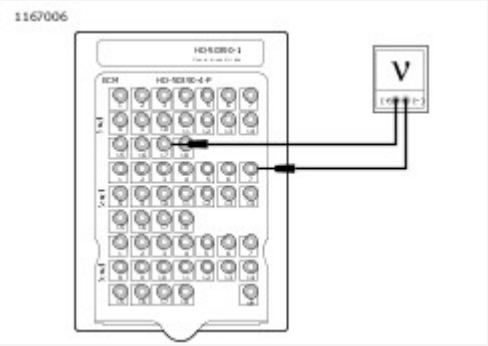

View interactive image

Figure 5.

a. **Yes.** Replace ECM.
b. **No.** (0.0-0.4V). Perform fuel pressure test. Look for incorrect ECM calibration, low fuel pressure, air leaks and dirty injectors. If no issues are found, replace HO2S.

Special Tools

Description	Part Number	Qty.
TEST CONNECTOR KIT	HD-41404	1
BREAKOUT BOX	HD-50390-1	1
ECM CABLE	HD-50390-4	1
ECM OVERLAY	HD-50390-4-P	1

Table 1. DTC P0132 Diagnostic Faults

POSSIBLE CAUSES
Fuel system malfunction

1. Front HO2S Operation Test

1. Turn IGN OFF.
2. Connect **BREAKOUT BOX (Part Number:HD-50390-1)** and **ECM CABLE (Part Number:HD-50390-4)** between wiring harness [78B-1], [78B-2] and [78B-3], and ECM [78A-1], [78A-2] and [78A-3]. See **Initial Diagnostics → DIAGNOSTIC TOOLS**.
3. Verify **ECM OVERLAY (Part Number:HD-50390-4-P)** is in position on BOB.
4. Start engine and allow it to reach operating temperature.
5. With engine speed at a steady rpm, using **TEST CONNECTOR KIT (Part Number:HD-41404)**, test voltage between BOB [78-1] terminal 17 and [78-2] terminal 7.
6. Is voltage approximately 0.45V?

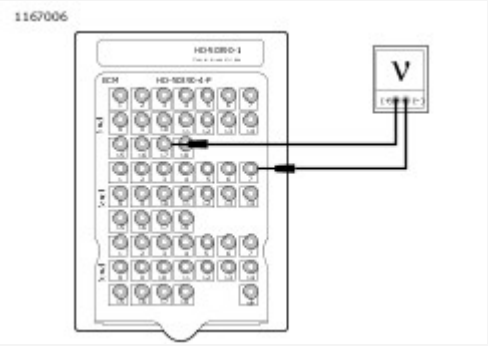

View interactive image

Figure 1.

a. **Yes.** Replace ECM.
b. **No.** (0.6-1.0V) Perform fuel pressure test. Look for incorrect ECM calibration, high fuel pressure, stuck open or leaking injectors. If no issues are found, replace HO2S.

Special Tools

Description	Part Number	Qty.
TEST CONNECTOR KIT	HD-41404	1
BREAKOUT BOX	HD-50390-1	1
ECM CABLE	HD-50390-4	1
ECM OVERLAY	HD-50390-4-P	1

Table 1. DTC P0134 Diagnostic Faults

POSSIBLE CAUSES
Open or short to voltage in signal circuit
Open sensor ground

1. Front HO2S Signal Wire Short Circuit Voltage Test

1. Turn IGN OFF.
2. Disconnect front HO2S [138].
3. Turn IGN ON.
4. Using **TEST CONNECTOR KIT (Part Number:HD-41404)**, test voltage between [138A] terminal 3 (GN/BN) wire to ground.
5. Is voltage greater than 5V?

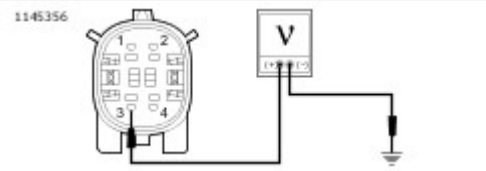

View interactive image

Figure 1.

a. **Yes.** Repair short to voltage on (GN/BN) wire.
b. **No, greater than 4V.** Go to Test 2.
c. **No, less than 4V.** Go to Test 3.

2. Open Sensor Ground Test

1. Turn IGN OFF.
2. Connect **BREAKOUT BOX (Part Number:HD-50390-1)** and **ECM CABLE (Part Number:HD-50390-4)** to wiring harness [78B-1], [78B-2] and [78B-3], leaving ECM [78A-1], [78A-2] and [78A-3] disconnected. See **Initial Diagnostics → DIAGNOSTIC TOOLS**.
3. Verify **ECM OVERLAY (Part Number:HD-50390-4-P)** is in position on BOB.
4. Test resistance between [138A] terminal 4 (BK/W) wire and BOB [78-2] terminal 7.
5. Is resistance less than 0.5 ohms?

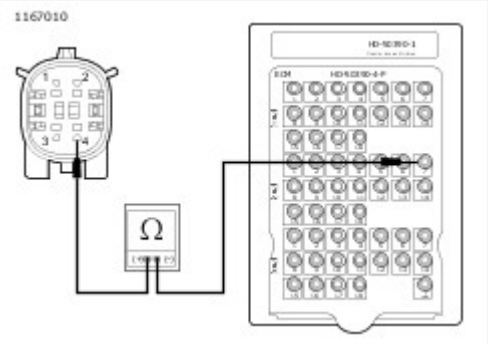

View interactive image

Figure 2.

a. **Yes.** Replace front O2 sensor.
b. **No.** Repair open on (BK/W) wire.

3. Signal Wire Open Test

1. Test resistance between [138A] terminal 3 (GN/BN) wire and BOB [78-1] terminal 17.
2. Is resistance less than 0.5 ohms?

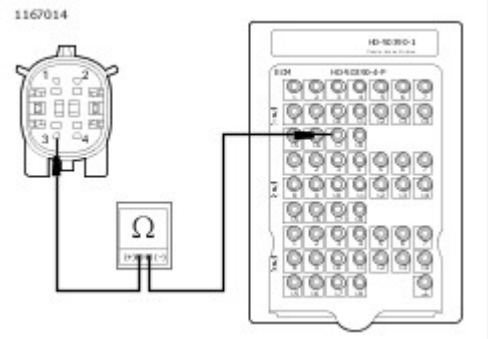

View interactive image

Figure 3.

a. **Yes.** Replace ECM.
b. **No.** Repair open in (GN/BN) wire.

Special Tools

Description	Part Number	Qty.
TEST CONNECTOR KIT	HD-41404	1
BREAKOUT BOX	HD-50390-1	1
ECM CABLE	HD-50390-4	1
ECM OVERLAY	HD-50390-4-P	1

Table 1. DTC P0151 Diagnostic Faults

POSSIBLE CAUSES
Short to ground in signal circuit
Fuel system malfunction

NOTE

Vehicle and sensor must be at ambient room temperature before starting diagnostic test.

1. Rear HO2S Test

1. Turn IGN OFF.
2. Disconnect rear HO2S [137].
3. Turn IGN ON.
4. Using **TEST CONNECTOR KIT (Part Number:HD-41404)**, test voltage between [137A] terminal 3 (GY/BN) wire to ground.
5. Is voltage approximately 5V?

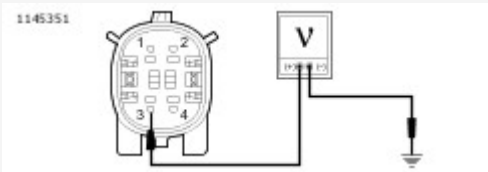

View interactive image

Figure 1.

a. **Yes.** **Go to Test 5.**
b. **No.** **Go to Test 2.**

2. HO2S Test

1. Test continuity between [137B] terminal 3 (GY) wire and ground.
2. Is continuity present?

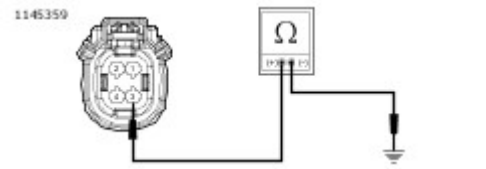

View interactive image

Figure 2.

a. **Yes.** Replace HO2S.
b. **No.** [Go to Test 3.]

3. Signal Wire Shorted to Sensor Ground Test

1. Turn IGN OFF.
2. Disconnect ECM [78-1], [78-2] and [78-3].
3. Test continuity between [137A] terminals 3 (GY/BN) wire and 4 (BK/W) wire.
4. Is continuity present?

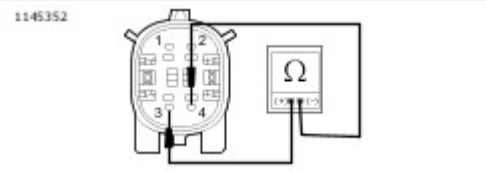

View interactive image

Figure 3.

a. **Yes.** Repair short between (GY/BN) and (BK/W) wires.
b. **No.** [Go to Test 4.]

4. Signal Wire Shorted to Ground Test

1. Test continuity between [137A] terminal 3 (GY/BN) wire and ground.
2. Is continuity present?

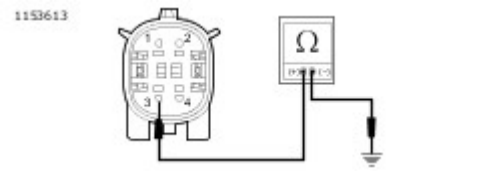

View interactive image

Figure 4.

a. **Yes.** Repair short between (GY/BN) wire and ground.
b. **No.** Replace ECM.

5. Operation Test

1. Connect **BREAKOUT BOX (Part Number:HD-50390-1)** and **ECM CABLE (Part Number:HD-50390-4)** between wiring harness [78B-1], [78B-2] and [78B-3], leaving ECM [78A-1], [78A-2] and [78A-3]. See **Initial Diagnostics → DIAGNOSTIC TOOLS**.
2. Verify **ECM OVERLAY (Part Number:HD-50390-4-P)** is in position on BOB.
3. Start engine and allow it to reach operating temperature.
4. With engine speed at a steady rpm, test voltage between BOB [78-2] terminal 17 and [78-2] terminal 7.
5. Is voltage approximately 0.45V?

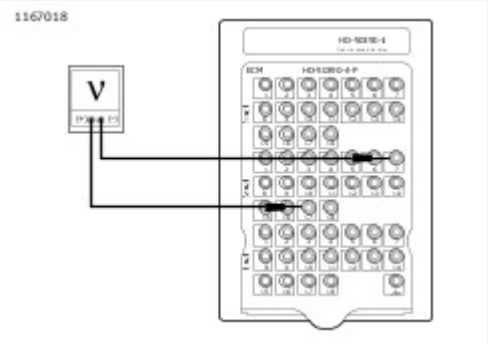

View interactive image

Figure 5.

a. **Yes.** Replace ECM.
b. **No.** (0.0-0.4V). Perform fuel pressure test. Look for incorrect ECM calibration, low fuel pressure, air leaks and dirty injectors. If no issues are found, replace HO2S.

Special Tools

Description	Part Number	Qty.
TEST CONNECTOR KIT	HD-41404	1
BREAKOUT BOX	HD-50390-1	1
ECM CABLE	HD-50390-4	1
ECM OVERLAY	HD-50390-4-P	1

Table 1. DTC P0152 Diagnostic Faults

POSSIBLE CAUSES
Fuel system malfunction

1. Rear HO2S Operation Test

1. Turn IGN OFF.
2. Connect **BREAKOUT BOX (Part Number:HD-50390-1)** and **ECM CABLE (Part Number:HD-50390-4)** between wiring harness [78B-1], [78B-2] and [78B-3], and ECM [78A-1], [78A-2] and [78A-3]. See **Initial Diagnostics → DIAGNOSTIC TOOLS**.
3. Verify **ECM OVERLAY (Part Number:HD-50390-4-P)** is in position on BOB.
4. Start engine and allow it to reach operating temperature.
5. Using **TEST CONNECTOR KIT (Part Number:HD-41404)**, with engine speed at a steady rpm, test voltage between BOB [78-2] terminal 17 and [78-2] terminal 7.
6. Is voltage approximately 0.45V?

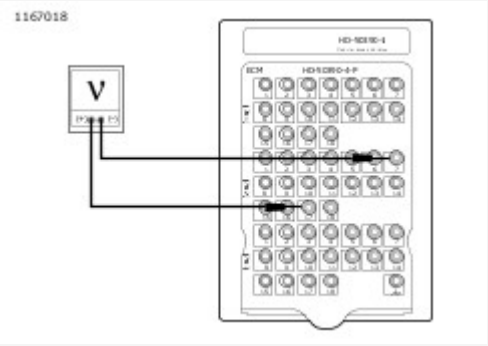

View interactive image

Figure 1.

a. **Yes.** Replace ECM.
b. **No.** (0.6-1.0V). Perform fuel pressure test. Look for incorrect ECM calibration, high fuel pressure, stuck open or leaking injectors. If no issues are found, replace HO2S.

Special Tools

Description	Part Number	Qty.
TEST CONNECTOR KIT	HD-41404	1
BREAKOUT BOX	HD-50390-1	1
ECM CABLE	HD-50390-4	1
ECM OVERLAY	HD-50390-4-P	1

Table 1. DTC P0154 Diagnostic Faults

POSSIBLE CAUSES
Open or short voltage in signal circuit
Open sensor ground

1. Rear HO2S Signal Wire Short Circuit Voltage Test

1. Turn IGN OFF.
2. Disconnect rear HO2S [137].
3. Turn IGN ON.
4. Using **TEST CONNECTOR KIT (Part Number:HD-41404)**, test voltage between [137A] terminal 3 (GY/BN) wire to ground.
5. Is voltage greater than 5V?

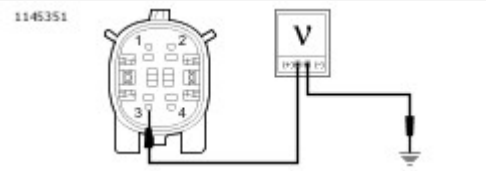

View interactive image

Figure 1.

a. **Yes.** Repair short to voltage on (GY/BN) wire.
b. **No, greater than 4V.** Go to Test 2.
c. **No, less than 4V.** Go to Test 3.

2. Open Sensor Ground Test

1. Turn IGN OFF.
2. Connect **BREAKOUT BOX (Part Number:HD-50390-1)** and **ECM CABLE (Part Number:HD-50390-4)** to wiring harness [78B-1] and [78B-2], leaving ECM [78A-1] and [78A-2] disconnected. See **Initial Diagnostics → DIAGNOSTIC TOOLS**.
3. Verify **ECM OVERLAY (Part Number:HD-50390-4-P)** is in position on BOB.
4. Test resistance between [137A] terminal 4 (BK/W) wire and BOB [78-2] terminal 7.
5. Is resistance less than 0.5 ohms?

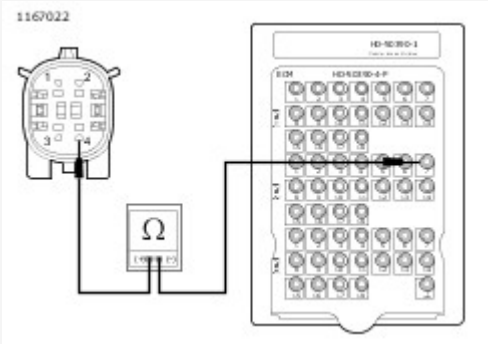

View interactive image

Figure 2.

a. **Yes.** Replace rear HO2S.
b. **No.** Repair open on (BK/W) wire.

3. Signal Wire Open Test

1. Test resistance between [137A] terminal 3 (GY/BN) wire and BOB [78-2] terminal 17.
2. Is resistance less than 0.5 ohms?

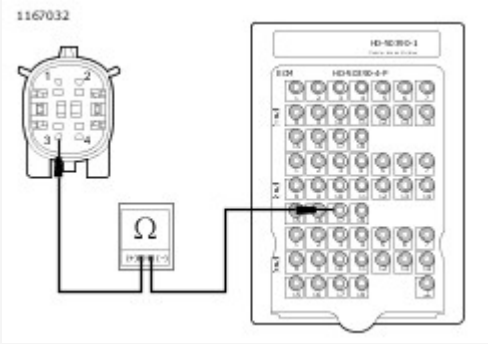

View interactive image

Figure 3.

a. **Yes.** Replace ECM.
b. **No.** Repair open in (GY/BN) wire.

See Figure 1. The fuel injectors are solenoids that allow pressurized fuel into the intake tract. The injectors are timed to the engine cycle and triggered sequentially. The power for the injectors comes from the BCM. The ECM provides the path to ground to trigger the injectors.

NOTE

System power failures or wiring harness problems will cause 12V power to be lost to both injectors and the ignition coils.

Table 1. Code Description

DTC	DESCRIPTION
P0261	Fuel injector low/open (front)
P0262	Fuel injector shorted high (front)
P0264	Fuel injector low/open (rear)
P0265	Fuel injector shorted high (rear)

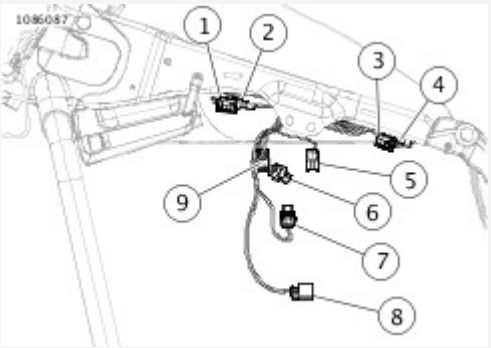

View interactive image

1	Front knock sensor [315]
2	Front ACR [203F]
3	Rear knock sensor [316]
4	Rear ACR [203R]
5	Rear injector [85]
6	TMAP [80]
7	Ignition coil [83]
8	Throttle control [211]
9	Front injector [84]

Figure 1. Engine

Diagnostic Tips

When disconnecting any connectors always inspect connector for corrosion or backed out terminals and repair as required.

Connector Information

For additional information about the connectors in the following diagram(s) and diagnostic procedure(s), see [Wiring → Wire Harness Connectors → General](#).

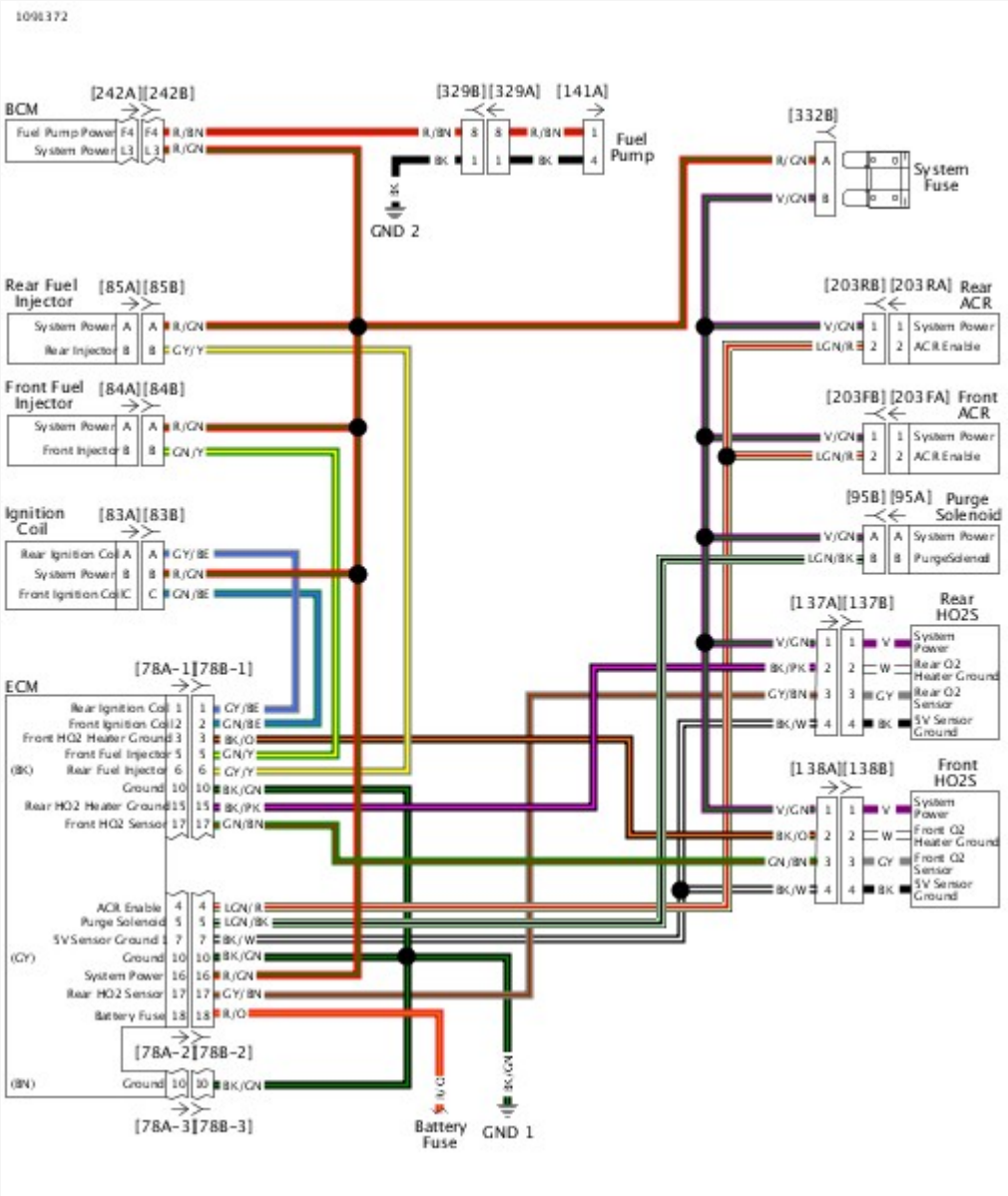

View interactive image

Figure 2. System Power Circuit

Special Tools

Description	Part Number	Qty.
FUEL INJECTOR TEST LIGHT	HD-34730-2E	1
TEST CONNECTOR KIT	HD-41404	1
BREAKOUT BOX	HD-50390-1	1
ECM CABLE	HD-50390-4	1
ECM OVERLAY	HD-50390-4-P	1

Table 1. DTC P0261 Diagnostic Faults

POSSIBLE CAUSES
Front fuel injector malfunction
Open signal circuit
Open power circuit

1. Front Fuel Injector Test

1. Turn IGN OFF.
2. Disconnect front fuel injector [84].
3. Connect **FUEL INJECTOR TEST LIGHT (Part Number:HD-34730-2E)** to [84B].
4. Crank engine.
5. Does light flash when engine is cranking (or running)?
    a. **Yes.** **Go to Test 4.**
    b. **No, lamp does not illuminate.** **Go to Test 2.**
    c. **No, lamp is on steady.** **Go to Test 5.**

2. Power Circuit Open Test

1. Turn IGN OFF.
2. Remove fuel injector test light.
3. Connect **BREAKOUT BOX (Part Number:HD-50390-1)** and **ECM CABLE (Part Number:HD-50390-4)** to wiring harness [78B-1], [78B-2] and [78B-3], leaving ECM [78A-1], [78A-2] and [78A-3] disconnected. See **Initial Diagnostics → DIAGNOSTIC TOOLS**.
4. Verify **ECM OVERLAY (Part Number:HD-50390-4-P)** is in position on BOB.
5. Using **TEST CONNECTOR KIT (Part Number:HD-41404)**, test resistance between BOB [78-2] terminal 16 and [84B] terminal A (R/GN) wire.
6. Is resistance less than 0.5 ohms?

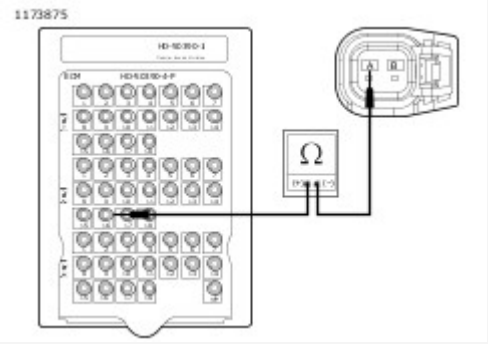

View interactive image

Figure 1.

a. **Yes.** Go to Test 3.
b. **No.** Repair open in (R/GN) wire.

3. Control Circuit Open Test

1. Test resistance between BOB [78-1] terminal 5 and [84B] terminal B (GN/Y) wire.
2. Is resistance less than 0.5 ohms?

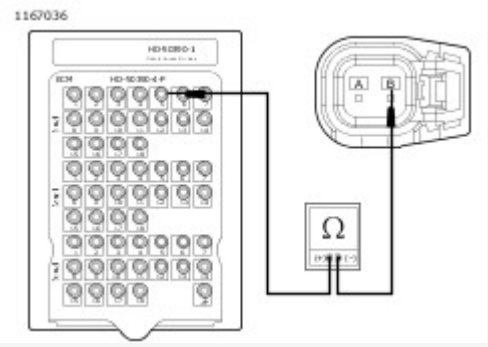

View interactive image

Figure 2.

a. **Yes.** Go to Test 4.
b. **No.** Repair open in (GN/Y) wire.

4. Injector Resistance Test

1. Using TEST CONNECTOR KIT (Part Number:HD-41404), test resistance between [84A] terminals A and B.
2. Is resistance between 10-20 ohms?

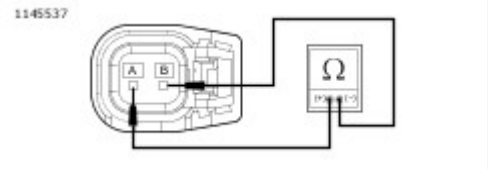

View interactive image

View interactive image

Figure 3.

a. **Yes.** Replace ECM.
b. **No.** Replace front injector.

5. Driver Short to Ground Test

1. Remove fuel injector test light.
2. Using [TEST CONNECTOR KIT (Part Number:HD-41404)](), test continuity between [84A] terminal B and ground.
3. Is continuity present?

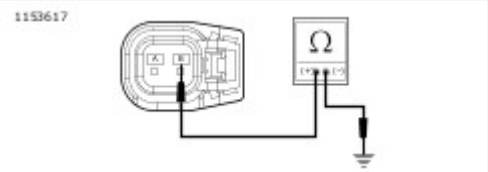

View interactive image

Figure 4.

a. **Yes.** Repair short to ground on (GN/Y) wire.
b. **No.** Replace ECM.

Special Tools

Description	Part Number	Qty.
TEST CONNECTOR KIT	HD-41404	1

Table 1. DTC P0262 Diagnostic Faults

POSSIBLE CAUSES
Short to ground in signal circuit

1. Front Fuel Injector Control Circuit Shorted to Voltage Test

1. Turn IGN OFF.
2. Disconnect front injector [84].
3. Turn IGN ON.
4. Using **TEST CONNECTOR KIT (Part Number:HD-41404)**, test voltage between [84B] terminal B (GN/Y) wire and ground.
5. Is voltage less than 5.0V?

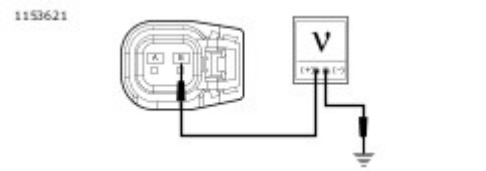

View interactive image

Figure 1.

a. **Yes.** **Go to Test 3.**
b. **No.** **Go to Test 2.**

2. Control Circuit Shorted to System Test

1. Turn IGN OFF.
2. Test continuity between [84B] terminals A and B.
3. Is continuity present?

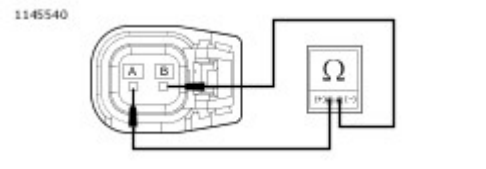

View interactive image

Figure 2.

a. **Yes.** Repair short between (R/GN) and (GN/Y) wires.

b. **No.** Repair short to voltage on (GN/Y) wire.

3. Injector Resistance Test

1. Test resistance between [84A] terminals A and B.
2. Is resistance between 10-20 ohms?

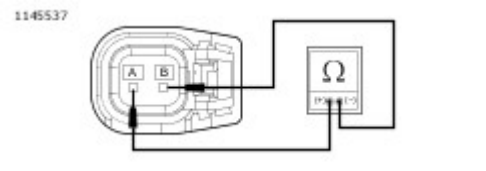

View interactive image

Figure 3.

a. **Yes.** Replace ECM.
b. **No.** Replace front injector.

Special Tools

Description	Part Number	Qty.
FUEL INJECTOR TEST LIGHT	HD-34730-2E	1
TEST CONNECTOR KIT	HD-41404	1
BREAKOUT BOX	HD-50390-1	1
ECM CABLE	HD-50390-4	1
ECM OVERLAY	HD-50390-4-P	1

Table 1. DTC P0264 Diagnostic Faults

POSSIBLE CAUSES
Open signal circuit
Open power circuit

1. Rear Fuel Injector Test

1. Turn IGN OFF.
2. Disconnect rear fuel injector [85].
3. Connect **FUEL INJECTOR TEST LIGHT (Part Number:HD-34730-2E)** to [85B].
4. Crank engine.
5. Does lamp flash when engine is cranking (or running)?
    a. **Yes.** **Go to Test 4.**
    b. **No, lamp does not illuminate.** **Go to Test 2.**
    c. **No, lamp is on steady.** **Go to Test 5.**

2. Power Circuit Open Test

1. Turn IGN OFF.
2. Remove fuel injector test light.
3. Connect **BREAKOUT BOX (Part Number:HD-50390-1)** and **ECM CABLE (Part Number:HD-50390-4)** to wiring harness [78B-1], [78B-2] and [78B-3], leaving ECM [78A-1], [78A-2] and [78A-3] disconnected. See **Initial Diagnostics → DIAGNOSTIC TOOLS**.
4. Verify **ECM OVERLAY (Part Number:HD-50390-4-P)** is in position on BOB.
5. Using **TEST CONNECTOR KIT (Part Number:HD-41404)**, test resistance between BOB [78-2] terminal 16 and [85B] terminal A (R/GN) wire.
6. Is resistance less than 0.5 ohms?

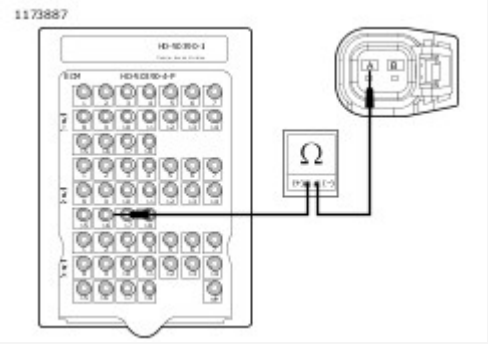

View interactive image

Figure 1.

a. **Yes.** [Go to Test 3.]
b. **No.** Repair open in (R/GN) wire.

3. Control Circuit Open Test

1. Test resistance between BOB [78-1] terminal 6 and [85B] terminal B (GY/Y) wire.
2. Is resistance less than 0.5 ohms?

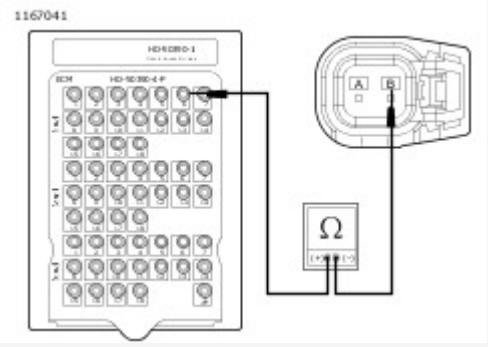

View interactive image

Figure 2.

a. **Yes.** [Go to Test 4.]
b. **No.** Repair open in (GY/Y) wire.

4. Injector Resistance Test

1. Using [TEST CONNECTOR KIT (Part Number:HD-41404)], test resistance between [85A] terminal A and B.
2. Is resistance between 10-20 ohms?

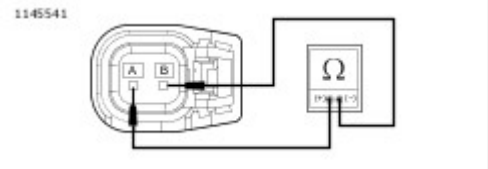

View interactive image

View interactive image

Figure 3.

a. **Yes.** Replace ECM.
b. **No.** Replace rear injector.

5. Driver Short to Ground Test

1. Remove fuel injector test light.
2. Using **TEST CONNECTOR KIT (Part Number:HD-41404)**, test continuity between [85B] terminal B and ground.
3. Is continuity present?

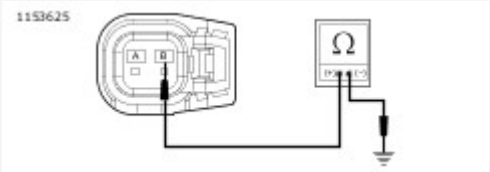

View interactive image

Figure 4.

a. **Yes.** Repair short to ground on (GY/Y) wire.
b. **No.** Replace ECM.

Special Tools

Description	Part Number	Qty.
TEST CONNECTOR KIT	HD-41404	1

Table 1. DTC P0265 Diagnostic Faults

POSSIBLE CAUSES
Short to ground in signal circuit

1. Rear Fuel Injector Control Circuit Shorted to Voltage Test

1. Turn IGN OFF.
2. Disconnect rear injector [85].
3. Turn IGN ON.
4. Using **TEST CONNECTOR KIT (Part Number:HD-41404)**, test voltage between [85B] terminal B (GY/Y) wire and ground.
5. Is voltage less than 5.0V?

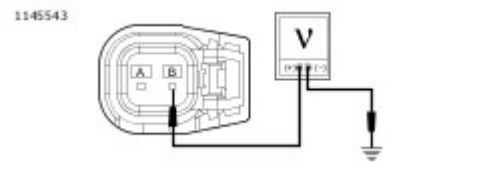

View interactive image

Figure 1.

a. **Yes.** Go to Test 3.
b. **No.** Go to Test 2.

2. Control Circuit Shorted to System Test

1. Turn IGN OFF.
2. Test continuity between [85B] terminals A (R/GN) wire and B (GY/Y) wire.
3. Is continuity present?

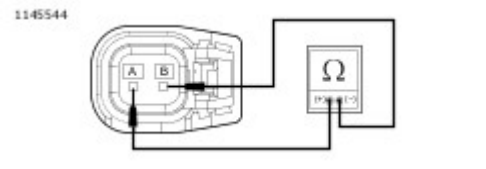

View interactive image

Figure 2.

a. **Yes.** Repair short between (R/GN) and (GY/Y) wires.

b. **No.** Repair short to voltage on (GY/Y) wire.

3. Injector Resistance Test

1. Test resistance between [85A] terminals A and B.
2. Is resistance between 10-20 ohms?

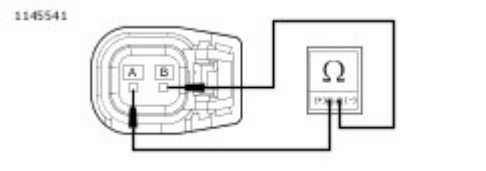

View interactive image

Figure 3.

a. **Yes.** Replace ECM.
b. **No.** Replace rear injector.

See Figure 1. If the CKP sensor signal is weak or absent, DTC P0371 or P0374 sets. DTC P0371 usually sets when several attempts to crank the engine have failed.

NOTE

If signal is not detected or cannot synchronize (DTC P0374), engine will not start.

Table 1. Code Description

DTC	DESCRIPTION
P0371	CKP sensor wrong number of pulses
P0374	CKP sensor no pulses

Diagnostic Tips

Engine must be cranked for more than five seconds without CKP signal to set P0374 code. Intermittent TMAP wiring or sensor issues may cause these codes to set prior to setting TMAP codes. Verify TMAP wiring and sensor prior to replacing the ECM.

When disconnecting any connectors always inspect connector for corrosion or backed out terminals and repair as required.

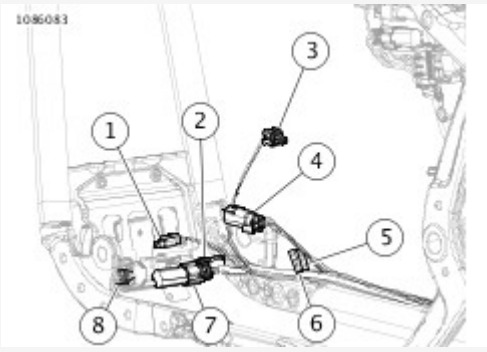

View interactive image

1	CKP [79]
2	Voltage regulator [77]
3	Oil pressure sensor [120]
4	Front HO2S [138]
5	Rear brake switch [121-1]
6	Rear brake switch [121-2]
7	JSS [133]
8	Stator [47]

Figure 1. Front of Engine: Typical

Connector Information

For additional information about the connectors in the following diagram(s) and diagnostic procedure(s), see [Wiring → Wire Harness Connectors → General](#).

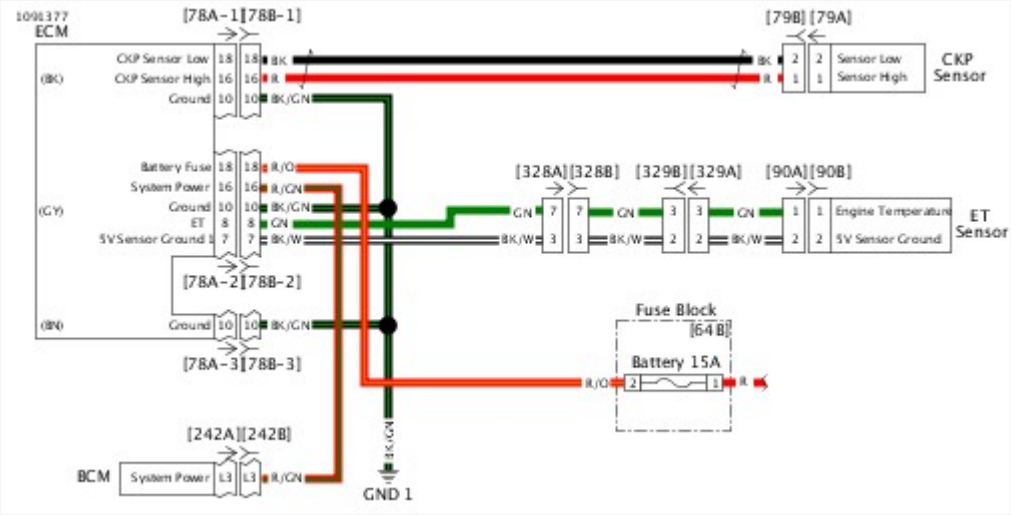

View interactive image

Figure 2. ET Sensor and CKP Circuit

Special Tools

Description	Part Number	Qty.
TEST CONNECTOR KIT	HD-41404	1
BREAKOUT BOX	HD-50390-1	1
ECM CABLE	HD-50390-4	1
ECM OVERLAY	HD-50390-4-P	1

Table 1. DTC P0371, P0374 Diagnostic Faults

POSSIBLE CAUSES
CKP sensor malfunction
Open or short to ground in signal circuit
May be set if there are incorrect fluctuations from TMAP that does not set TMAP codes (examples - intermittent sensor or wiring issue)

1. CKP Sensor Connections Test

1. Turn IGN OFF.
2. Disconnect ECM [78-1], [78-2] and [78-3].
3. Inspect connection for corrosion or backed out terminals.
4. Are terminal problems present?
    a. **Yes.** Repair terminals as required.
    b. **No.** Go to Test 2.

2. Signal Wire Continuity Test

1. Disconnect CKP sensor [79].
2. Connect **BREAKOUT BOX (Part Number:HD-50390-1)** and **ECM CABLE (Part Number:HD-50390-4)** to wiring harness [78B-1], [78B-2] and [78B-3], leaving ECM [78A-1], [78A-2] and [78A-3] disconnected. See **Initial Diagnostics → DIAGNOSTIC TOOLS**.
3. Verify **ECM OVERLAY (Part Number:HD-50390-4-P)** is in position on BOB.
4. Using **TEST CONNECTOR KIT (Part Number:HD-41404)**, test resistance between BOB [78-1] terminal 16 to [79B] terminal 1 (R) wire.
5. Is resistance less than 0.5 ohm?

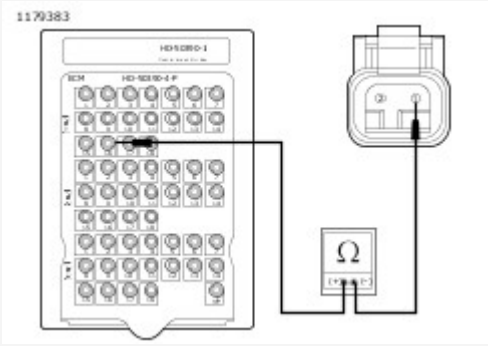

View interactive image

Figure 1.

a. **Yes.** [Go to Test 3.]
b. **No.** Repair open on (R) wire.

3. Ground Wire Continuity Test

1. Test resistance between BOB [78-1] terminal 18 to [79B] terminal 2 (BK) wire.
2. Is resistance less than 0.5 ohm?

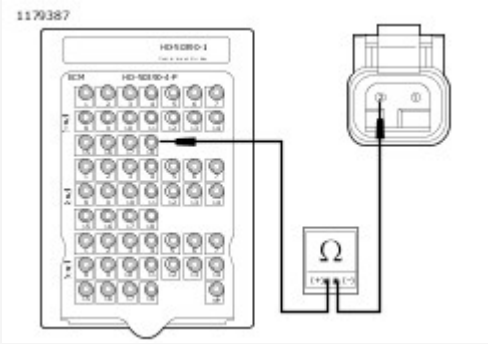

View interactive image

Figure 2.

a. **Yes.** [Go to Test 4.]
b. **No.** Repair open on (BK) wire.

4. Signal Wire Shorted to CKP Ground Wire Test

1. Test continuity between BOB [78-1] terminals 16 and 18.
2. Is continuity present?

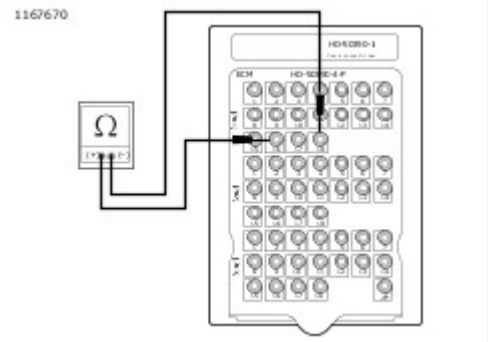

View interactive image

Figure 3.

a. **Yes.** Repair short between [79B] terminals 1 (R) and 2 (BK).
b. **No.** [Go to Test 5.]

5. Output Test

1. Connect CKP sensor [79].
2. Test AC voltage between BOB [78-1] terminals 16 and 18.
3. Crank engine for 5 seconds while observing multimeter.
4. Is AC voltage greater than 2V?

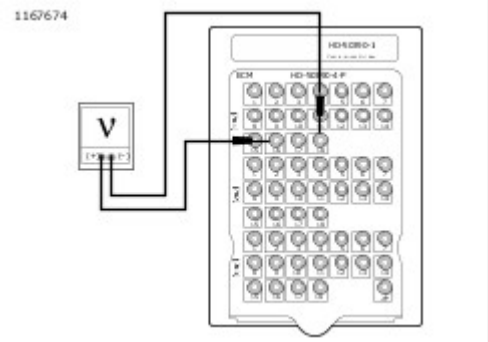

View interactive image

Figure 4.

a. **Yes.** See diagnostic tips. If TMAP sensor is good, replace ECM.
b. **No.** Replace CKP sensor.

The knock sensor is a piezoelectric sensor that contains a seismic mass, brass carrier, contact ring and a ceramic piezo element. The knock sensor creates a voltage signal based on the vibrations caused by detonation. The ECM uses this signal to alter the ignition timing and prevent detonation.

Table 1. Code Description

DTC	DESCRIPTION
P0325	Knock sensor front open circuit
P0327	Knock sensor front circuit low
P0328	Knock sensor front circuit high
P0330	Knock sensor rear open circuit
P0332	Knock sensor rear circuit low
P0333	Knock sensor rear circuit high

Diagnostic Tips

The symptoms of a bad knock sensor show up at highway speeds or under load. A fault in the knock sensor circuit may impact acceleration and fuel mileage due to incorrect ignition timing.

Connector Information

For additional information about the connectors in the following diagram(s) and diagnostic procedure(s), see **Wiring → Wire Harness Connectors → General**.

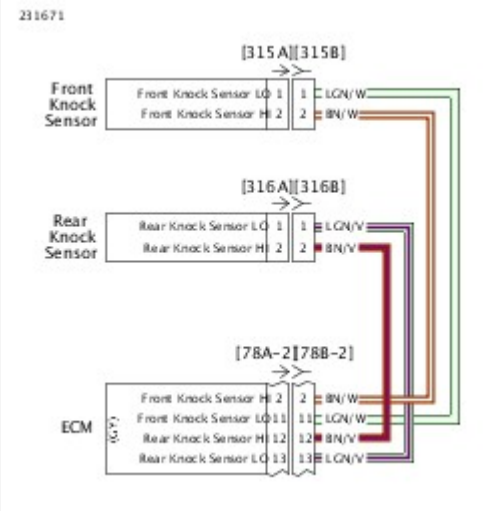

View interactive image

Figure 1. Knock Sensor Circuit

Special Tools

Description	Part Number	Qty.
TEST CONNECTOR KIT	HD-41404	1
BREAKOUT BOX	HD-50390-1	1
ECM CABLE	HD-50390-4	1
ECM OVERLAY	HD-50390-4-P	1

Table 1. DTC P0325 Diagnostic Faults

POSSIBLE CAUSES
Loose front knock sensor
Open in front knock sensor circuit

1. Knock Sensor Attachment Test

1. Verify knock sensor is secured to front cylinder.
2. Is sensor secured?
    a. **Yes.** Go to Test 2.
    b. **No.** Secure sensor.

2. Sensor LO Open Test

1. Disconnect front knock sensor [315].
2. Connect BREAKOUT BOX (Part Number:HD-50390-1) and ECM CABLE (Part Number:HD-50390-4) to wiring harness [78B-1], [78B-2] and [78B-3], leaving ECM [78A-1], [78A-2] and [78A-3] disconnected. See Initial Diagnostics → DIAGNOSTIC TOOLS.
3. Verify ECM OVERLAY (Part Number:HD-50390-4-P) is in position on BOB.
4. Using TEST CONNECTOR KIT (Part Number:HD-41404), test resistance between [315B] terminal 1 (LGN/W) and BOB [78-2] terminal 11.
5. Is resistance less than 0.5 ohms?

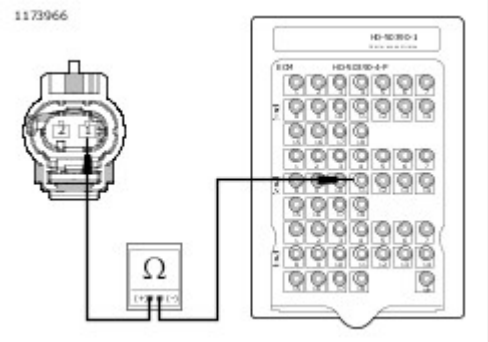

View interactive image

Figure 1.

a. **Yes.** Go to Test 3.

b. **No.** Repair open in (LGN/W).

3. Sensor HI Open Test

1. Test resistance between [315B] terminal 2 (BN/W) and BOB [78-2] terminal 2.
2. Is resistance less than 0.5 ohms?

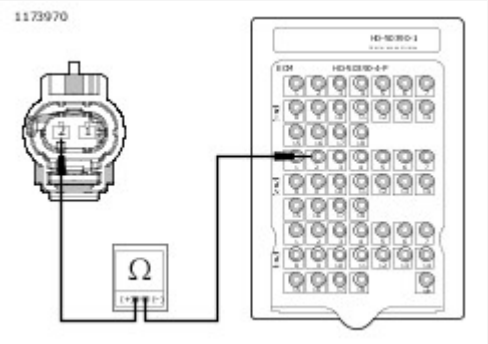

View interactive image

Figure 2.

a. **Yes.** Replace front knock sensor.

b. **No.** Repair open in (BN/W).

Special Tools

Description	Part Number	Qty.
TEST CONNECTOR KIT	HD-41404	1
BREAKOUT BOX	HD-50390-1	1
ECM CABLE	HD-50390-4	1
ECM OVERLAY	HD-50390-4-P	1

Table 1. DTC P0327, P0328 Diagnostic Faults

POSSIBLE CAUSES
Short to ground in front knock sensor circuit
Short to voltage in front knock sensor circuit

1. Sensor LO Test

1. Turn IGN OFF.
2. Connect **BREAKOUT BOX (Part Number:HD-50390-1)** and **ECM CABLE (Part Number:HD-50390-4)** between wiring harness [78B-1], [78B-2] and [78B-3], and ECM [78A-1], [78A-2] and [78A-3].
3. Verify **ECM OVERLAY (Part Number:HD-50390-4-P)** is in position on BOB.
4. Turn IGN ON.
5. Using **TEST CONNECTOR KIT (Part Number:HD-41404)**, test voltage between BOB [78-2] terminal 11 and ground.
6. Is voltage between 2-3V?

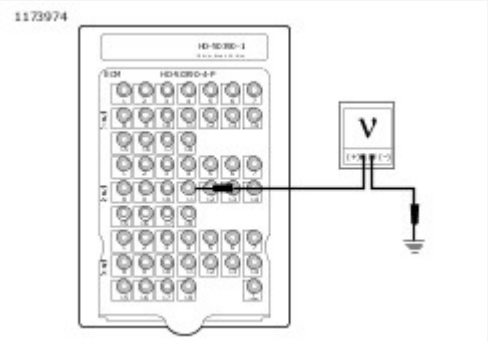

View interactive image

Figure 1.

a. **Yes.** Go to Test 2.
b. **No. Greater than 3V.** Repair short to voltage on (LGN/W).
c. **No. Less than 2V.** Repair short to ground on (LGN/W).

2. Sensor HI Test

1. Test voltage between BOB [78-2] terminal 2 and ground.
2. Is voltage between 2-3V?

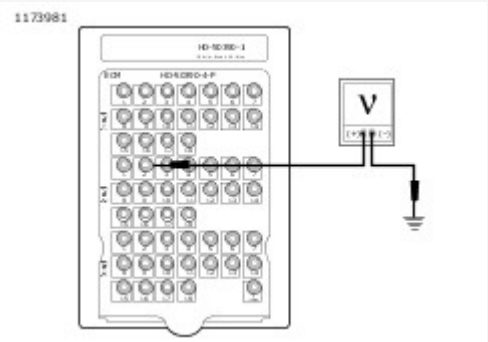

View interactive image

Figure 2.

a. **Yes.** [Go to Test 3.](#)
b. **No. Greater than 3V.** Repair short to voltage on (BN/W).
c. **No. Less than 2V.** Repair short to ground on (BN/W).

3. Connection Test

1. Turn IGN OFF.
2. Disconnect BOB, connect ECM to main harness.
3. Clear DTCs.
4. Turn IGN OFF for 1 minute.
5. Start and run engine for 1 minute.
6. Check DTCs.
7. Did DTC reset?
   a. **Yes.** Replace ECM.
   b. **No.** System operating properly.

Special Tools

Description	Part Number	Qty.
TEST CONNECTOR KIT	HD-41404	1
BREAKOUT BOX	HD-50390-1	1
ECM CABLE	HD-50390-4	1
ECM OVERLAY	HD-50390-4-P	1

Table 1. DTC P0330 Diagnostic Faults

POSSIBLE CAUSES
Loose rear knock sensor
Open in rear knock sensor circuit

1. Knock Sensor Attachment Test

1. Verify knock sensor is secured to rear cylinder.
2. Is sensor secured?
    a. **Yes.** Go to Test 2.
    b. **No.** Secure sensor.

2. Sensor LO Open Test

1. Disconnect rear knock sensor [316].
2. Connect BREAKOUT BOX (Part Number:HD-50390-1) and ECM CABLE (Part Number:HD-50390-4) to wiring harness [78B-1], [78B-2] and [78B-3], leaving ECM [78A-1], [78A-2] and [78A-3] disconnected. See Initial Diagnostics → DIAGNOSTIC TOOLS.
3. Verify ECM OVERLAY (Part Number:HD-50390-4-P) is in position on BOB.
4. Using TEST CONNECTOR KIT (Part Number:HD-41404), test resistance between [316B] terminal 1 (LGN/V) and BOB [78-2] terminal 13.
5. Is resistance less than 0.5 ohms?

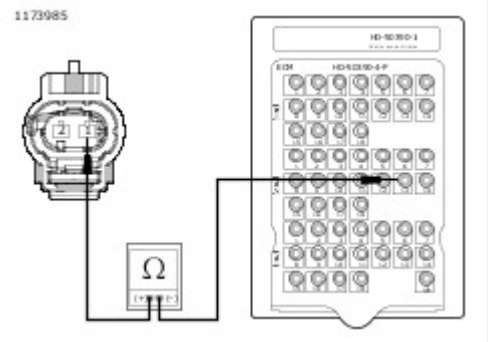

View interactive image

Figure 1.

a. **Yes.** Go to Test 3.

b. **No.** Repair open in (LGN/V).

3. Sensor HI Open Test

1. Test resistance between [316B] terminal 2 (BN/V) and BOB [78-2] terminal 12.
2. Is resistance less than 0.5 ohms?

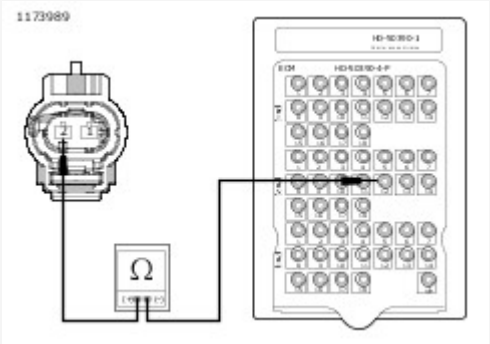

View interactive image

Figure 2.

a. **Yes.** Replace rear knock sensor.

b. **No.** Repair open in (BN/V).

Special Tools

Description	Part Number	Qty.
TEST CONNECTOR KIT	HD-41404	1
BREAKOUT BOX	HD-50390-1	1
ECM CABLE	HD-50390-4	1
ECM OVERLAY	HD-50390-4-P	1

Table 1. DTC P0332, P0333 Diagnostic Faults

POSSIBLE CAUSES
Short to ground in rear knock sensor circuit
Short to voltage in rear knock sensor circuit

1. Sensor LO Test

1. Turn IGN OFF.
2. Connect **BREAKOUT BOX (Part Number:HD-50390-1)** and **ECM CABLE (Part Number:HD-50390-4)** between wiring harness [78B-1], [78B-2] and [78B-3], and ECM [78A-1], [78A-2] and [78A-3].
3. Verify **ECM OVERLAY (Part Number:HD-50390-4-P)** is in position on BOB.
4. Turn IGN ON.
5. Using **TEST CONNECTOR KIT (Part Number:HD-41404)**, test voltage between BOB [78-2] terminal 13 and ground.
6. Is voltage between 2-3V?

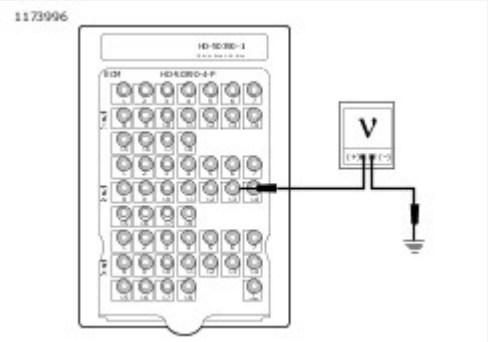

View interactive image

Figure 1.

a. **Yes.** Go to Test 2.
b. **No. Greater than 3V.** Repair short to voltage on (LGN/V).
c. **No. Less than 2V.** Repair short to ground on (LGN/V).

2. Sensor HI Test

1. Test voltage between BOB [78-2] terminal 12 and ground.
2. Is voltage between 2-3V?

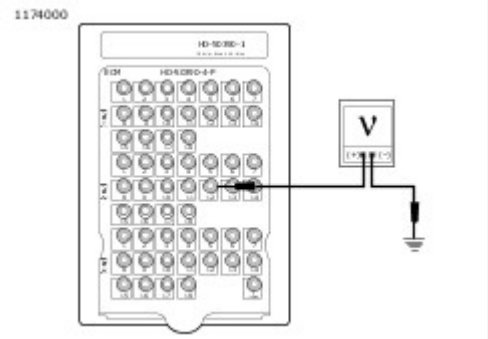

View interactive image

Figure 2.

a. **Yes.** Go to Test 3.
b. **No. Greater than 3V.** Repair short to voltage on (BN/V).
c. **No. Less than 2V.** Repair short to ground on (BN/V).

3. Connection Test

1. Turn IGN OFF.
2. Disconnect BOB, connect ECM to main harness.
3. Clear DTCs.
4. Turn IGN OFF for 1 minute.
5. Start and run engine for 1 minute.
6. Check DTCs.
7. Did DTC reset?
    a. **Yes.** Replace ECM.
    b. **No.** System operating properly.

Purge Solenoid (CA and Select International Market Models Only)

See **Figure 1**. The solenoid connects to a fuel tank vent line and a vent canister.

A return line from the canister reconnects to the air intake manifold allowing vented fumes to be recirculated, for emission efficiency. The purge solenoid is timed to the throttle position and is disabled during startup, low engine temperature, low engine speed or low vehicle speed.

Power for the purge solenoid is supplied by the BCM. The BCM also provides power for the VSS, fuel injectors, active exhaust, active intake, ECM and the ignition coil.

The ECM provides a path to ground to trigger the purge solenoid.

NOTE

- BCM or wiring harness problems will cause 12V power to be lost to the VSS, fuel injectors, active exhaust, active intake, ECM, ignition coil and purge solenoid.
- Purge solenoid is not installed on non-emission vehicles and DTCs P0444 and P0445 are not available. If these DTCs appear, the ECM should be reprogrammed.

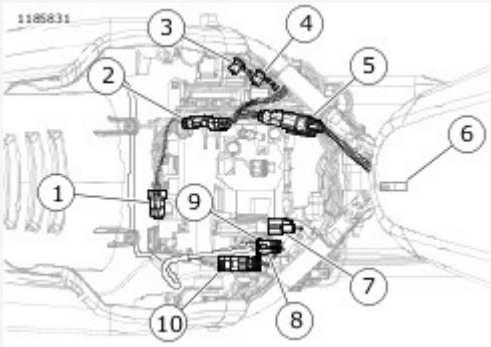

View interactive image

1	Purge solenoid [95]
2	Engine harness [145]
3	GND 1
4	GND 2
5	Backbone harness interconnect [327]
6	Engine harness interconnect [328]
7	Security antenna [209]
8	Left rear lighting [19]
9	Right rear lighting [18]
10	Tail lamp [40]

Figure 1. Under Seat

Table 1. Code Description

DTC	DESCRIPTION
P0444	Purge solenoid low/open
P0445	Purge solenoid shorted high

Diagnostic Tips

The purge solenoid is powered from the system power circuit. This circuit voltage is supplied by the BCM through the system power fuse. Any short causing the fuse to open will cause the ECM to set DTC P0444. If this code is present with an open fuse, the fault is a short to ground somewhere in the circuit or the components.

When disconnecting any connectors always inspect connector for corrosion or backed out terminals and repair as required.

Connector Information

For additional information about the connectors in the following diagram(s) and diagnostic procedure(s), see **Wiring → Wire Harness Connectors → General**.

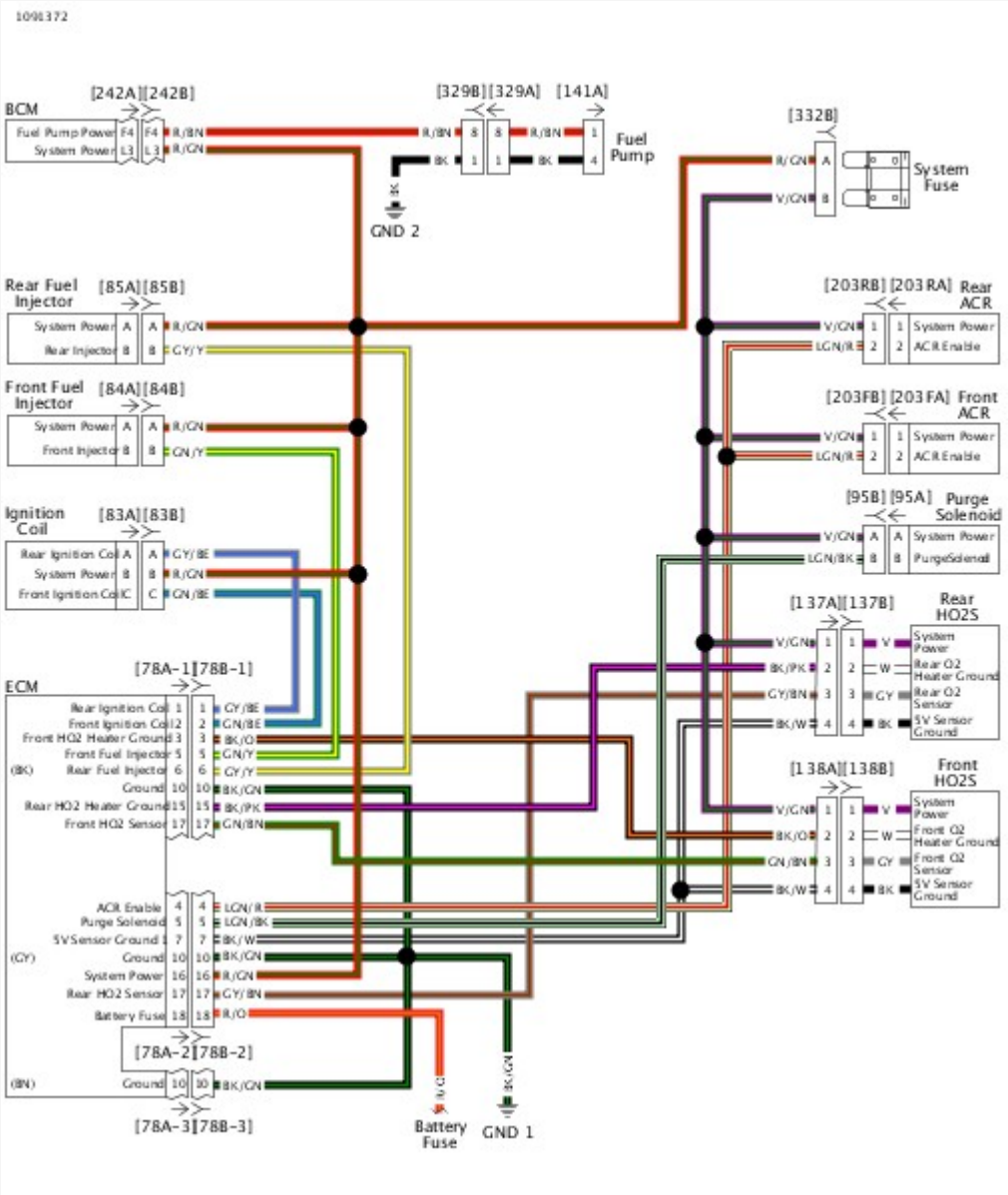

View interactive image

Figure 2. System Power Circuit

Special Tools

Description	Part Number	Qty.
TEST CONNECTOR KIT	HD-41404	1
BREAKOUT BOX	HD-50390-1	1
ECM CABLE	HD-50390-4	1
ECM OVERLAY	HD-50390-4-P	1

Table 1. DTC P0444 Diagnostic Faults

POSSIBLE CAUSES
Purge solenoid malfunction
Short to ground in signal circuit

1. Purge Solenoid Test

1. Turn IGN OFF.
2. Disconnect purge solenoid [95].
3. Using [TEST CONNECTOR KIT (Part Number:HD-41404)](), test resistance between [95A] terminals A and B of the purge solenoid.
4. Is resistance between 4-21 ohms?

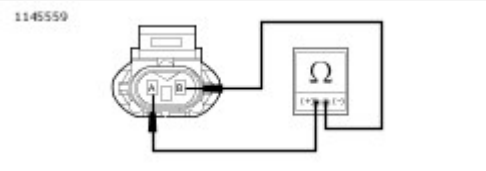

View interactive image

Figure 1.

a. **Yes.** [Go to Test 2.]()
b. **No.** Replace purge solenoid.

2. Purge Solenoid Voltage Test

1. Test voltage between [95B] terminal A (V/GN) wire and ground.
2. Turn IGN ON.
3. Is battery voltage present?

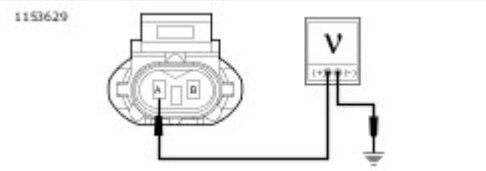

View interactive image

Figure 2.

a. **Yes.** Go to Test 3.
b. **No.** Go to Test 5.

3. Control Wire Shorted to Ground Test

1. Turn IGN OFF.
2. Disconnect ECM [78-1], [78-2] and [78-3].
3. Test continuity between [95B] terminal B (LGN/BK) wire and ground.
4. Is continuity present?

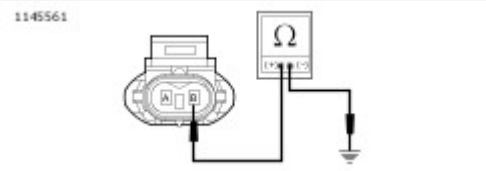

View interactive image

Figure 3.

a. **Yes.** Repair short to ground on (LGN/BK) wire.
b. **No.** Go to Test 4.

4. Control Wire Open Test

1. Connect BREAKOUT BOX (Part Number:HD-50390-1) and ECM CABLE (Part Number:HD-50390-4) to wiring harness [78B-1], [78B-2] and [78B-3], leaving ECM [78A-1], [78A-2] and [78A-3] disconnected. See Initial Diagnostics → DIAGNOSTIC TOOLS.
2. Verify ECM OVERLAY (Part Number:HD-50390-4-P) is in position on BOB.
3. Test resistance between [95B] terminal B (LGN/BK) wire and BOB [78-2] terminal 5.
4. Is resistance less than 0.5 ohms?

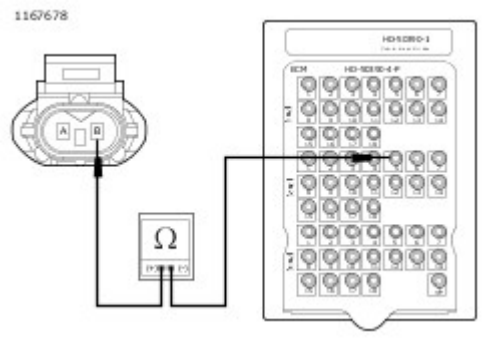

View interactive image

Figure 4.

a. **Yes.** Replace ECM.
b. **No.** Repair open in (LGN/BK) wire.

5. Power Wire Open Test

1. Connect **BREAKOUT BOX (Part Number:HD-50390-1)** and **ECM CABLE (Part Number:HD-50390-4)** to wiring harness [78B-1], [78B-2] and [78B-3], leaving ECM [78A-1], [78A-2] and [78A-3] disconnected. See **Initial Diagnostics → DIAGNOSTIC TOOLS**.
2. Verify **ECM OVERLAY (Part Number:HD-50390-4-P)** is in position on BOB.
3. Test resistance between [95B] terminal A (V/GN) wire and BOB [78-2] terminal 16.
4. Is resistance less than 0.5 ohms?

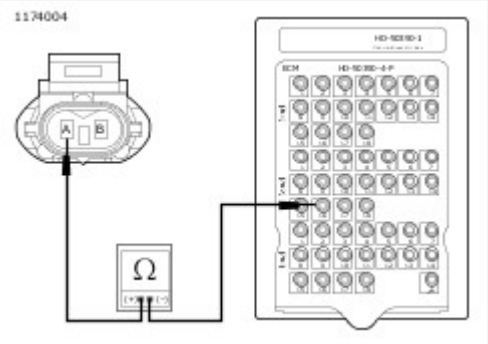

View interactive image

Figure 5.

a. **Yes.** Replace ECM.
b. **No.** Repair open in (V/GN) wire.

Special Tools

Description	Part Number	Qty.
TEST CONNECTOR KIT	HD-41404	1

Table 1. DTC P0445 Diagnostic Faults

POSSIBLE CAUSES
Short to voltage in signal circuit

1. Purge Solenoid Test

1. Turn IGN OFF.
2. Disconnect purge solenoid [95].
3. Using **TEST CONNECTOR KIT (Part Number:HD-41404)**, test resistance between [95A] terminals A and B of purge solenoid.
4. Is resistance between 4-21 ohms?

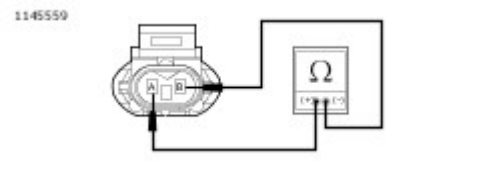

View interactive image

Figure 1.

a. **Yes.** **Go to Test 2.**
b. **No.** Replace purge solenoid.

2. Purge Solenoid Short to Voltage Test

1. Turn IGN ON.
2. Test voltage between [95B] terminal B (LGN/BK) wire and ground.
3. Is voltage greater than 5.0V?

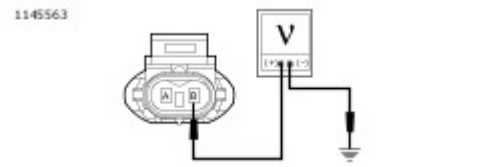

View interactive image

Figure 2.

a. **Yes.** Repair short to voltage on (LGN/BK) wire.

b. **No.** Replace ECM.

See Figure 1. The VSS is powered and monitored by the ECM. The ECM processes the vehicle speed signal and transmits this signal to the BCM and the speedometer/IM through the CAN bus circuit.

NOTE

- The ECM uses VSS input to calculate idle air control position. Therefore problems with the vehicle speed signal can lead to improper operation of the idle air control.
- The TGS, JSS, TCA and VSS sensors are connected to the same reference line (5V reference). If the reference line goes to ground or open, multiple codes will be set (DTC P0122, P0123, P0502, P0503, P1501, P1502, P2101, P2102, P2103, P2122, P2123, P2127, P2128). Start with the trouble code having the lowest ranking value.
- A faulty sensor can negatively affect the signal voltage of the other sensors sharing the same 5V reference. If the wiring passes the following tests, disconnect one sensor at a time on the 5V reference and verify the DTC is still present. Additional DTCs will be set as each sensor is disconnected, clear DTCs after this test. Be sure to perform this test before replacing a component.

Table 1. Code Description

DTC	DESCRIPTION
P0502	VSS failed low
P0503	VSS failed high

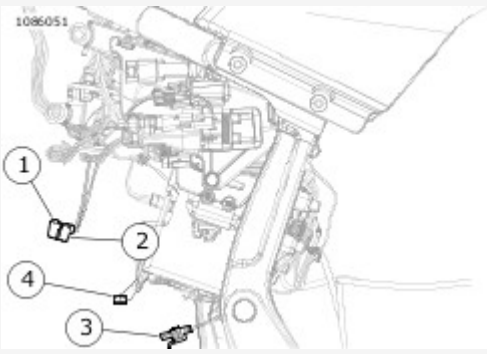

View interactive image

1	Neutral [131-1]
2	Neutral [131-2]
3	VSS [65]
4	Transmission GND

Figure 1. Top of Transmission

Diagnostic Tips

When disconnecting any connectors always inspect connector for corrosion or backed out terminals and repair as required.

Connector Information

For additional information about the connectors in the following diagram(s) and diagnostic procedure(s), see **Wiring → Wire Harness Connectors → General**.

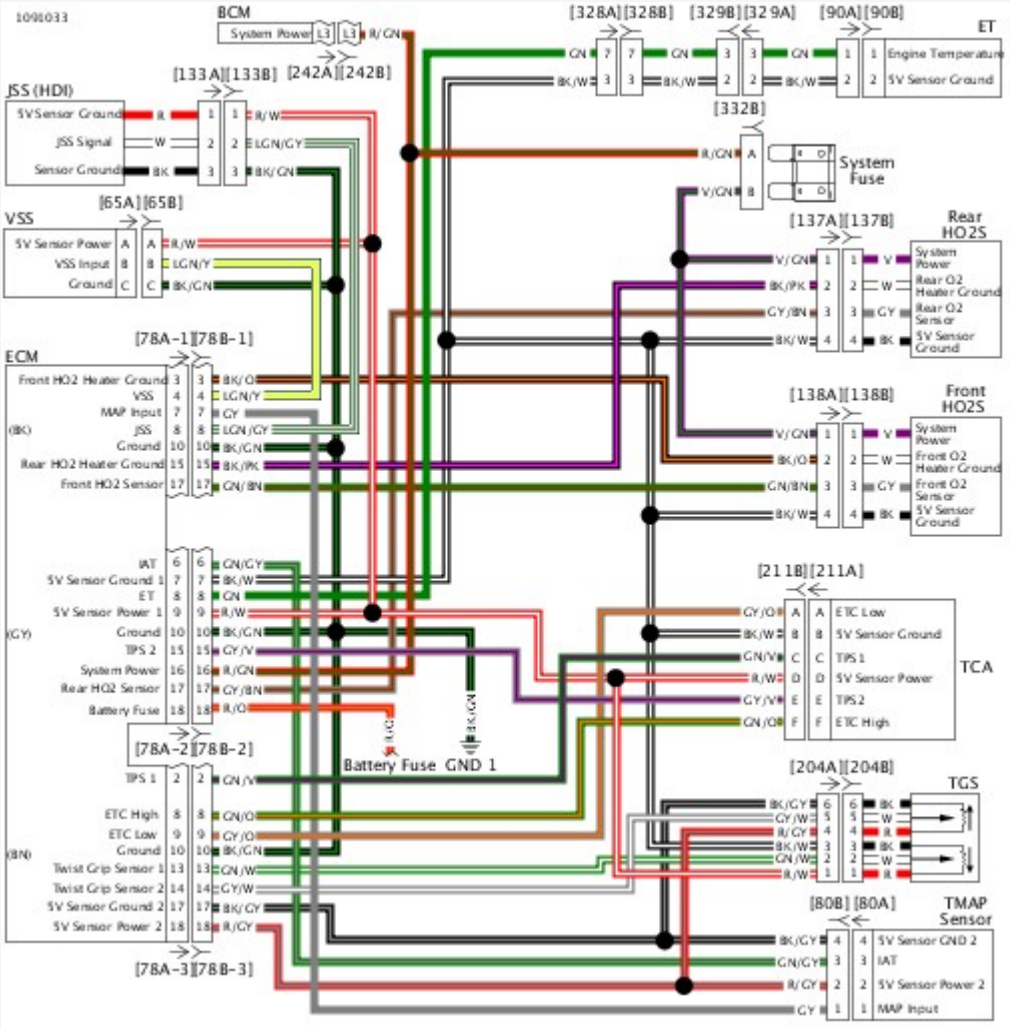

View interactive image

Figure 2. Sensor Circuit

Special Tools

Description	Part Number	Qty.
TEST CONNECTOR KIT	HD-41404	1
BREAKOUT BOX	HD-50390-1	1
ECM CABLE	HD-50390-4	1
ECM OVERLAY	HD-50390-4-P	1

Table 1. DTC P0502 Diagnostic Faults

POSSIBLE CAUSES
VSS malfunction
Open or short to ground in signal circuit
Open or short to ground in 5V reference circuit

1. Dirty or Damaged Test

1. Remove VSS.
2. Check for debris on sensor tip.
3. Is debris present?
    a. **Yes.** Clean debris from VSS and install.
    b. **No.** Go to Test 2.

2. VSS Connections Test

1. Turn IGN OFF.
2. Disconnect VSS [65].
3. Turn IGN ON.
4. Using TEST CONNECTOR KIT (Part Number:HD-41404), test voltage between [65B] terminal A (R/W) wire and ground.
5. Is voltage approximately 5.0V?

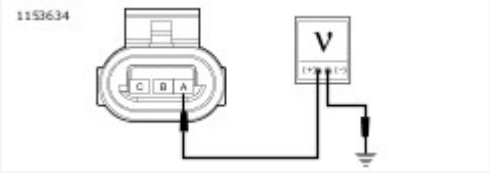

View interactive image

Figure 1.

    a. **Yes.** Go to Test 3.
    b. **No.** Repair open on (R/W) wire.

3. Signal Wire Short to Ground Test

1. Turn IGN OFF.
2. Connect **BREAKOUT BOX (Part Number:HD-50390-1)** and **ECM CABLE (Part Number:HD-50390-4)** to wiring harness [78B-1], [78B-2] and [78B-3], leaving ECM [78A-1], [78A-2] and [78A-3] disconnected. See **Initial Diagnostics → DIAGNOSTIC TOOLS**.
3. Verify **ECM OVERLAY (Part Number:HD-50390-4-P)** is in position on BOB.
4. Test continuity between BOB [78-1] terminals 4 and 10.
5. Is continuity present?

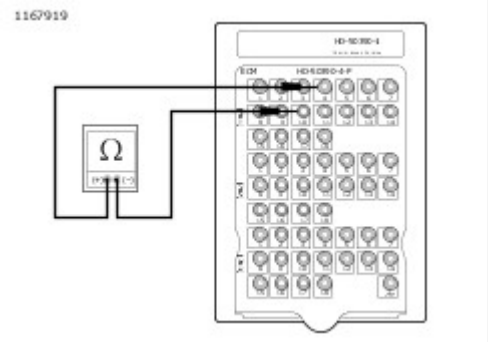

View interactive image

Figure 2.

a. **Yes.** Repair short to ground on (LGN/Y) wire.
b. **No.** **Go to Test 4.**

4. Signal Wire Open Test

1. Test resistance between BOB [78-1] terminal 4 and [65B] terminal B (LGN/Y) wire.
2. Is resistance less than 0.5 ohms?

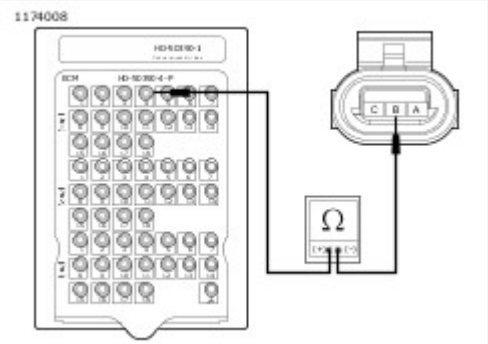

View interactive image

Figure 3.

a. **Yes.** Replace VSS.
b. **No.** Repair open on (LGN/Y) wire.

Special Tools

Description	Part Number	Qty.
TEST CONNECTOR KIT	HD-41404	1
BREAKOUT BOX	HD-50390-1	1
ECM CABLE	HD-50390-4	1
ECM OVERLAY	HD-50390-4-P	1

Table 1. DTC P0503 Diagnostic Faults

POSSIBLE CAUSES
Short to voltage in signal circuit
Open ground
5V reference shorted to battery voltage

1. VSS Dirty or Damaged Test

1. Remove VSS.
2. Check for debris on the sensor tip.
3. Is debris present?
    a. **Yes.** Clean debris from VSS and install.
    b. **No.** Go to Test 2.

2. VSS Sensor Power Shorted to Voltage Test

1. Turn IGN OFF.
2. Disconnect VSS [65].
3. Turn IGN ON.
4. Using TEST CONNECTOR KIT (Part Number:HD-41404), test voltage between [65B] terminals A (R/W) wire and C (BK/GN) wire.
5. Is voltage greater than 6.0V?

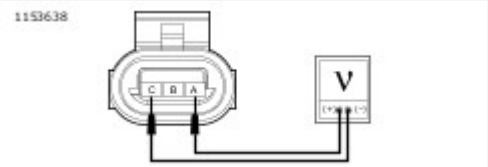

View interactive image

Figure 1.

    a. **Yes.** Repair short to voltage on (R/W) wire.
    b. **No.** Go to Test 3.

3. Signal Wire Short to Voltage Test

1. Test voltage between [65B] terminal B (LGN/Y) wire and ground.
2. Is voltage above 6.0V?

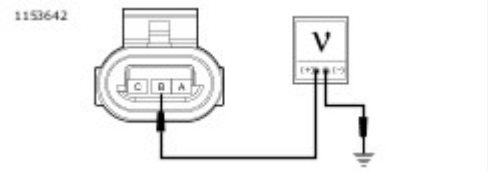

View interactive image

Figure 2.

a. **Yes.** Repair short to voltage on (LGN/Y) wire.
b. **No.** Go to Test 4.

4. VSS Ground Wire Open Test

1. Connect BREAKOUT BOX (Part Number:HD-50390-1) and ECM CABLE (Part Number:HD-50390-4) to wiring harness [78B-1], [78B-2] and [78B-3], leaving ECM [78A-1], [78A-2] and [78A-3] disconnected. See Initial Diagnostics → DIAGNOSTIC TOOLS.
2. Verify ECM OVERLAY (Part Number:HD-50390-4-P) is in position on BOB.
3. Test resistance between BOB [78-1] terminal 10 and [65B] terminal C (BK/GN) wire.
4. Is resistance less than 0.5 ohms?

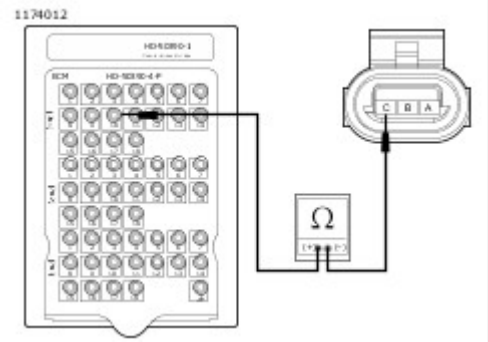

View interactive image

Figure 3.

a. **Yes.** Go to Test 5.
b. **No.** Repair open on (BK/GN) wire.

5. Signal Wire Shorted to Sensor Power Test

1. Test continuity between BOB [78-1] terminal 4 and [78-2] terminal 9.
2. Is continuity present?

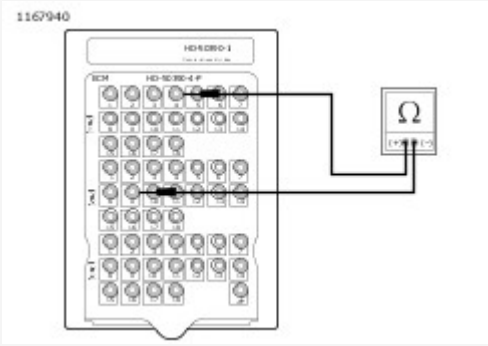

View interactive image

Figure 4.

a. **Yes.** Repair short between (LGN/Y) and (R/W) wires.
b. **No.** [Go to Test 6.]

6. VSS Test

1. Connect [78A-1], [78A-2] and [78A-3] to BOB.
2. Clear DTC.
3. Did DTC reset?
    a. **Yes.** Replace ECM.
    b. **No.** Replace VSS.

See Figure 1. The TCA uses a two wire DC motor to move the throttle plate from the spring loaded off-idle detent. The ECM supplies a pulse width modulated voltage signal through [78-3] terminals 8 and 9. The ECM monitors throttle position through the dual position sensors (TPS1 and TPS2). This code will set if the idle speed becomes unstable. This can be caused by a fuel or ignition related issue, throttle actuator friction or an intermittent air leak.

NOTE

Although the ECM monitors [78-3] terminals 8 and 9, faults on these terminals will not cause this DTC. Faults on these terminals will be higher priority DTCs, address them first.

Table 1. Code Description

DTC	DESCRIPTION
P0505	Idle speed control - unstable

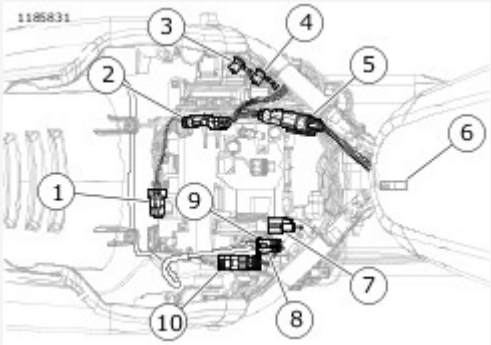

View interactive image

1	Purge solenoid [95]
2	Engine harness [145]
3	GND 1
4	GND 2
5	Backbone harness interconnect [327]
6	Engine harness interconnect [328]
7	Security antenna [209]
8	Left rear lighting [19]
9	Right rear lighting [18]
10	Tail lamp [40]

Figure 1. Under Seat

Diagnostic Tips

Before replacing the TCA, cycle the ignition four times when idle is high.

1. Start engine.
2. Increase rpm to 2500 rpm and bring engine back to idle.
3. Turn IGN OFF.
4. Repeat previous steps a total of four times.

This process will help the controller learn throttle plate position.

Connector Information

For additional information about the connectors in the following diagram(s) and diagnostic procedure(s), see [Wiring → Wire Harness Connectors → General](#).

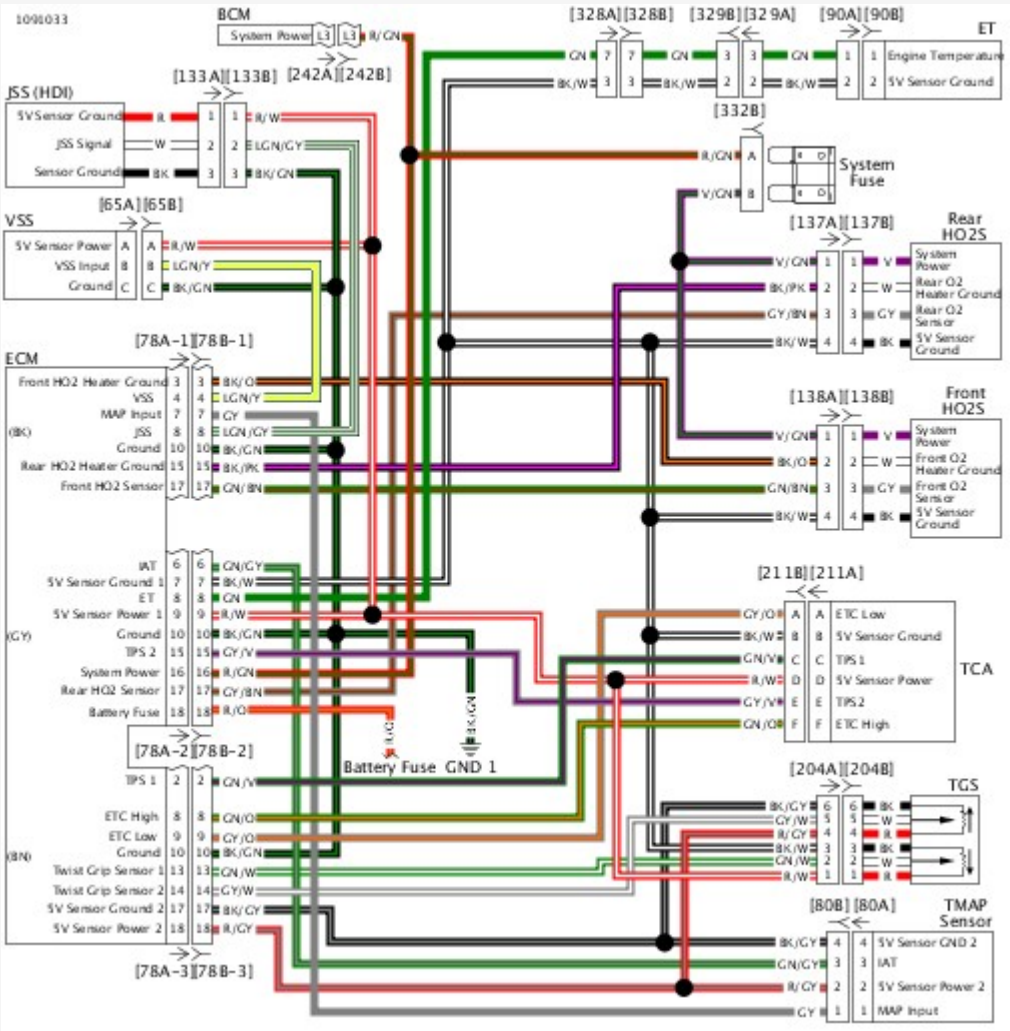

View interactive image

Figure 2. Sensor Circuit

Special Tools

Description	Part Number	Qty.
SPARK PLUG TESTER	HD-26792	1

Table 1. DTC P0505 Diagnostic Faults

POSSIBLE CAUSES
Vacuum/air leaks
Fuel system problems
Ignition system problems
Loss of engine compression

1. Preliminary Engine Tests

1. Verify battery connections are in good condition.
2. Verify fuel in the tank is fresh and not contaminated.
3. Verify spark plug wires are firmly connected to the coil and plugs.
4. Verify fuel injectors are not clogged.
5. Verify battery condition. See **Starting and Charging → BATTERY TESTING**.
6. Does battery pass tests?
    a. **Yes.** **Go to Test 2.**
    b. **No.** Charge or replace battery.

2. Vacuum Leak Test

1. Start the motorcycle and check for vacuum leaks.
2. Were any leaks found?
    a. **Yes.** Repair the vacuum leak.
    b. **No.** **Go to Test 3.**

3. Spark Present Test

1. Check spark plug condition. Replace if fouled.
2. Using **SPARK PLUG TESTER (Part Number:HD-26792)**, check spark at both plugs while cranking engine.
3. Is spark present?
    a. **Yes.** **Go to Test 4.**
    b. **No.** The spark plugs will not spark if there is low or no compression. If spark is not present, test compression before troubleshooting ignition circuit. Once good compression is confirmed, check condition of ignition coils, coil primary wiring and spark plug boots. See **Engine Management → CKP SENSOR DIAGNOSTICS**.

4. Compression Test

1. Perform compression test.
2. Does engine pass compression test?
    a. **Yes.** Go to Test 5.
    b. **No.** Repair engine loss of compression.

5. Fuel System Test

1. Check fuel system and perform fuel pressure test.
2. Does fuel pressure meet specification?
    a. **Yes.** Replace TCA.
    b. **No.** Inspect fuel inlet sock and fuel filter for obstruction. Inspect internal fuel hose for leaks. If no issues are found, replace fuel pump assembly.

See Figure 1 , Figure 2 , Figure 3 and Figure 4. The ECM supplies 5V to the TGS, JSS, TCA and VSS from [78-2] terminal 9. These sensors may have individual codes along with this code since they all share the 5V reference circuit.

- DTC P0641 is displayed when sensor power-1 is out of range. The 5V sensor power-1 circuit supplies the TCA, VSS, JSS and sensor 2 of the TGS with a 5V reference signal.
- DTC P0651 is displayed when sensor power-2 is out of range. The 5V sensor power-2 circuit supplies the TMAP sensor and sensor 1 of the TGS with a 5V reference signal.

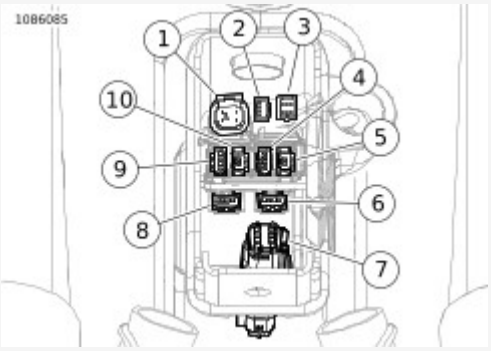

View interactive image

1	Headlamp [38]
2	Console [20]
3	TGS [204]
4	Right front lighting [31R]
5	Front WSS [167]
6	Left front lighting [31L]
7	USB caddy interconnect [329]
8	LHCM [24]
9	RHCM [22-1]
10	RHCM [22-2]

Figure 1. USB Caddy

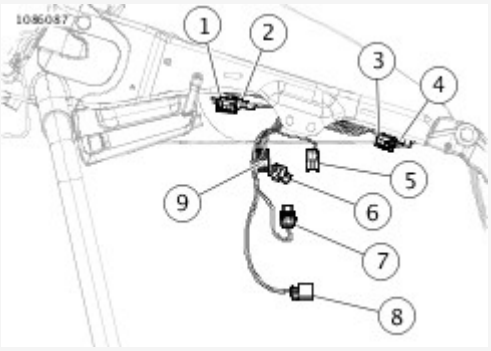

View interactive image

1	Front knock sensor [315]
2	Front ACR [203F]
3	Rear knock sensor [316]
4	Rear ACR [203R]
5	Rear injector [85]
6	TMAP [80]
7	Ignition coil [83]
8	Throttle control [211]
9	Front injector [84]

Figure 2. Engine

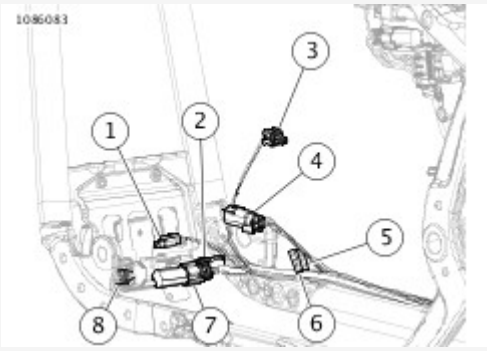

View interactive image

1	CKP [79]
2	Voltage regulator [77]
3	Oil pressure sensor [120]
4	Front HO2S [138]
5	Rear brake switch [121-1]
6	Rear brake switch [121-2]
7	JSS [133]
8	Stator [47]

Figure 3. Front of Engine: Typical

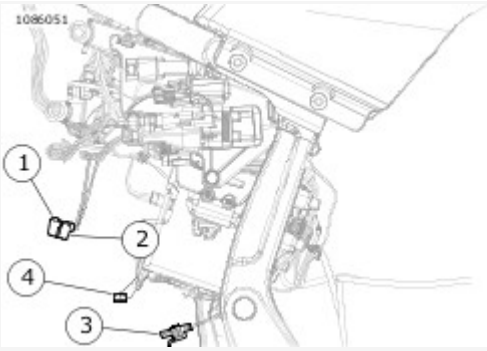

View interactive image

1	Neutral [131-1]
2	Neutral [131-2]
3	VSS [65]
4	Transmission GND

Figure 4. Top of Transmission

Table 1. Code Description

DTC	DESCRIPTION
P0641	5V reference out of range
P0651	5V reference 2 out of range

Any of these conditions will set these DTCs:

- Short to ground on the 5V sensor power circuit.
- Short to voltage on the 5V sensor power circuit.
- VSS fault or malfunction.
- TMAP sensor fault or malfunction.
- TCA fault or malfunction.
- JSS (HDI) fault or malfunction.
- TGS fault or malfunction.

Connector Information

For additional information about the connectors in the following diagram(s) and diagnostic procedure(s), see **Wiring → Wire Harness Connectors → General**.

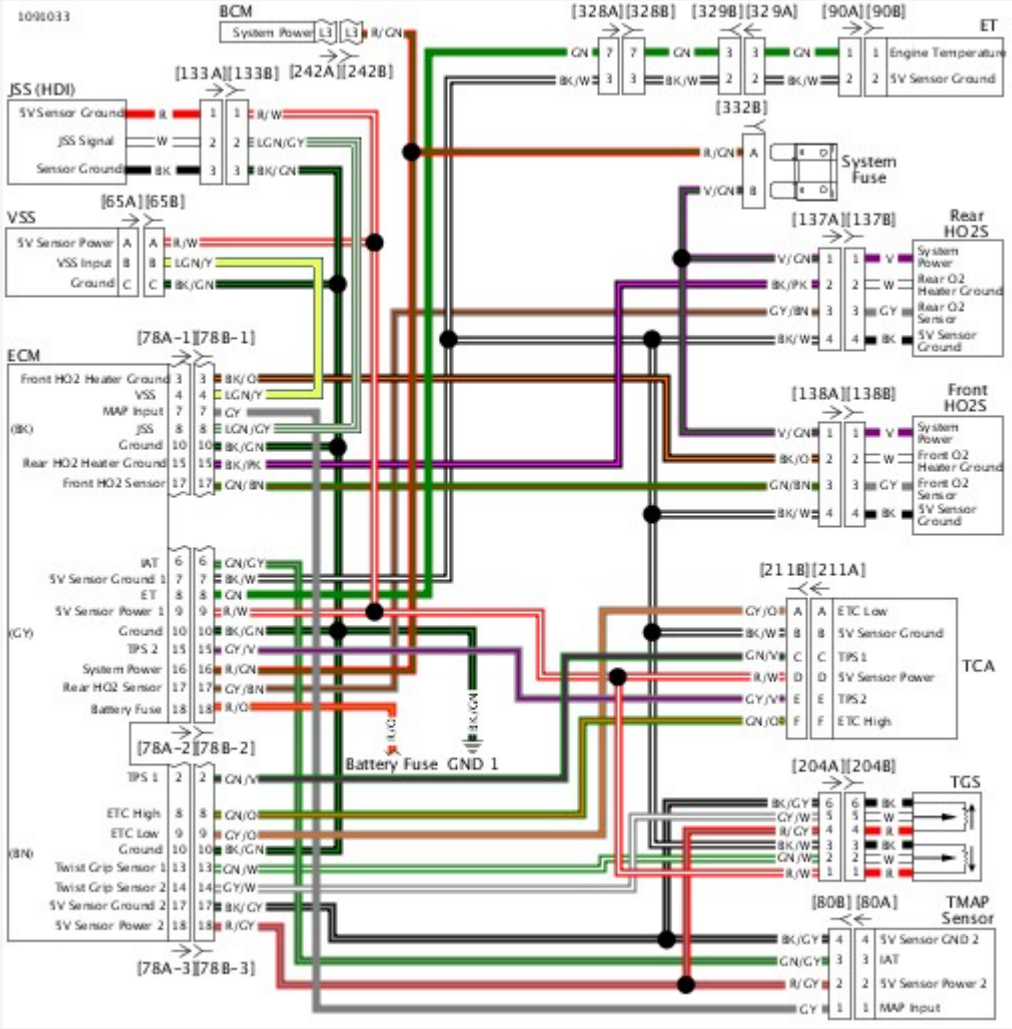

View interactive image

Figure 5. Sensor Circuit

Special Tools

Description	Part Number	Qty.
TEST CONNECTOR KIT	HD-41404	1
BREAKOUT BOX	HD-50390-1	1
ECM CABLE	HD-50390-4	1
ECM OVERLAY	HD-50390-4-P	1

Table 1. DTC P0641 Diagnostic Faults

POSSIBLE CAUSES
Short to ground on the 5V sensor power circuit
Short to voltage on the 5V sensor power circuit
VSS fault or malfunction
TGS fault or malfunction
TCA fault or malfunction
JSS (HDI) fault or malfunction

1. 5V Sensor Short to Voltage Test

1. Turn IGN OFF.
2. Connect **BREAKOUT BOX (Part Number:HD-50390-1)** and **ECM CABLE (Part Number:HD-50390-4)** between wiring harness [78B-1], [78B-2] and [78B-3], and ECM [78A-1], [78A-2] and [78A-3]. See **Initial Diagnostics → DIAGNOSTIC TOOLS**.
3. Verify **ECM OVERLAY (Part Number:HD-50390-4-P)** is in position on BOB.
4. Turn IGN ON.
5. Using **TEST CONNECTOR KIT (Part Number:HD-41404)**, test voltage between BOB [78-2] terminal 9 and ground.
6. Is voltage between 4-6V?

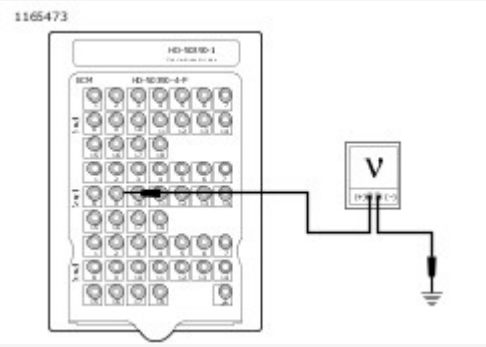

View interactive image

Figure 1.

a. **Yes.** Concern is intermittent. See [Initial Diagnostics → DIAGNOSTICS AND TROUBLESHOOTING → Wiggle Test].
b. **No, greater than 6V.** Repair short to voltage on (R/W) wire.
c. **No, less than 4V.** [Go to Test 2.]

2. TCA Test

1. Turn IGN OFF.
2. Disconnect TCA [211].
3. Turn IGN ON.
4. Test voltage between BOB [78-2] terminal 9 and terminal 7.
5. Is voltage less than 4V?

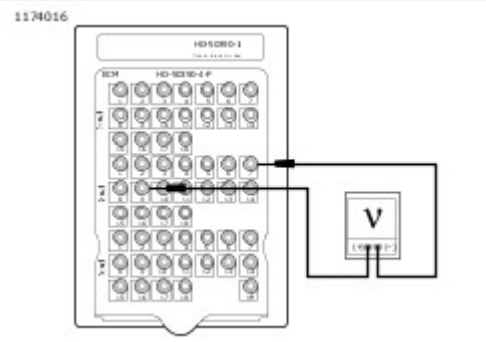

View interactive image

Figure 2.

a. **Yes.** [Go to Test 3.]
b. **No.** Replace TCA.

3. TGS Power Circuit Below Range Test

1. Turn IGN OFF.
2. Disconnect TGS [204].
3. Turn IGN ON.
4. Test voltage between BOB [78-2] terminals 9 and 10.
5. Is voltage less than 4V?

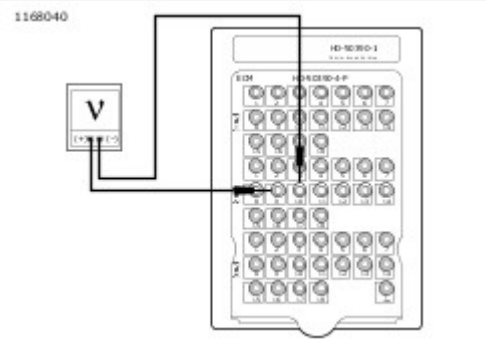

View interactive image

Figure 3.

a. **Yes.** Go to Test 4.
b. **No.** Replace TGS.

4. VSS Circuit Below Range Test

1. Turn IGN OFF.
2. Disconnect VSS [65].
3. Turn IGN ON.
4. Test voltage between BOB [78-2] terminals 9 and 10.
5. Is voltage less than 4V?

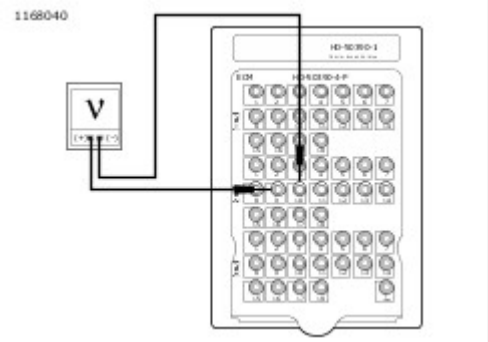

View interactive image

Figure 4.

a. **Yes, with JSS.** Go to Test 5.
b. **Yes, without JSS.** Go to Test 6.
c. **No.** Replace VSS.

5. JSS Circuit Below Range Test

1. Turn IGN OFF.
2. Disconnect JSS [133].
3. Turn IGN ON.
4. Test voltage between BOB [78-2] terminals 9 and 10.
5. See Figure 4. Is voltage less than 4V?
   a. **Yes.** Go to Test 6.
   b. **No.** Replace JSS.

6. Circuit Short to Ground Test

1. Disconnect ECM from BOB.
2. Test continuity between BOB [78-2] terminal 9 and ground.
3. Is continuity present?

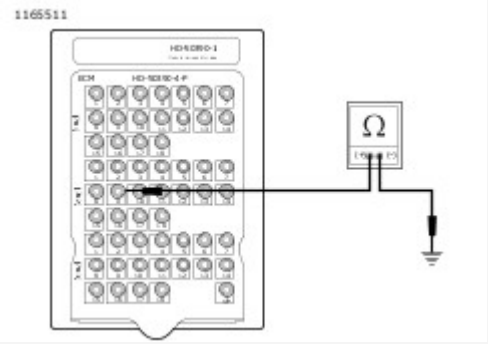

View interactive image

Figure 5.

a. **Yes.** Repair short to ground in (R/W) wire.
b. **No.** [Go to Test 7.]

7. Circuit Shorted to Sensor Ground Circuit Test

1. Test continuity between BOB [78-2] terminals 9 and 7.
2. Is continuity present?

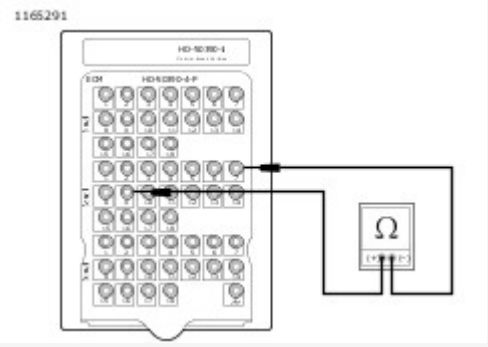

View interactive image

Figure 6.

a. **Yes.** Repair short between (R/W) and (BK/W) wires.
b. **No.** Replace ECM.

Special Tools

Description	Part Number	Qty.
TEST CONNECTOR KIT	HD-41404	1
BREAKOUT BOX	HD-50390-1	1
ECM CABLE	HD-50390-4	1
ECM OVERLAY	HD-50390-4-P	1

Table 1. DTC P0651 Diagnostic Faults

POSSIBLE CAUSES
Short to ground on the 5V sensor power circuit
Short to voltage on the 5V sensor power circuit
TMAP sensor fault or malfunction
TGS fault or malfunction

1. 5V Sensor Short to Voltage Test

1. Turn IGN OFF.
2. Connect **BREAKOUT BOX (Part Number:HD-50390-1)** and **ECM CABLE (Part Number:HD-50390-4)** between wiring harness [78B-1] and [78B-2] and ECM [78A-1] and [78A-2]. See **Initial Diagnostics → DIAGNOSTIC TOOLS**.
3. Verify **ECM OVERLAY (Part Number:HD-50390-4-P)** is in position on BOB.
4. Turn IGN ON.
5. Using **TEST CONNECTOR KIT (Part Number:HD-41404)**, test voltage between BOB [78-3] terminal 18 and ground.
6. Is voltage between 4-6V?

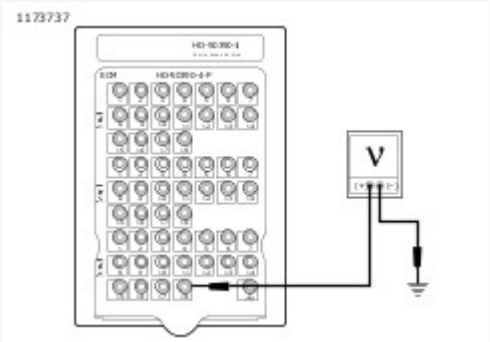

View interactive image

Figure 1.

a. **Yes.** Concern is intermittent. See **Initial Diagnostics → DIAGNOSTICS AND TROUBLESHOOTING → Wiggle Test**.
b. **No, greater than 6V.** Repair short to voltage on (R/GY) wire.
c. **No, less than 4V.** **Go to Test 2.**

2. TGS Circuit Below Range Test

1. Turn IGN OFF.
2. Disconnect TGS [204].
3. Turn IGN ON.
4. Test voltage between BOB [78-3] terminals 18 and 10.
5. Is voltage less than 4V?

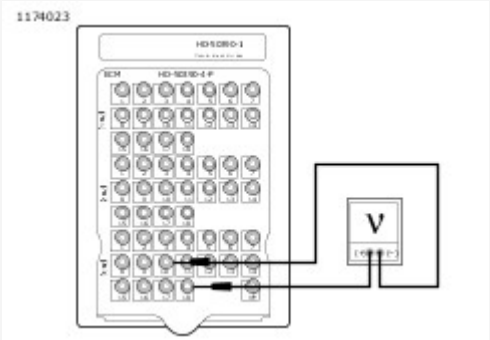

View interactive image

Figure 2.

a. **Yes.** Go to Test 3.
b. **No.** Replace TGS.

3. TMAP Power Circuit Below Range Test

1. Turn IGN OFF.
2. Disconnect TMAP sensor [80].
3. Turn IGN ON.
4. Test voltage between BOB [78-3] terminals 18 and 10.
5. See Figure 2. Is voltage less than 4V?
   a. **Yes.** Go to Test 4.
   b. **No.** Replace TMAP sensor.

4. Circuit Short to Ground Test

1. Disconnect ECM from BOB.
2. Test continuity between BOB [78-3] terminal 18 and ground.
3. Is continuity present?

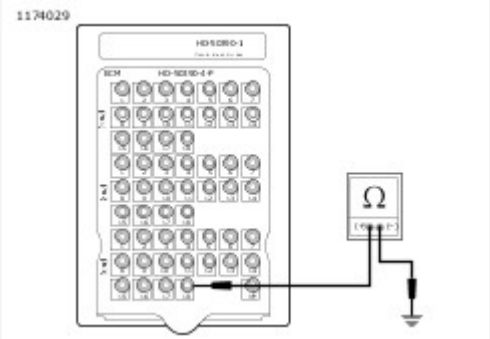

View interactive image

Figure 3.

a. **Yes.** Repair short to ground in (R/GY) wire.
b. **No.** [Go to Test 5.](#)

5. Circuit Shorted to Sensor Ground Circuit Test

1. Test continuity between BOB [78-3] terminals 17 and 18.
2. Is continuity present?

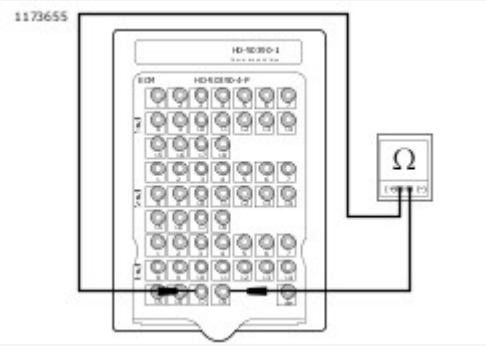

View interactive image

Figure 4.

a. **Yes.** Repair short between (R/GY) and (BK/GY) wires.
b. **No.** Replace ECM.

See Figure 1. The DTCs listed indicate a failure which requires replacement of the ECM. Refer to Table 1.

NOTE

After replacing ECM, perform password learning procedure and clear DTCs using odometer self-diagnostics. See Initial Diagnostics → Initial Diagnostics → Odometer Self-Diagnostics.

Table 1. Code Description

DTC	DESCRIPTION
P0603	ECM EEPROM memory error
P0605	ECM flash memory error
U0300	Internal control module software incompatibility

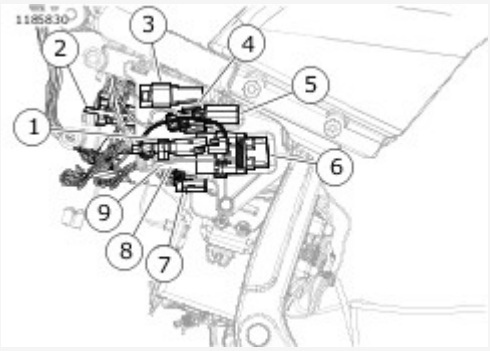

View interactive image

1	Battery tender [281]
2	DLC [91]
3	Termination resistor [319]
4	P&A accessory [325]
5	Fuse holder [332]
6	Fuse block [64]
7	ECM [78-3]
8	ECM [78-2]
9	ECM [78-1] (behind sub caddy)

Figure 1. Behind Left Side Cover

DTC P0603 Test

1. Clear DTCs.
2. Turn IGN ON.
3. Check DTCs.
4. Did DTC reset?
    a. **Yes.** Replace ECM.
    b. **No.** System operating properly.

DTC P0605 Test

1. Clear DTCs.
2. Attempt to program ECM using correct calibration.
3. Start engine.
4. Check DTCs.
5. Did DTC reset?
    a. **Yes.** Replace ECM.
    b. **No.** System operating properly.

Special Tools

Description	Part Number	Qty.
DIGITAL TECHNICIAN II	HD-48650	1

TGS2 Validation

Within the ECM, there are two independent Analog/Digital (A/D) converter modules used to validate the input of Twist Grip Sensor 2 (TGS2). TGS2 inputs are sent into both converter modules and if the output of the two readings are not within the designated value of each other for a specified time, then DTC P1270 fault is initiated.

Unless the ECM has a poor or intermittent connection, DTC P1270 indicates the ECM is defective and requires replacement.

NOTE

After replacing the ECM, perform password learning procedure using **DIGITAL TECHNICIAN II (Part Number:HD-48650)** and clear codes.

Table 1. Code Description

DTC	DESCRIPTION
P1270	TGS 2 A/D validation error

Table 1. DTC P1270 Diagnostic Faults

POSSIBLE CAUSES
ECM internal fault

1. DTC P1270 Test

1. Clear DTCs.
2. Turn IGN ON.
3. Check DTCs.
4. Did DTC reset?
    a. **Yes.** Replace ECM.
    b. **No.** System operating properly.

Special Tools

Description	Part Number	Qty.
DIGITAL TECHNICIAN II	HD-48650	1

Password Problem

See Figure 1. The ECM and BCM exchange passwords during operation. An incorrect password sets a DTC. If any U-codes exist, troubleshoot the higher priority codes prior to performing the tests in this section. Refer to Initial Diagnostics → Initial Diagnostics → Diagnostics.

NOTE

Vehicle will not start if BCM is disconnected.

Table 1. Code Description

DTC	DESCRIPTION
P1009	VTD disabled fuel due to bad password

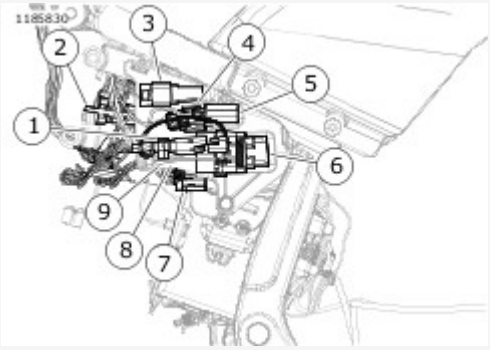

View interactive image

1	Battery tender [281]
2	DLC [91]
3	Termination resistor [319]
4	P&A accessory [325]
5	Fuse holder [332]
6	Fuse block [64]
7	ECM [78-3]
8	ECM [78-2]

9	ECM [78-1] (behind sub caddy)

Figure 1. Behind Left Side Cover

Diagnostic Tips

This code will usually appear after replacing the ECM or BCM. **New** modules must be programmed using **DIGITAL TECHNICIAN II (Part Number:HD-48650)**. After parts are programmed and matched correctly for specific vehicle, clear codes.

Special Tools

Description	Part Number	Qty.
DIGITAL TECHNICIAN II	HD-48650	1

Table 1. DTC P1009 Diagnostic Faults

POSSIBLE CAUSES
ECM malfunction
BCM malfunction

1. Incorrect Password Test

1. Using **DIGITAL TECHNICIAN II (Part Number:HD-48650)**, attempt to calibrate the ECM using the module replace feature found in vehicle set up.
2. Clear DTCs.
3. Turn IGN OFF.
4. Check DTCs.
5. Did DTC reset?
    a. **Yes.** **Go to Test 2.**
    b. **No.** System operating properly.

2. BCM Replacement Test

1. Turn IGN OFF.
2. Replace BCM.
3. Attempt to calibrate the BCM using the module replace feature found in vehicle set-up.
4. Clear DTCs.
5. Turn IGN OFF.
6. Check DTCs.
7. Did DTC reset?
    a. **Yes.** Install original BCM and replace ECM.
    b. **No.** System operating properly.

See **Figure 1**. The jiffy stand sensor (JSS) uses a Hall-effect sensor to monitor jiffy stand position.

- When the jiffy stand is fully retracted the sensor picks up the presence of the metal tab mounted to the jiffy stand. The metal tab is moved away from the sensor as the jiffy stand is extended.
- When the jiffy stand is extended the engine will only start and run if the BCM determines the transmission is in neutral. This is done by monitoring the neutral switch input to the BCM and communicating that input over the CAN bus circuit to the ECM.

The JSS is powered and monitored by the ECM. The ECM supplies the 5V reference to the JSS. The JSS sends a signal back to the ECM. This signal is used by the ECM to determine when the jiffy stand is retracted or extended. The JSS is grounded through the ECM.

The JSS also has a Fail Enable Mode. This mode allows the engine to start and run if the system recognizes a problem with the JSS circuit. When a problem exists or if the transmission is put in gear with the jiffy stand extended the odometer will display "SIdE Stand." DTC P1501 or P1502 will set if the JSS circuits are out of range.

NOTE

The ECM supplies 5V reference voltage to the VSS, TCA and TGS in addition to the JSS. Problems on the 5V reference will cause other DTCs.

Table 1. Code Description

DTC	DESCRIPTION
P1501	JSS low
P1502	JSS high/open

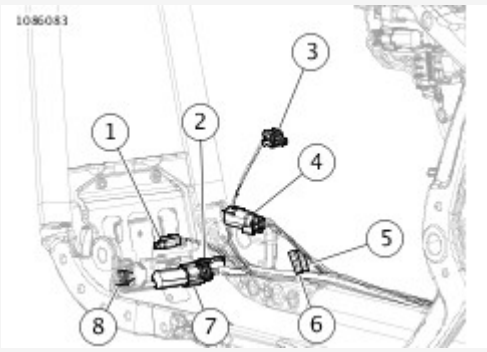

View interactive image

1	CKP [79]
2	Voltage regulator [77]
3	Oil pressure sensor [120]
4	Front HO2S [138]
5	Rear brake switch [121-1]
6	Rear brake switch [121-2]
7	JSS [133]

8	Stator [47]

Figure 1. Front of Engine: Typical

Diagnostic Tips

When disconnecting any connectors always inspect connector for corrosion or backed out terminals and repair as required.

Connector Information

For additional information about the connectors in the following diagram(s) and diagnostic procedure(s), see [Wiring → Wire Harness Connectors → General](#).

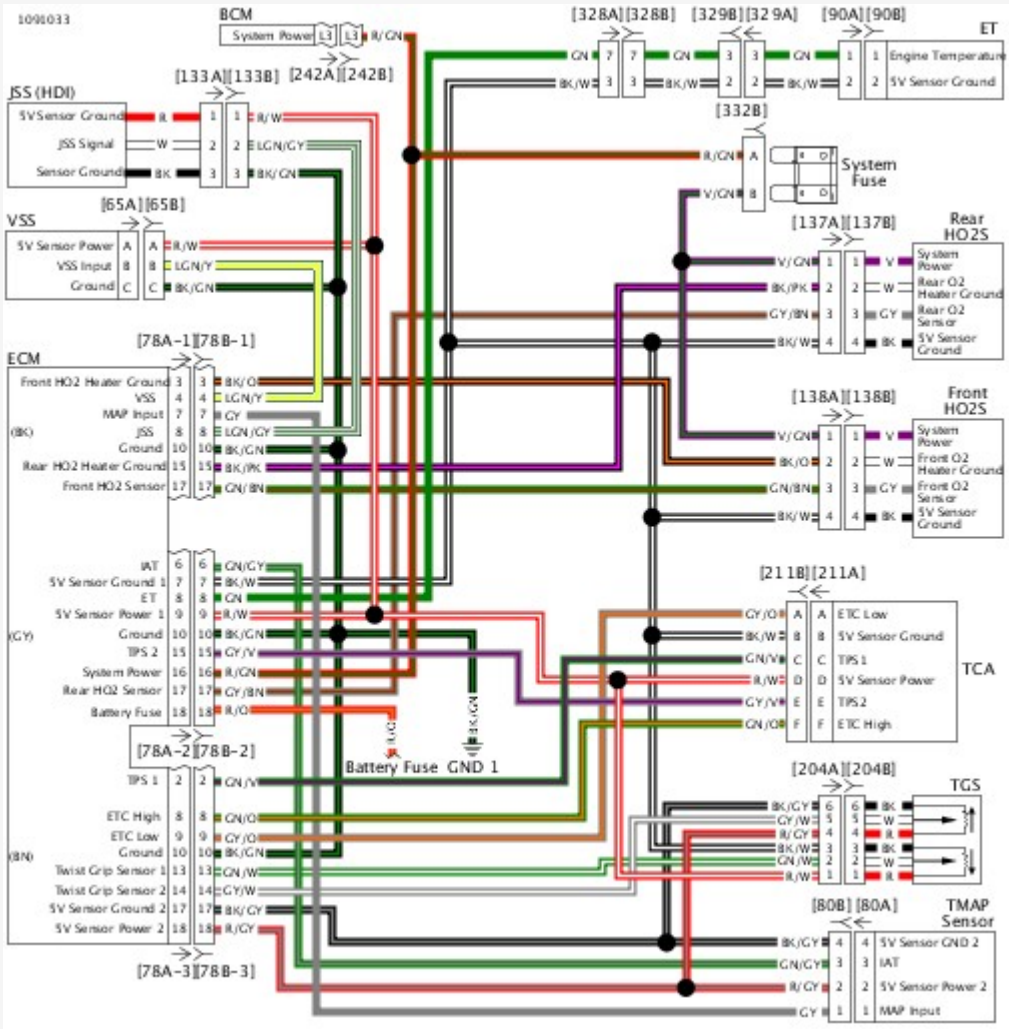

View interactive image

Figure 2. Sensor Circuit

Table 1. DTC P1501 Diagnostic Faults

POSSIBLE CAUSES
Short to ground in signal circuit

1. Signal Wire Shorted to Ground Test

1. Turn IGN OFF.
2. Disconnect JSS [133].
3. Test continuity between [133B] terminal 2 (LGN/GY) wire and ground.
4. Is continuity present?

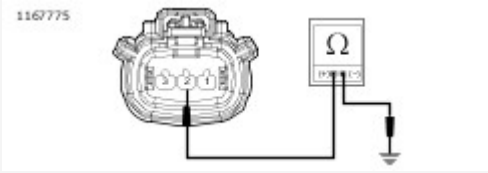

View interactive image

Figure 1.

a. **Yes.** Repair short to ground on (LGN/GY) wire.
b. **No.** Replace JSS.

Special Tools

Description	Part Number	Qty.
TEST CONNECTOR KIT	HD-41404	1
BREAKOUT BOX	HD-50390-1	1
ECM CABLE	HD-50390-4	1
ECM OVERLAY	HD-50390-4-P	1

Table 1. DTC P1502 Diagnostic Faults

POSSIBLE CAUSES
Short to voltage in signal circuit
Open ground
Short between 5V reference circuit and signal circuit
Open in signal circuit

1. JSS Ground Wire Test

1. Turn IGN OFF.
2. Disconnect JSS [133].
3. Using **TEST CONNECTOR KIT (Part Number:HD-41404)**, test resistance between [133B] terminal 3 and ground.
4. Is resistance less than 0.5 ohm?

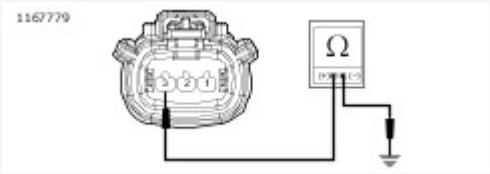

View interactive image

Figure 1.

a. **Yes.** Go to Test 2.
b. **No.** Repair open in (BK/GN) wire.

2. JSS Signal Wire Short to Voltage Test

1. Turn IGN ON.
2. Test voltage between [133B] terminal 2 (LGN/GY) wire and ground.
3. Is voltage greater than 5V?

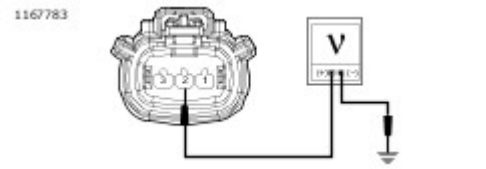

View interactive image

Figure 2.

a. **Yes.** Repair short to voltage on (LGN/GY) wire.
b. **No.** [Go to Test 3.]

3. 5V Reference and Signal Shorted Together Test

1. Turn IGN OFF.
2. Disconnect ECM [78-1], [78-2] and [78-3].
3. Test continuity between [133B] terminals 1 (R/W) wire and 2 (LGN/GY) wire.
4. Is continuity present?

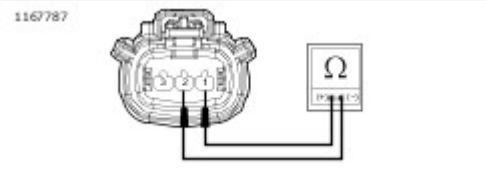

View interactive image

Figure 3.

a. **Yes.** Repair short between (R/W) and (LGN/GY) wires.
b. **No.** [Go to Test 4.]

4. Signal Wire Open Circuit Test

1. Connect [BREAKOUT BOX (Part Number:HD-50390-1)] and [ECM CABLE (Part Number:HD-50390-4)] to wiring harness [78B-1], [78B-2] and [78B-3], leaving ECM [78A-1], [78A-2] and [78A-3] disconnected. See [Initial Diagnostics → DIAGNOSTIC TOOLS].
2. Verify [ECM OVERLAY (Part Number:HD-50390-4-P)] is in position on BOB.
3. Test resistance between BOB [78-1] terminal 8 and [133B] terminal 2 (LGN/GY) wire.
4. Is resistance less than 0.5 ohm?

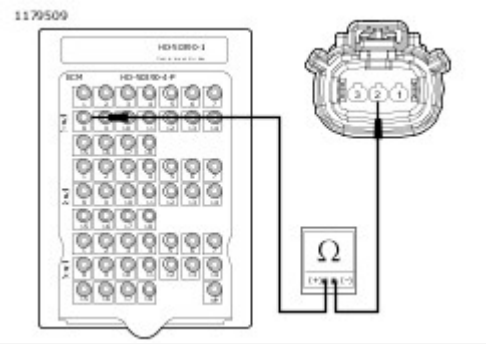

View interactive image

Figure 4.

a. **Yes.** Replace JSS.
b. **No.** Repair open on (LGN/GY) wire.

Special Tools

Description	Part Number	Qty.
TEST CONNECTOR KIT	HD-41404	1
BREAKOUT BOX	HD-50390-1	1
ECM CABLE	HD-50390-4	1
ECM OVERLAY	HD-50390-4-P	1

Table 1. Side Stand Displayed on Speedometer Diagnostic Faults

POSSIBLE CAUSES
Jiffy stand is down
Jiffy stand out of adjustment
Open 5V sensor power wire

1. Starts, Then Stalls Test

1. Start engine.
2. Does engine start and stall?
    a. **Yes.** See Engine Management → STARTS, THEN STALLS.
    b. **No.** Go to Test 2.

2. Neutral Test

1. Verify transmission is in neutral.
2. Is neutral indicator illuminated?
    a. **Yes.** Go to Test 3.
    b. **No.** See Instruments → INDICATOR LAMPS.

3. JSS Clearance Test

1. Inspect JSS and jiffy stand for correct mounting and clearance to jiffy stand tab.
2. Is clearance less than 4.6 mm (0.18 in)?
    a. **Yes.** Go to Test 4.
    b. **No.** Install JSS and jiffy stand correctly.

4. 5V Reference Open Circuit Test

1. Turn IGN OFF.
2. Disconnect JSS [133].

3. Connect **BREAKOUT BOX (Part Number:HD-50390-1)** and **ECM CABLE (Part Number:HD-50390-4)** to wiring harness [78B-1], [78B-2] and [78B-3], leaving ECM [78A-1], [78A-2] and [78A-3] disconnected. See **Initial Diagnostics → DIAGNOSTIC TOOLS**.
4. Verify **ECM OVERLAY (Part Number:HD-50390-4-P)** is in position on BOB.
5. Using **TEST CONNECTOR KIT (Part Number:HD-41404)**, test resistance between BOB [78-2] terminal 9 and [133B] terminal 1 (R/W) wire.
6. Is resistance less than 0.5 ohm?

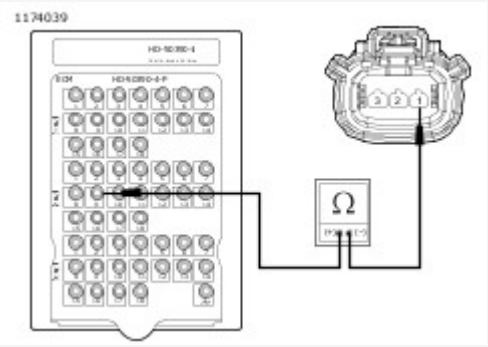

View interactive image

Figure 1.

a. **Yes.** Replace JSS.
b. **No.** Repair open on (R/W) wire.

Throttle Control Actuator Management

The ECM constantly monitors throttle actuation and throttle plate positioning. Several features are programmed into the ECM to limit performance when an error or fault in throttle actuation is detected. These DTCs always accompany another code. Refer to Table 1.

Table 1. Code Description

DTC	DESCRIPTION
P1510	ETC limited performance mode
P1511	ETC power management mode
P1512	ETC forced idle mode

Performance limitations are identified by code, as follows:

- **P1510 Limited Performance:** Enables near normal operation of the vehicle, guarding against inadvertent wide open throttle conditions. Typically this code is the result if one of the TGS or TP sensors, or one of each, has failed.
- **P1511 Power Management:** Provides more limitation on driveability, due to failure of the TCA, without a TGS, TMAP or airflow faults. The TCA is de-energized and the throttle plate returns to its idle detent position. The ECM monitors the operation of the TGS and adjusts the spark advance and cylinder shutoff/rev limiting, allowing the vehicle to reach traffic speeds (limp-home).
- **P1512 Forced Idle Mode:** Provides extreme limitation of driveability, due to a failure of both TGS, TGS validation error or failure of one TGS and the brake switch. The TCA is de-energized and the throttle plate is forced to a fast idle position providing enough torque to operate at a high idle speed.

Table 1. DTC P1510, P1511, P1512 Diagnostic Faults

POSSIBLE CAUSES
Other DTCs set

1. DTC Verification Test

1. Clear DTCs.
2. Start and run engine for a few seconds.
3. Cycle the engine on and off, for a few seconds each time a total of three times.
4. Did DTC P1510, P1511 or P1512 set with no other DTCs?
    a. **Yes.** Replace ECM.
    b. **No, other DTCs set.** Refer to **Initial Diagnostics → Initial Diagnostics → Diagnostics**.
    c. **No, no DTCs set.** DTC was properly cleared.

Air Flow Fault

The ECM uses the TMAP sensor to monitor air flow past the throttle plate. This ensures proper throttle plate positioning when the throttle is released and allowed to return to the unpowered position. The unpowered position is typically 7% of throttle plate range.

In order to avoid inconsistent readings at low rpm (or at idle), testing air flow is only performed at engine speeds above normal idle (10% of throttle plate range or approximately 1300 rpm).

The ECM compares the intake manifold pressure value from the TMAP to the throttle plate position value from the TPS. DTC P1514 sets if the manifold pressure is higher than it should be for that given throttle plate position. If a TMAP sensor error is present, then the ECM does not check P1514 parameters and instead P2105 (forced shutdown mode) is initiated, shutting down the fuel pump and fuel injectors. See **Engine Management → DTC P2105, P2107**. The ECM only checks for DTC P1514 if power management mode (DTC P1511) is present.

The ECM uses a main microprocessor and a monitoring microcontroller to communicate with the throttle actuation control system.

The microcontroller monitors the main microprocessor of the ECM. When a communication failure is identified, the microcontroller shuts down the TCA and fuel injectors.

An internal ignition delay timer monitors when the ignition circuit is energized. The microcontroller issues DTC P1600 if no communication is established between the main microprocessor or if a monitoring failure occurs within three consecutive ignition cycles.

Table 1. Code Description

DTC	DESCRIPTION
P1514	TCA airflow error
P1600	TCA internal error

Table 1. DTC P1514 Diagnostic Faults

POSSIBLE CAUSES
Other DTCs set

1. DTC Verification Test

1. Clear DTCs.
2. Start and run the engine for a few seconds.
3. Cycle engine on and off, for a few seconds each time a total of three times.
4. Did DTC P1514 set with no other DTCs?
    a. **Yes.** Replace ECM.
    b. **No, other DTCs set.** Refer to **Initial Diagnostics → Initial Diagnostics → Diagnostics**.
    c. **No, no DTCs set.** DTC was properly cleared.

Table 1. DTC P1600 Diagnostic Faults

POSSIBLE CAUSES
Other DTCs set

1. DTC Verification Test

1. Clear DTCs.
2. Start and run the engine for a few seconds.
3. Cycle engine on and off, for a few seconds each time a total of three times.
4. Did DTC P1600 set with no other DTCs?
    a. **Yes.** Replace ECM.
    b. **No, other DTCs set.** Refer to **Initial Diagnostics → Initial Diagnostics → Diagnostics**.
    c. **No, no DTCs set.** DTC was properly cleared.

See Figure 1. The automatic compression release (ACR) is opened and closed by the ECM to assist starting.

Table 1. Code Description

DTC	DESCRIPTION
P1655	ACR solenoid low/open
P1656	ACR solenoid shorted high

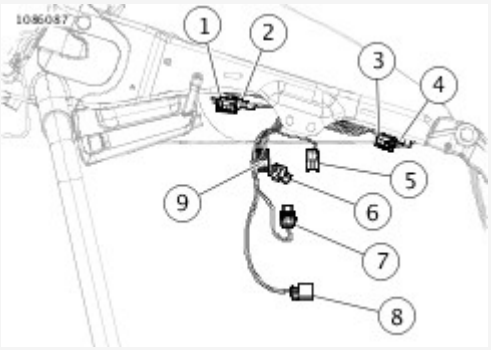

View interactive image

1	Front knock sensor [315]
2	Front ACR [203F]
3	Rear knock sensor [316]
4	Rear ACR [203R]
5	Rear injector [85]
6	TMAP [80]
7	Ignition coil [83]
8	Throttle control [211]
9	Front injector [84]

Figure 1. Engine

Diagnostic Tips

The ACR circuits are powered from the system power circuit. This circuit voltage is supplied by the BCM through the system power fuse. Any short causing the fuse to open will cause the ECM to set DTC P1655. If this code is present with an open fuse the fault is a short to ground somewhere in the circuit or the components.

Connector Information

For additional information about the connectors in the following diagram(s) and diagnostic procedure(s), see [Wiring → Wire Harness Connectors → General](#).

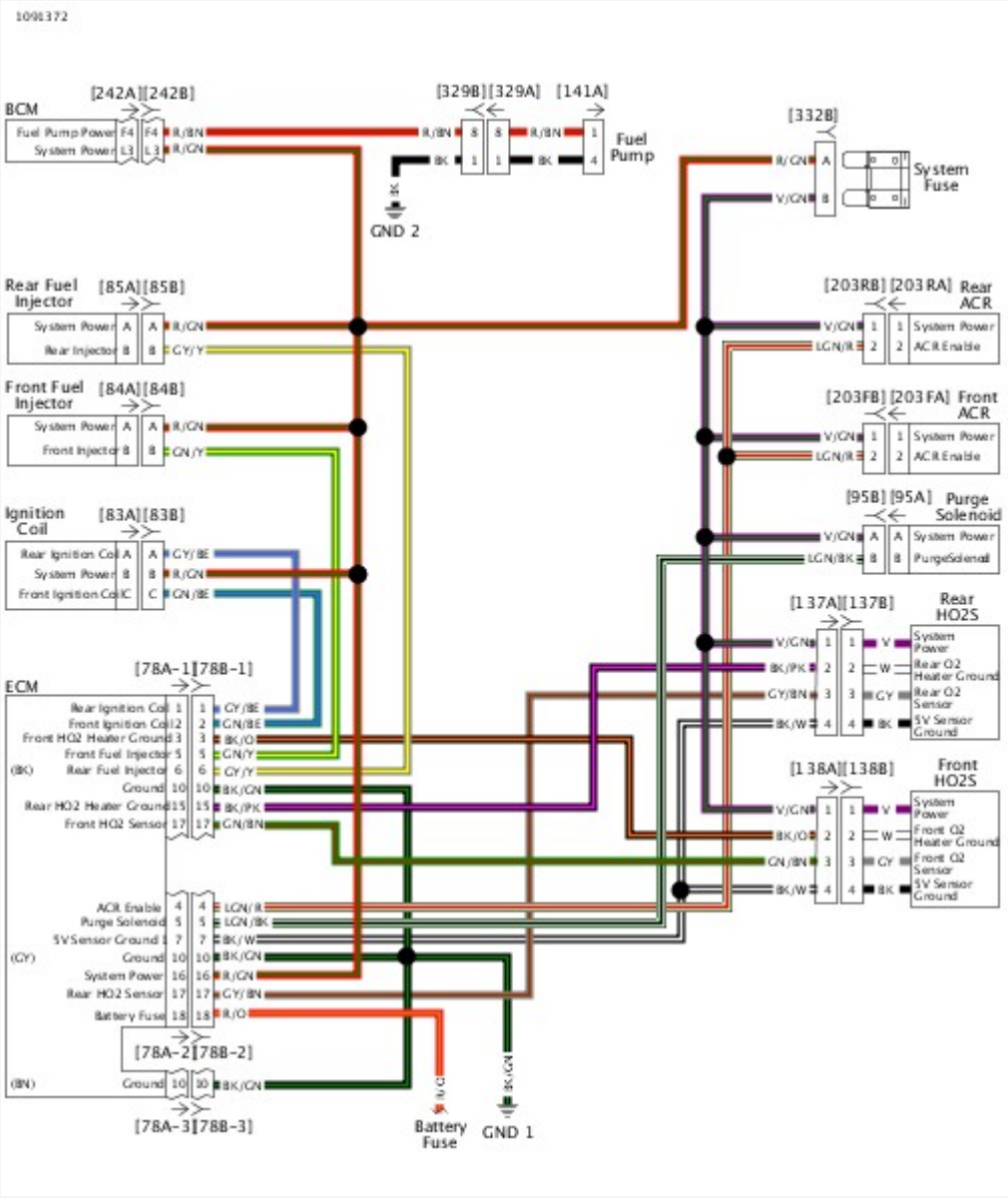

View interactive image

Figure 2. System Power Circuit

Special Tools

Description	Part Number	Qty.
FUEL INJECTOR TEST LIGHT	HD-34730-2E	1
TEST CONNECTOR KIT	HD-41404	1
BREAKOUT BOX	HD-50390-1	1
ECM CABLE	HD-50390-4	1
ECM OVERLAY	HD-50390-4-P	1

Table 1. DTC P1655 Diagnostic Faults

POSSIBLE CAUSES
ACR solenoid malfunction
Open in ACR control circuit
Open in system power circuit
Short to ground in ACR control circuit

1. Front ACR Test

1. Turn IGN OFF.
2. Disconnect front ACR [203F].
3. Connect **FUEL INJECTOR TEST LIGHT (Part Number:HD-34730-2E)**.
4. Crank engine for 5 seconds.
5. Does the test light flash on and off?
    a. **Yes.** Go to Test 2.
    b. **No, test light stays on steady.** Go to Test 4.
    c. **No, did not stay on steady.** Go to Test 6.

2. Rear ACR Test

1. Turn IGN OFF.
2. Disconnect rear ACR [203R].
3. Connect **FUEL INJECTOR TEST LIGHT (Part Number:HD-34730-2E)**.
4. Crank engine for 5 seconds.
5. Does the test light flash on and off?
    a. **Yes.** Replace front and rear ACR solenoids.
    b. **No.** Go to Test 3.

3. Rear ACR Control Circuit Test

1. Turn IGN OFF.
2. Disconnect test light.
3. Using **TEST CONNECTOR KIT (Part Number:HD-41404)**, test continuity between [203FB] terminal 1 (V/GN) wire and [203RB] terminal 1 (V/GN) wire.
4. Is continuity present?

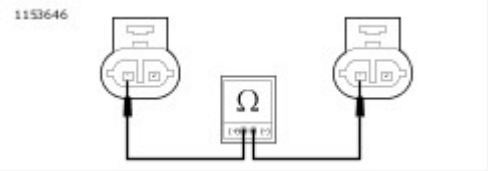

View interactive image

Figure 1.

a. **Yes.** Repair open in (LGN/R)wire.
b. **No.** Repair open in (V/GN) wire.

4. Front ACR Control Circuit Short to Ground Test

1. Turn IGN OFF.
2. Disconnect ECM [78-2].
3. Using **TEST CONNECTOR KIT (Part Number:HD-41404)**, test continuity between [203FB] terminal 2 (LGN/R) wire and ground.
4. Is continuity present?

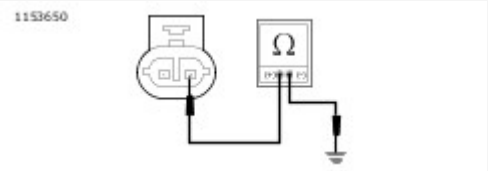

View interactive image

Figure 2.

a. **Yes.** **Go to Test 5.**
b. **No.** Replace ECM.

5. Rear ACR Control Circuit Short to Ground Test

1. Disconnect rear ACR [203RB].
2. Test continuity between [203FB] terminal 2 (LGN/R) wire and ground.
3. See **Figure 2**. Is continuity present?
   a. **Yes.** Repair short to ground in (LGN/R) wire.
   b. **No.** Replace front and rear ACR solenoids.

6. Shorted ACR Test

1. Turn IGN OFF.

2. Disconnect rear ACR [203RB].
3. Crank engine for 5 seconds.
4. Does the test light flash on and off?
    a. **Yes.** Replace front and rear ACR solenoids.
    b. **No.** Go to Test 7.

7. ACR Control Circuit Continuity Test

1. Turn IGN OFF.
2. Connect BREAKOUT BOX (Part Number:HD-50390-1) and ECM CABLE (Part Number:HD-50390-4) to wiring harness [78B-1], [78B-2] and [78B-3], leaving ECM [78A-1], [78A-2] and [78A-3] disconnected. See Initial Diagnostics → DIAGNOSTIC TOOLS.
3. Verify ECM OVERLAY (Part Number:HD-50390-4-P) is in position on BOB.
4. Using TEST CONNECTOR KIT (Part Number:HD-41404), test resistance between BOB [78-2] terminal 4 and [203FB] terminal 2 (LGN/R) wire.
5. Is resistance less than 0.5 ohm?

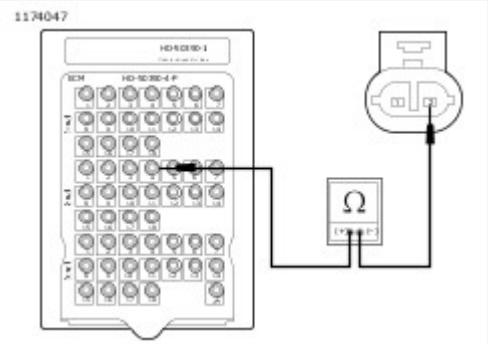

View interactive image

Figure 3.

    a. **Yes.** Go to Test 8.
    b. **No.** Repair open in (LGN/R) wire.

8. Power Circuit Continuity Test

1. Test resistance between BOB [78-2] terminal 16 and [203B] terminal 1 (V/GN) wire.
2. Is resistance less than 0.5 ohm?

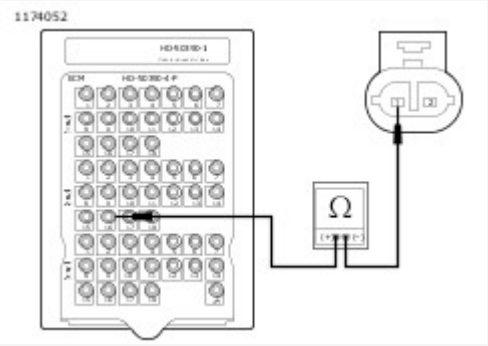

View interactive image

Figure 4.

a. **Yes.** Replace ECM.
b. **No.** Repair open in (V/GN) wire.

Special Tools

Description	Part Number	Qty.
FUEL INJECTOR TEST LIGHT	HD-34730-2E	1
TEST CONNECTOR KIT	HD-41404	1

Table 1. DTC P1656 Diagnostic Faults

POSSIBLE CAUSES
Short to voltage in ACR control circuit
ACR solenoid malfunction

1. Front ACR Test

1. Turn IGN OFF.
2. Disconnect front ACR [203F].
3. Connect **FUEL INJECTOR TEST LIGHT (Part Number:HD-34730-2E)**.
4. Crank engine for 5 seconds.
5. Does test light flash on and off?
    a. **Yes.** **Go to Test 2.**
    b. **No.** **Go to Test 4.**

2. Rear ACR Test

1. Turn IGN OFF.
2. Disconnect rear ACR [203R].
3. Disconnect test light from [203F].
4. Connect test light to [203R].
5. Crank engine for 5 seconds.
6. Does test light flash on and off?
    a. **Yes.** Replace front and rear ACR.
    b. **No.** **Go to Test 3.**

3. Rear ACR Control Circuit Test

1. Disconnect test light.
2. While cranking engine, using **TEST CONNECTOR KIT (Part Number:HD-41404)**, test voltage between [203RB] terminal 2 (LGN/R) wire and ground.
3. Is voltage greater than 5.0V?

Figure 1.

    a. **Yes.** Repair short to voltage on (LGN/R) wire.
    b. **No.** Replace ECM.

4. Front ACR Control Circuit Test

1. Disconnect rear ACR [203R].
2. While cranking engine, using **TEST CONNECTOR KIT (Part Number:HD-41404)**, test voltage between [203FB] terminal 2 (LGN/R) wire and ground.
3. Is voltage greater than 5.0V?

Figure 2.

a. **Yes.** Repair short to voltage on (LGN/R) wire.
b. **No.** Replace front and rear ACR.

See Figure 1 and Figure 2. Improper fuel system pressure may contribute to hesitation or loss of power.

Table 1. Code Description

DTC	DESCRIPTION
P1505	Power limit violation

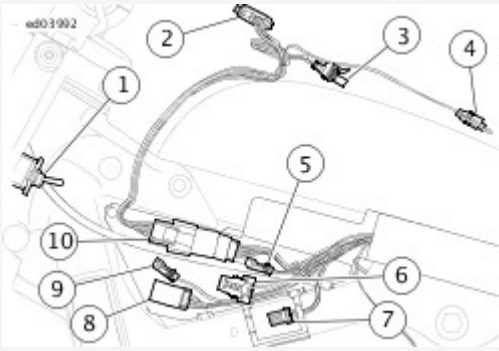

View interactive image

1	Auxiliary lamp switch (FLSTC, FLSTN)
2	Speedometer [39] (except FXSB)
3	Fuel pump [141]
4	Ignition switch [33] (except FXSB)
5	LHCM [24]
6	Front WSS [167]
7	Fuel gauge [117]
8	Headlamp [38]
9	Left front turn/auxiliary [31L] (except FLSTC, FLSTN) and fender tip [32] (FLSTC)
10	Console [20]

Figure 1. Under Fuel Tank Left Side

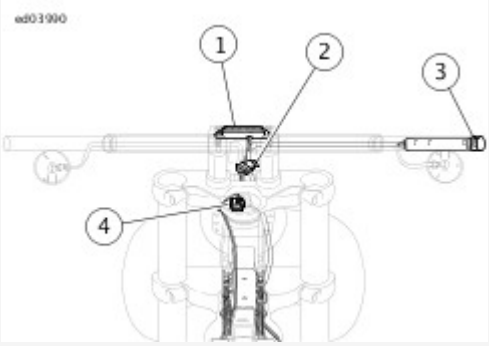

View interactive image

1	Indicators
2	Speedometer [39]
3	TGS
4	Fuel pump [141]

Figure 2. Handlebar: FXSB

Special Tools

Description	Part Number	Qty.
DIGITAL TECHNICIAN II	HD-48650	1

Table 1. DTC P1505 Diagnostic Faults

POSSIBLE CAUSES
Intake leak
Throttle plate damage

1. DTC Validation Test

1. Verify no other engine sensor DTCs are present.
2. Are other DTCs present?
    a. **Yes.** Diagnose other DTCs first.
    b. **No.** Go to Test 2.

2. Vacuum Leak Test

1. Start engine.
2. Check for vacuum leaks.
3. Are any leaks found?
    a. **Yes.** Repair vacuum leak.
    b. **No.** Go to Test 3.

3. Throttle Plate Test

1. Inspect throttle plate.
2. Has throttle plate been modified or damaged?
    a. **Yes.** Repair or replace throttle plate.
    b. **No.** Go to Test 4.

4. DTC Confirmation Test

1. Clear DTCs.
2. Using DIGITAL TECHNICIAN II (Part Number:HD-48650), attempt to calibrate ECM using module replace feature found in vehicle set up.
3. Did DTC return?
    a. **Yes.** Replace ECM.
    b. **No.** Repair complete.

Special Tools

Description	Part Number	Qty.
INLINE SPARK TESTER KIT	HD-51724	1

Table 1. Hesitation or Loss of Power Test Diagnostic Faults

POSSIBLE CAUSES
Loss of engine compression
Fuel system issues
Battery condition and connections
Spark plug condition
Air filter condition
Poor chassis ground connections
Performance modifications
Electrical modifications
Throttle valve malfunction

1. Preliminary Engine Tests

1. Verify battery connections are in good condition.
2. Verify fuel in the tank is fresh and not contaminated.
3. Verify spark plug wires are firmly connected the coil and plugs.
4. Verify fuel injectors are not clogged.
5. Verify battery condition. See **Starting and Charging → BATTERY TESTING**.
6. Does battery pass tests?
    a. **Yes.** **Go to Test 2.**
    b. **No.** Charge or replace battery.

2. Vacuum Leak Test

1. Start engine. Check for vacuum leaks.
2. Were any leaks found?
    a. **Yes.** Repair vacuum leak.
    b. **No.** **Go to Test 3.**

3. Spark Present Test

1. Check spark plug condition and replace if fouled.

2. Using **INLINE SPARK TESTER KIT (Part Number:HD-51724)**, check spark at both plugs while cranking engine.
3. Is spark present?
    a. **Yes.** Go to Test 4.
    b. **No.** The spark plugs will not spark if there is low or no compression. If spark is not present, test compression before troubleshooting ignition circuit. Once good compression is confirmed, check condition of ignition coils, coil primary wiring and spark plug boots. See **Engine Management → CKP SENSOR DIAGNOSTICS**.

4. Compression Test

1. Perform compression test.
2. Does engine pass compression test?
    a. **Yes.** Go to Test 5.
    b. **No.** Repair engine loss of compression.

5. Fuel System Test

1. Perform fuel pressure test.
2. Does fuel pressure meet specification?
    a. **Yes.** Inspect and clean throttle body and repair as needed.
    b. **No.** Inspect fuel inlet sock and fuel filter for obstruction. Inspect internal fuel hose for leaks. If no issues are found, replace fuel pump assembly.

Table 1. Starts Hard or Emits Black Smoke Diagnostic Faults

POSSIBLE CAUSES
Clogged air filter
Poor compression
Leaking injectors
Manifold leak

1. Air Filter Inspection

1. Inspect air filter.
2. Is air filter clean and in good condition?
    a. **Yes.** Go to Test 2.
    b. **No.** Replace air filter.

2. Compression Test

1. Perform compression test.
2. Is compression within normal specifications?
    a. **Yes.** Go to Test 3.
    b. **No.** Repair as needed.

3. Intake Leak Test

1. Perform intake leak test.
2. Did leak test pass?
    a. **Yes.** Go to Test 4.
    b. **No.** Repair as needed.

4. Fuel Injector Test

1. Inspect fuel injectors for mechanical failure.
2. Were any issues found?
    a. **Yes.** Repair as needed.
    b. **No.** Go to Test 5.

5. Throttle Cable Adjustment

1. Inspect throttle cable for correct adjustment.
2. Is throttle cable properly adjusted?
    a. **Yes. California models.** Go to Test 6.
    b. **Yes. Except California models.** Perform misfire diagnostics.
    c. **No.** Repair as needed.

6. EVAP Test

1. Inspect EVAP hose for leak.
2. Is EVAP hose in good condition?
    a. **Yes.** Perform misfire diagnostics.
    b. **No.** Repair as needed.

The TCA contains two potentiometers (designated as TPS1 and TPS2) and an electric DC motor for controlling the actuation of the throttle. TPS1 and TPS2 are mounted in the TCA. They are connected to the keyed shaft for the throttle plate and used to communicate the position of the throttle plate.

Each TPS supplies input to the ECM in response to the positioning of the throttle plate. The ECM activates the motor in the TCA to move the throttle plate, based on signals from the TGS.

See Figure 2. The TCA motor receives input (position data) from the ECM connector [78-3] terminal 8 for electronic throttle control - HI and terminal 9 for electronic throttle control - LOW. The TCA motor drives a series of gears to rotate the position of the throttle plate. Refer to Table 1 for DTCs associated with TCA drive motor.

Table 1. Code Description

DTC	DESCRIPTION
P2100	ETC driver open circuit
P2101	ETC actuation error
P2102	ETC driver shorted low
P2103	ETC driver shorted high

- **P2100 TCA Motor Circuit Open:** Indicates the ECM identified an open load fault for the TCA motor driver.
- **P2101 TCA Motor Circuit Range/Performance:** Indicates the actual position of the throttle plate is out of range from the commanded throttle plate position.
- **P2102 TCA Motor Control Circuit Shorted Low:** Indicates the ECM identified that the drive motor is shorted to ground within the TCA drive motor circuit.
- **P2103 TCA Motor Control Circuit Shorted High:** Indicates the drive motor is shorted high within the TCA drive motor circuit.

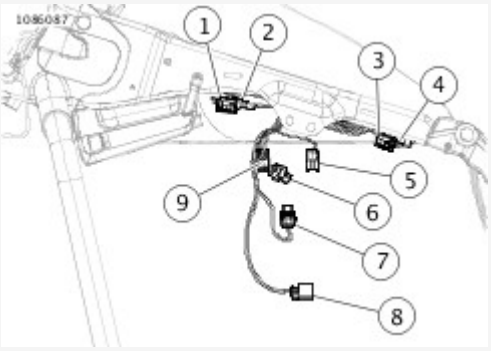

View interactive image

1	Front knock sensor [315]
2	Front ACR [203F]
3	Rear knock sensor [316]
4	Rear ACR [203R]
5	Rear injector [85]
6	TMAP [80]

7	Ignition coil [83]
8	Throttle control [211]
9	Front injector [84]

Figure 1. Engine

Connector Information

For additional information about the connectors in the following diagram(s) and diagnostic procedure(s), see [Wiring → Wire Harness Connectors → General](#).

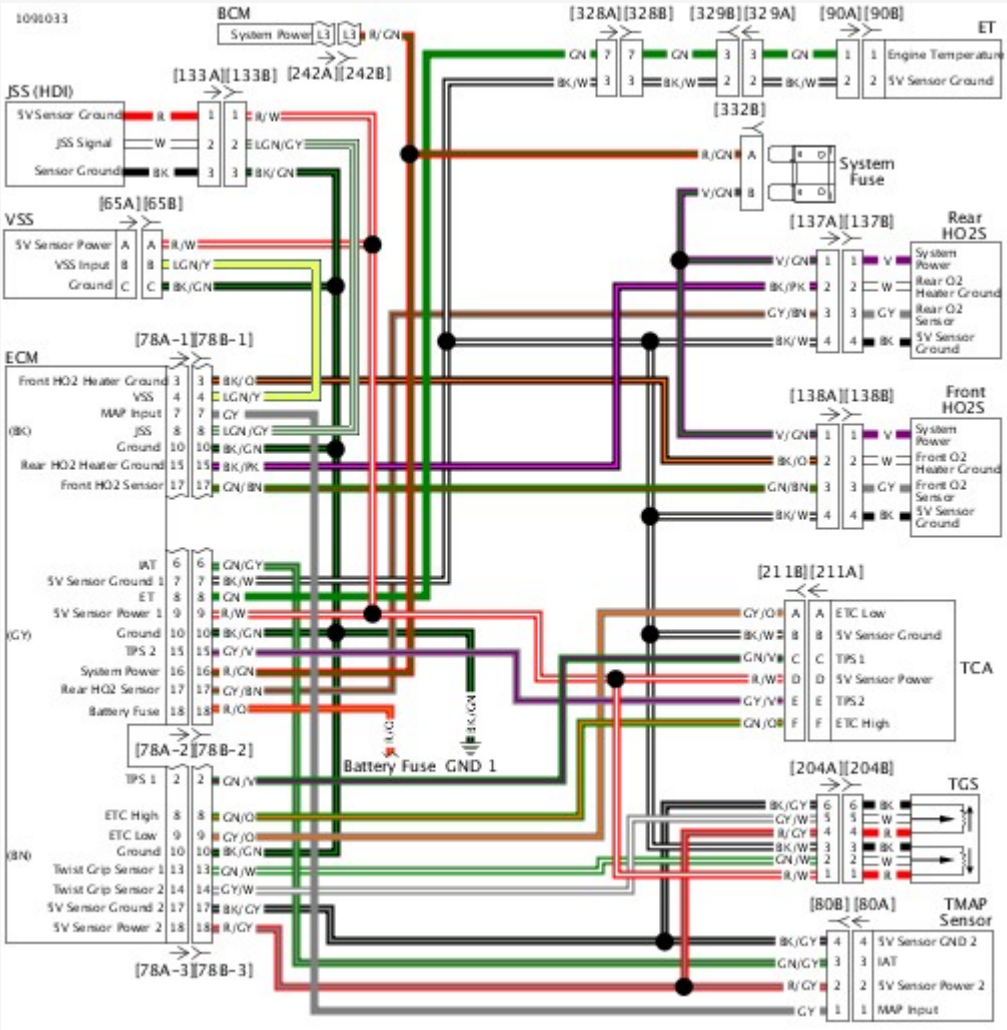

View interactive image

Figure 2. Sensor Circuit

Special Tools

Description	Part Number	Qty.
TEST CONNECTOR KIT	HD-41404	1
BREAKOUT BOX	HD-50390-1	1
ECM CABLE	HD-50390-4	1
ECM OVERLAY	HD-50390-4-P	1

Table 1. DTC P2100 Diagnostic Faults

POSSIBLE CAUSES
Open in throttle actuator control circuit high
Open in throttle actuator control circuit low

1. TCA Test

1. Connect **BREAKOUT BOX (Part Number:HD-50390-1)** and **ECM CABLE (Part Number:HD-50390-4)** to wiring harness [78B-1], [78B-2] and [78B-3], leaving ECM [78A-1], [78A-2] and [78A-3] disconnected. See **Initial Diagnostics → DIAGNOSTIC TOOLS**.
2. Verify **ECM OVERLAY (Part Number:HD-50390-4-P)** is in position on BOB.
3. Using **TEST CONNECTOR KIT (Part Number:HD-41404)**, test resistance between BOB [78-3] terminals 8 and 9.
4. Is resistance greater than 10 ohms?

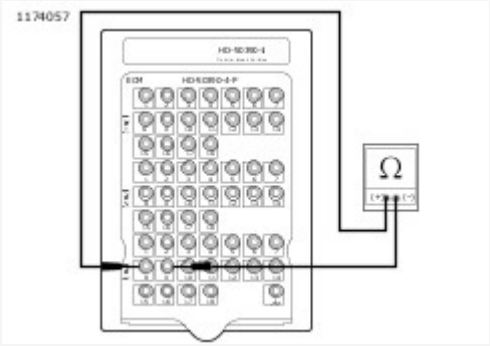

View interactive image

Figure 1.

a. **Yes.** **Go to Test 2.**
b. **No.** Perform wiggle test. See **Initial Diagnostics → DIAGNOSTICS AND TROUBLESHOOTING → Wiggle Test**. If resistance is below 10 ohms, replace ECM.

2. TCA High Circuit Test

1. Disconnect TCA [211].

2. Using **TEST CONNECTOR KIT (Part Number:HD-41404)**, test resistance between BOB [78-3] terminal 8 and TCA [211B] terminal F.
3. Is resistance less than 0.5 ohm?

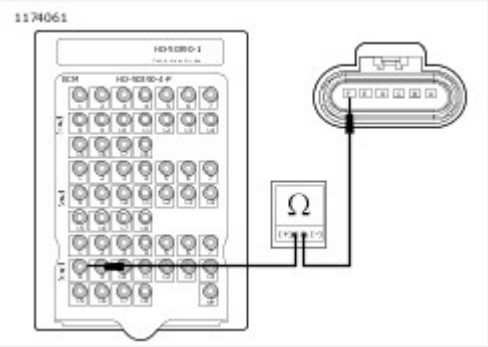

View interactive image

Figure 2.

a. **Yes.** **Go to Test 3.**
b. **No.** Repair open in (GN/O) wire.

3. TCA Low Circuit Test

1. Test resistance between BOB [78-3] terminal 9 and TCA [211B] terminal A.
2. Is resistance less than 0.5 ohm?

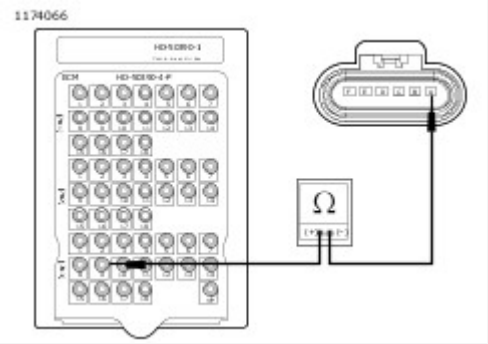

View interactive image

Figure 3.

a. **Yes.** Replace TCA.
b. **No.** Repair open in (GY/O) wire.

Special Tools

Description	Part Number	Qty.
TEST CONNECTOR KIT	HD-41404	1
BREAKOUT BOX	HD-50390-1	1
ECM CABLE	HD-50390-4	1
ECM OVERLAY	HD-50390-4-P	1

Table 1. DTC P2101 Diagnostic Faults

POSSIBLE CAUSES
Short between throttle actuator control circuits
Open in throttle actuator control circuit high
Open in throttle actuator control circuit low

1. TCA Circuit Resistance Test

1. Turn IGN OFF.
2. Connect **BREAKOUT BOX (Part Number:HD-50390-1)** and **ECM CABLE (Part Number:HD-50390-4)** to wiring harness [78B-1], [78B-2] and [78B-3], leaving ECM [78A-1], [78A-2] and [78A-3] disconnected. See **Initial Diagnostics → DIAGNOSTIC TOOLS**.
3. Verify **ECM OVERLAY (Part Number:HD-50390-4-P)** is in position on BOB.
4. Using **TEST CONNECTOR KIT (Part Number:HD-41404)**, test resistance between BOB [78-3] terminals 8 and 9.
5. Is resistance less than 2 ohms?

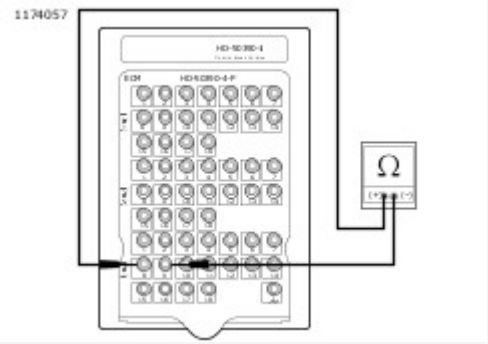

View interactive image

Figure 1.

a. **Yes.** **Go to Test 2.**
b. **No.** **Go to Test 3.**

2. TCA Test

1. Disconnect TCA [211].
2. Test resistance between BOB [78-3] terminal 8 and terminal 9.
3. See Figure 1. Is resistance less than 2 ohms?
    a. **Yes.** Repair short between the (GN/O) and (GY/O) wires.
    b. **No.** Replace TCA.

3. TCA High Circuit Test

1. Test resistance between BOB [78-3] terminal 8 and [211B] terminal F.
2. Is resistance less than 0.5 ohm?

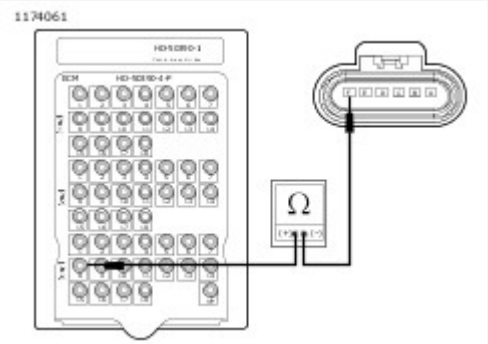

View interactive image

Figure 2.

a. **Yes.** Go to Test 4.
b. **No.** Repair open in (GN/O) wire.

4. TCA Low Circuit Test

1. Test resistance between BOB [78-3] terminal 9 and [211B] terminal A.
2. Is resistance less than 0.5 ohm?

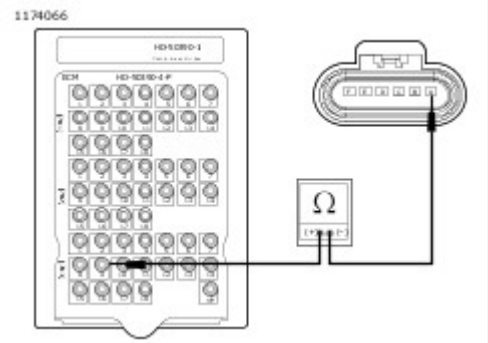

View interactive image

Figure 3.

a. **Yes.** Replace ECM.
b. **No.** Repair open in (GY/O) wire.

Special Tools

Description	Part Number	Qty.
TEST CONNECTOR KIT	HD-41404	1

Table 1. DTC P2102 Diagnostic Faults

POSSIBLE CAUSES
Short to ground in throttle actuator control circuit low
Short to ground in throttle actuator control circuit high

1. TCA High Circuit Test

1. Turn IGN OFF.
2. Disconnect TCA [211].
3. Using **TEST CONNECTOR KIT (Part Number:HD-41404)**, test resistance between [211B] terminal F and ground.
4. Is resistance greater than 1000 ohms?

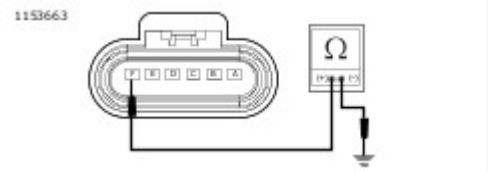

View interactive image

Figure 1.

a. **Yes.** **Go to Test 2.**
b. **No.** Repair short to ground in (GN/O) wire.

2. TCA Test

1. Test resistance between [211B] terminal A and ground.
2. Is resistance less than 2 ohms?

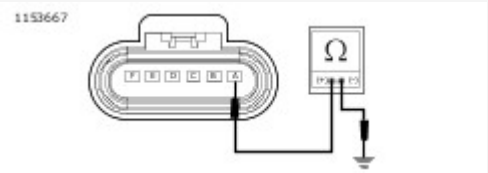

View interactive image

Figure 2.

a. **Yes.** Repair short to ground in (GY/O) wire.

b. **No.** Replace TCA.

Special Tools

Description	Part Number	Qty.
TEST CONNECTOR KIT	HD-41404	1
BREAKOUT BOX	HD-50390-1	1
ECM CABLE	HD-50390-4	1
ECM OVERLAY	HD-50390-4-P	1

Table 1. DTC P2103 Diagnostic Faults

POSSIBLE CAUSES
Short to ground in throttle actuator control circuit low
Short to ground in throttle actuator control circuit high

1. TCA High Circuit Test

1. Turn IGN OFF.
2. Connect **BREAKOUT BOX (Part Number:HD-50390-1)** and **ECM CABLE (Part Number:HD-50390-4)** to wiring harness [78B-1], [78B-2] and [78B-3], leaving ECM [78A-1], [78A-2] and [78A-3] disconnected. See **Initial Diagnostics → DIAGNOSTIC TOOLS**.
3. Verify **ECM OVERLAY (Part Number:HD-50390-4-P)** is in position on BOB.
4. Disconnect TCA [211].
5. Using **TEST CONNECTOR KIT (Part Number:HD-41404)**, test continuity between BOB [78-2] terminal 16 and [78-3] terminal 8.
6. Is continuity present?

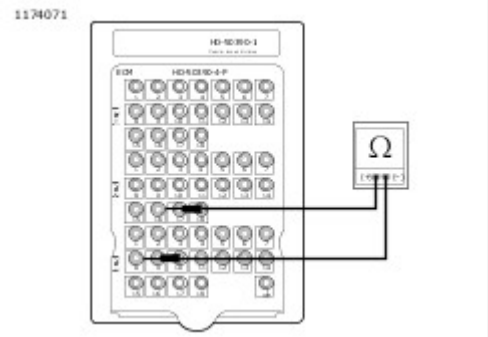

View interactive image

Figure 1.

a. **Yes.** Repair short between (GN/O) and (R/GN) wires.
b. **No.** **Go to Test 2.**

2. TCA Low Circuit Test

1. Test continuity between BOB [78-2] terminal 16 and [78-3] terminal 9.
2. Is continuity present?

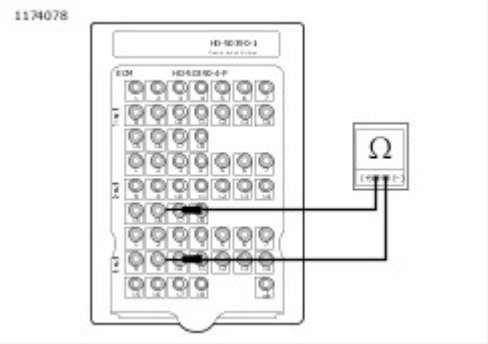

View interactive image

Figure 2.

a. **Yes.** Repair short between (GY/O) and (R/GN) wires.
b. **No.** Replace ECM.

The ECM sets DTC P2105 and provides a forced shut down of the engine when the performance of the TCA cannot be verified.

Initially, the ECM commands the fuel pump and fuel injectors to be disabled until the actual fault is cleared.

The ECM sets DTC P2107 to identify an internal over-temperature shutdown or a power supply failure. Refer to **Table 1**.

Table 1. Code Description

DTC	DESCRIPTION
P2105	ETC forced shutdown mode
P2107	ETC driver internal error

Table 1. DTC P2105, P2107 Diagnostic Faults

POSSIBLE CAUSES
Internal ECM fault

1. DTC Verification Test

1. Clear DTCs.
2. Start and run the engine for 30 seconds.
3. Check DTCs.
4. Did DTC P2105 set with no other DTCs?
    a. **Yes.** Replace ECM.
    b. **No, other DTCs set.** Refer to Initial Diagnostics → Initial Diagnostics → Diagnostics.
    c. **No, no DTCs set.** DTC was properly cleared.

The starts, then stalls condition may be created by the fuel system, the idle air control system or an ECM failure.

There may be DTCs set causing this condition. Solve the problems with the DTCs before performing the tests in this section. The DTCs that may be involved with starts, then stalls are:

- **Fuel injectors:** DTCs P0261, P0262 and P0264
- **Password problem:** DTC P1009
- **TPS1:** DTCs P0122 and P0123
- **ECM errors:** DTCs P0603 and P0605

Diagnostic Tips

- The vehicle will stall if the jiffy stand is extended when the transmission is in gear.
- If this condition is fuel related, perform fuel pressure test.

Connector Information

For additional information about the connectors in the following diagram(s) and diagnostic procedure(s), see [Wiring → Wire Harness Connectors → General].

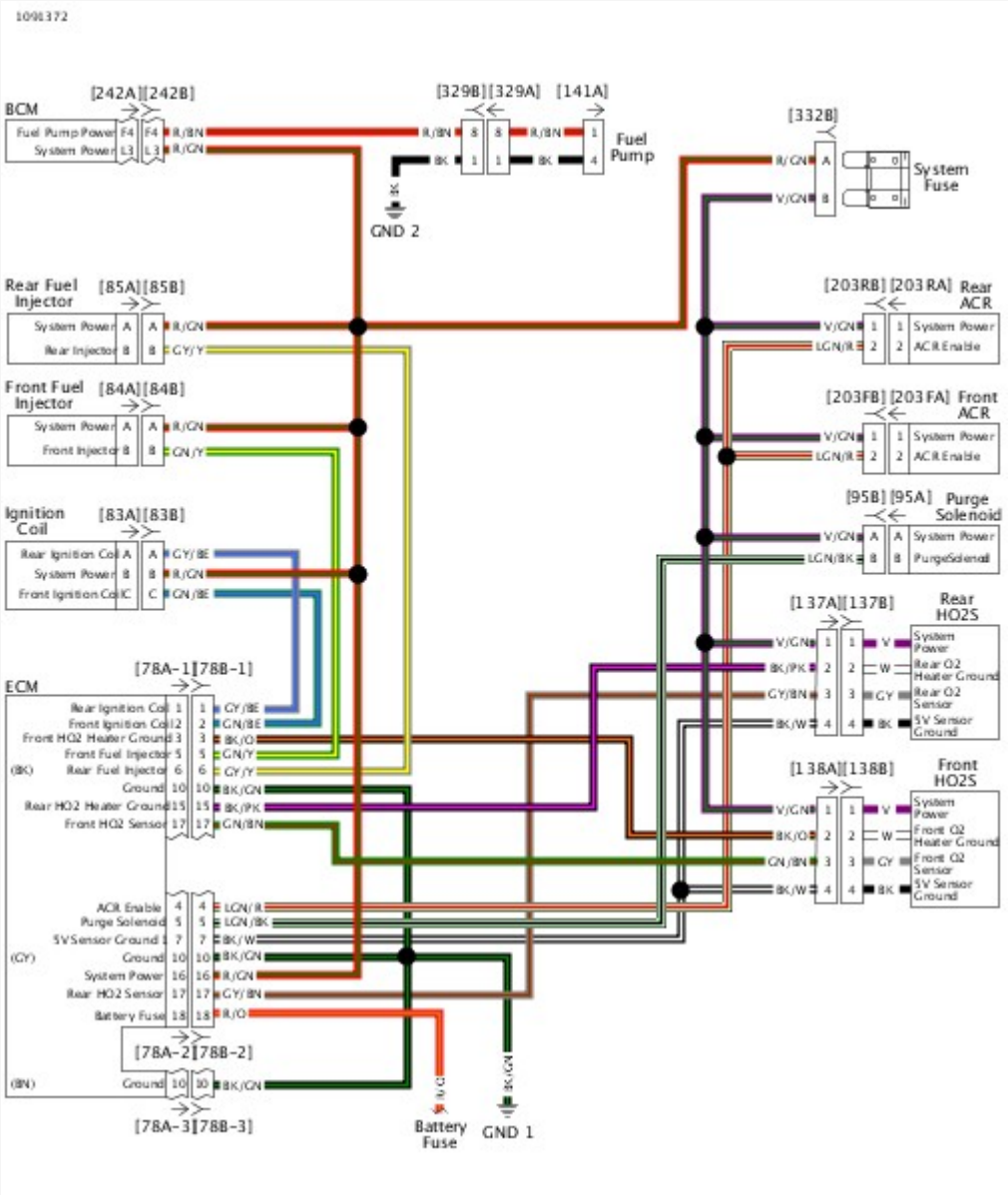

View interactive image

Figure 1. System Power Circuit

Special Tools

Description	Part Number	Qty.
TEST CONNECTOR KIT	HD-41404	1
BREAKOUT BOX	HD-50390-1	1
ECM CABLE	HD-50390-4	1
ECM OVERLAY	HD-50390-4-P	1

Table 1. Starts, Then Stalls Diagnostic Faults

POSSIBLE CAUSES
Fuel system malfunction
Idle air control system malfunction

1. Throttle Test

1. Will engine start with throttle partially opened and then stall when closed?
    a. **Yes.** See Engine Management → IDLE SPEED CONTROL DIAGNOSTICS.
    b. **No.** Go to Test 2.

2. Fuel System Test

1. Perform fuel pressure test.
2. Is fuel pressure normal?
    a. **Yes.** If fuel injectors are okay, then continue with tests. Go to Test 3.
    b. **No.** Repair fuel pressure problem.

3. System Power Test

1. Turn IGN OFF.
2. Connect BREAKOUT BOX (Part Number:HD-50390-1) and ECM CABLE (Part Number:HD-50390-4) to wiring harness [78B-1], [78B-2] and [78B-3], leaving ECM [78A-1], [78A-2] and [78A-3] disconnected. See Initial Diagnostics → DIAGNOSTIC TOOLS.
3. Verify ECM OVERLAY (Part Number:HD-50390-4-P) is in position on BOB.
4. Turn IGN ON.
5. Using TEST CONNECTOR KIT (Part Number:HD-41404), test voltage between BOB [78-2] terminal 16 and ground.
6. Is voltage present?

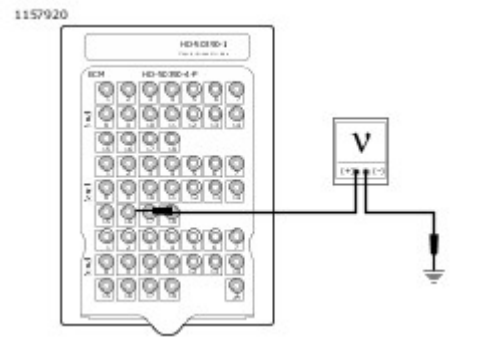

View interactive image

Figure 1.

a. **Yes.** Inspect connections at ECM. See [Initial Diagnostics → DIAGNOSTICS AND TROUBLESHOOTING → Wiggle Test]. If connections are good and wiggle test does not find intermittent, replace ECM.
b. **No.** Repair open in (R/GN) wire.

See Figure 1. Ignition coil DTCs sets if the ignition coil primary voltage is out of range. This could occur if there is an open coil or loss of power to the coil. If front and rear DTCs are set simultaneously, it is likely a coil power failure or a coil failure. The coil receives power from the BCM at the same time the purge solenoid, active exhaust actuator, active intake solenoid, ECM and injectors are activated.

Table 1. Code Description

DTC	DESCRIPTION
P2300	Ignition coil driver low/open (front)
P2301	Ignition coil driver shorted high (front)
P2303	Ignition coil driver low/open (rear)
P2304	Ignition coil driver shorted high (rear)

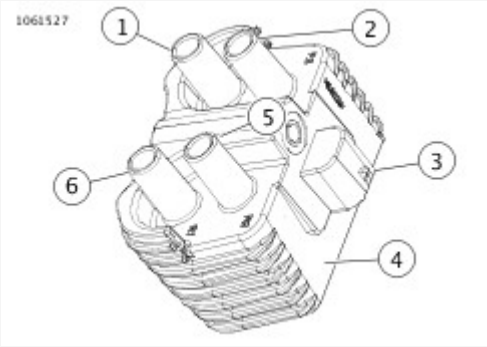

View interactive image

1	Front left
2	Front right
3	Ignition coil connector
4	Ignition coil back
5	Rear right
6	Rear left

Figure 1. Ignition Coil Connector

Diagnostic Tips

When disconnecting any connectors always inspect connector for corrosion or backed out terminals and repair as required.

Connector Information

For additional information about the connectors in the following diagram(s) and diagnostic procedure(s), see Wiring → Wire Harness Connectors → General.

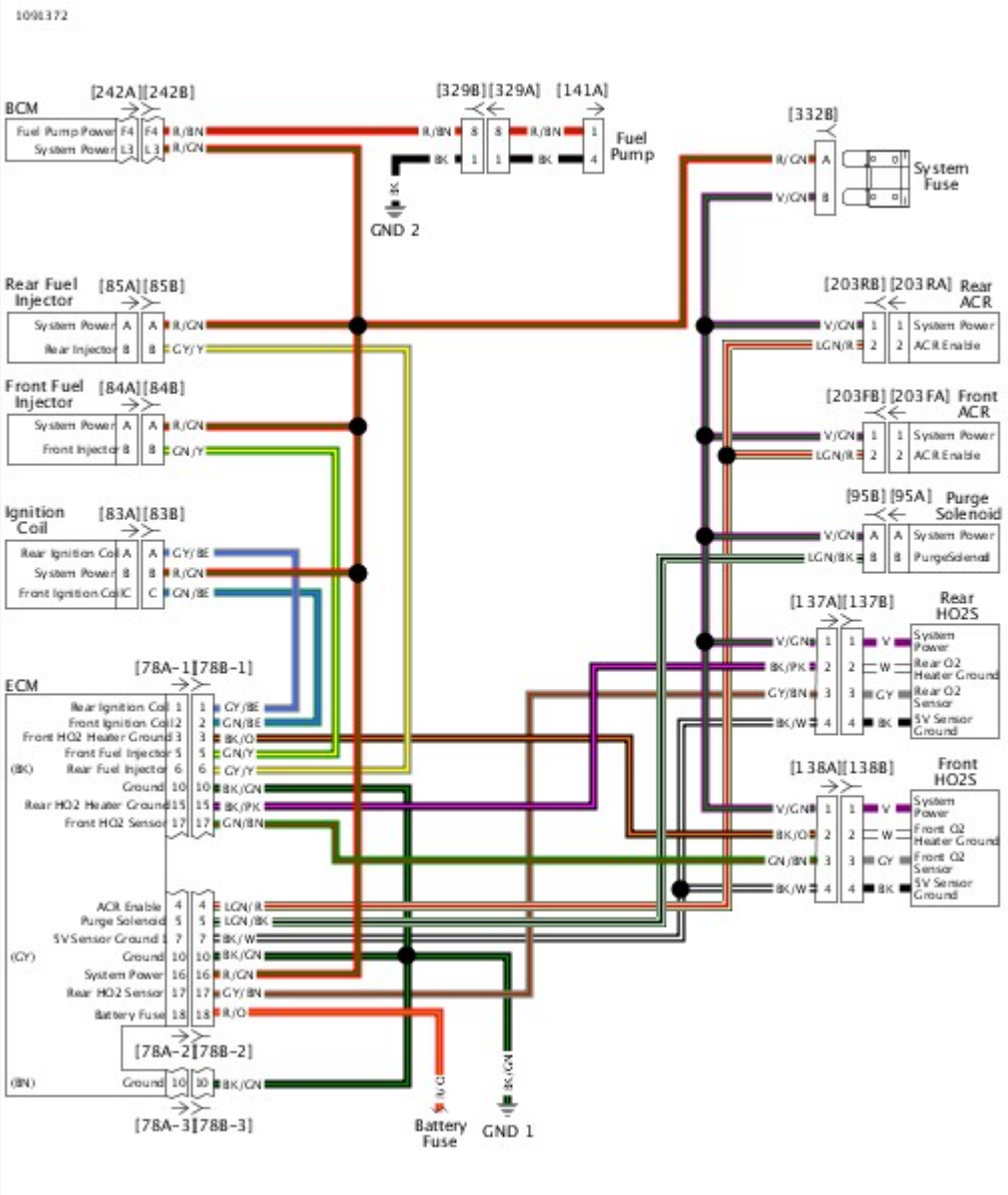

View interactive image

Figure 2. System Power Circuit

Special Tools

Description	Part Number	Qty.
TEST CONNECTOR KIT	HD-41404	1
BREAKOUT BOX	HD-50390-1	1
ECM CABLE	HD-50390-4	1
ECM OVERLAY	HD-50390-4-P	1

Table 1. DTC P2300 Diagnostic Faults

POSSIBLE CAUSES
Ignition coil malfunction
Open or short to ground in signal circuit
Open power circuit

1. Ignition Coil Test

1. Turn IGN OFF.
2. Disconnect ignition coil [83].
3. Using **TEST CONNECTOR KIT (Part Number:HD-41404)**, test resistance between [83A] terminals B and C.
4. Is resistance greater than 2 ohms?

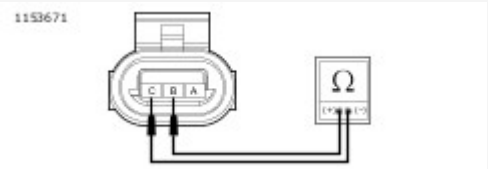

View interactive image

Figure 1.

a. **Yes.** Replace ignition coil.
b. **No.** Go to Test 2.

2. Input Voltage Test

1. Turn IGN ON.
2. Test voltage between [83B] terminal B (R/GN) wire and ground.
3. Is battery voltage present?

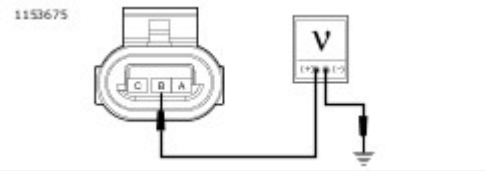

View interactive image

Figure 2.

a. **Yes.** Go to Test 3.
b. **No.** Repair open on (R/GN) wire.

3. Control Wire Continuity Test

1. Turn IGN OFF.
2. Connect BREAKOUT BOX (Part Number:HD-50390-1) and ECM CABLE (Part Number:HD-50390-4) between wiring harness [78B-1], [78B-2] and [78B-3], and ECM [78A-1], [78A-2] and [78A-3]. See Initial Diagnostics → DIAGNOSTIC TOOLS.
3. Verify ECM OVERLAY (Part Number:HD-50390-4-P) is in position on BOB.
4. Test resistance between BOB [78-1] terminal 2 and [83B] terminal C (GN/BE) wire.
5. Is resistance less than 0.5 ohm?

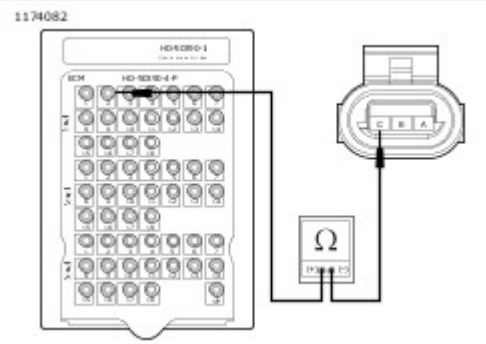

View interactive image

Figure 3.

a. **Yes.** Go to Test 4.
b. **No.** Repair open in (GN/BE) wire.

4. Control Wire Shorted to Ground Test

1. Disconnect [78-1], [78-2] and [78-3].
2. Test continuity between BOB [78-1] terminal 2 and ground.
3. Is continuity present?

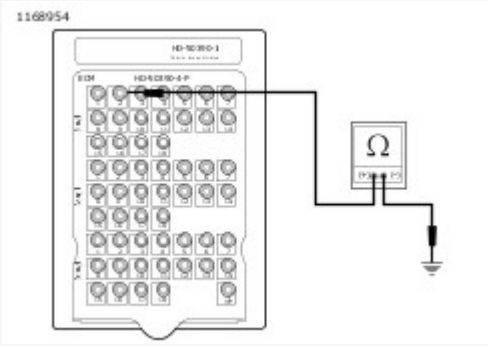

View interactive image

Figure 4.

a. **Yes.** Repair short to ground in (GN/BE) wire.
b. **No.** Replace ECM.

Special Tools

Description	Part Number	Qty.
TEST CONNECTOR KIT	HD-41404	1

Table 1. DTC P2301 Diagnostic Faults

POSSIBLE CAUSES
Short to voltage in signal circuit

1. Ignition Coil Shorted to Voltage Test

1. Turn IGN OFF.
2. Disconnect ignition coil [83].
3. Turn IGN ON.
4. Using **TEST CONNECTOR KIT (Part Number:HD-41404)**, test voltage between [83B] terminal C (GN/BE) wire and ground.
5. Is voltage greater than 5.0V?

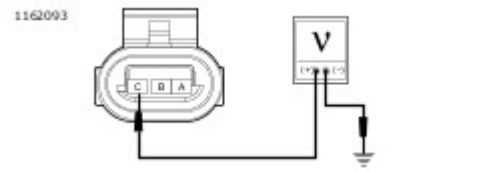

View interactive image

Figure 1.

a. **Yes.** Repair short to voltage in (GN/BE) wire.
b. **No.** **Go to Test 2.**

2. Open Test

1. Test resistance between [83A] terminals B and C.
2. Is resistance greater than 0.4 ohms?

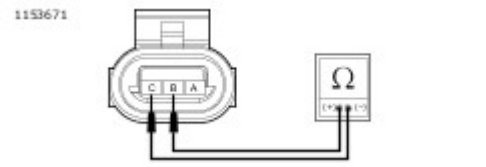

View interactive image

Figure 2.

a. **Yes.** Replace ECM.
b. **No.** Replace ignition coil.

Special Tools

Description	Part Number	Qty.
TEST CONNECTOR KIT	HD-41404	1
BREAKOUT BOX	HD-50390-1	1
ECM CABLE	HD-50390-4	1
ECM OVERLAY	HD-50390-4-P	1

Table 1. DTC P2303 Diagnostic Faults

POSSIBLE CAUSES
Open or short to ground in signal circuit
Open power circuit

1. Ignition Coil Test

1. Turn IGN OFF.
2. Disconnect ignition coil [83].
3. Using [TEST CONNECTOR KIT (Part Number:HD-41404)](), test resistance between [83A] terminals B and A.
4. Is resistance greater than 2 ohms?

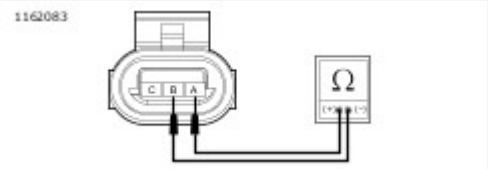

View interactive image

Figure 1.

a. **Yes.** Replace ignition coil.
b. **No.** [Go to Test 2.]()

2. Input Voltage Test

1. Turn IGN ON.
2. Test voltage between [83B] terminal B (R/GN) wire and ground.
3. Is battery voltage present?

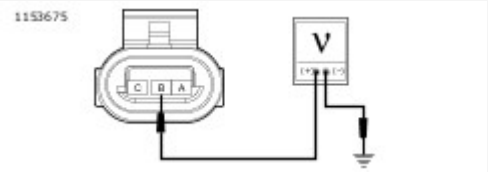

View interactive image

Figure 2.

a. **Yes.** Go to Test 3.
b. **No.** Repair open in (R/GN) wire.

3. Control Wire Resistance Test

1. Turn IGN OFF.
2. Connect BREAKOUT BOX (Part Number:HD-50390-1) and ECM CABLE (Part Number:HD-50390-4) between wiring harness [78B-1], [78B-2] and [78B-3], and ECM [78A-1], [78A-2] and [78A-3]. See Initial Diagnostics → DIAGNOSTIC TOOLS.
3. Verify ECM OVERLAY (Part Number:HD-50390-4-P) is in position on BOB.
4. Test resistance between BOB [78-1] terminal 1 and [83B] terminal A (GY/BE) wire.
5. Is resistance less than 0.5 ohm?

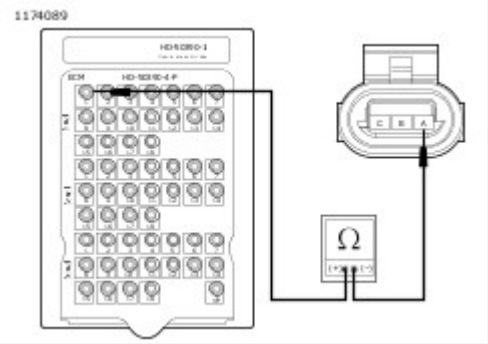

View interactive image

Figure 3.

a. **Yes.** Go to Test 4.
b. **No.** Repair open in (GY/BE) wire.

4. Control Wire Shorted to Ground Test

1. Disconnect [78-1], [78-2] and [78-3].
2. Test continuity between BOB [78-1] terminal 1 and ground.
3. Is continuity present?

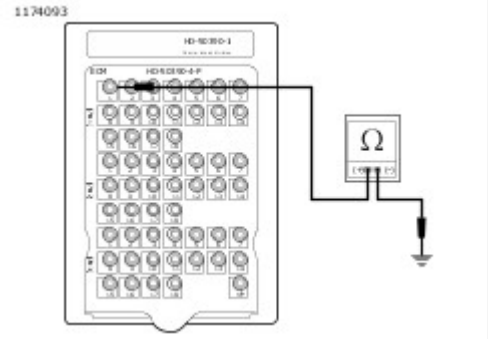

View interactive image

Figure 4.

a. **Yes.** Repair short to ground in (GY/BE) wire.
b. **No.** Replace ECM.

Special Tools

Description	Part Number	Qty.
TEST CONNECTOR KIT	HD-41404	1

Table 1. DTC P2304 Diagnostic Faults

POSSIBLE CAUSES
Short to voltage in signal circuit

1. Ignition Coil Shorted to Voltage Test

1. Turn IGN OFF.
2. Disconnect ignition coil [83].
3. Turn IGN ON.
4. Using **TEST CONNECTOR KIT (Part Number:HD-41404)**, test voltage between [83B] terminal A (GY/BE) wire and ground.
5. Is voltage more than 5.0V?

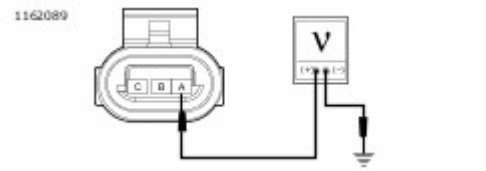

View interactive image

Figure 1.

a. **Yes.** Repair short to voltage in (GY/BE) wire.
b. **No.** **Go to Test 2.**

2. Open Test

1. Test resistance between [83A] terminals B and A.
2. Is resistance greater than 2 ohms?

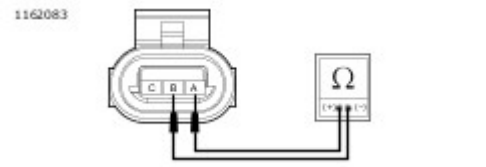

View interactive image

Figure 2.

a. **Yes.** Replace ECM.
b. **No.** Replace ignition coil.

The ECM sets DTC P2119 when it determines the throttle plate does not return to the correct de-energized position. This error primarily indicates there may be non-electrical conditions which affect the throttle body range/performance. Refer to **Table 1**.

Table 1. Code Description

DTC	DESCRIPTION
P2119	ETC actuator return error

This DTC may have the following conditions:

- Something may be physically interfering with the throttle plate operation such as foreign material, debris, physical obstruction or loosely/improperly mounted throttle plate.
- Damaged or inoperative throttle plate return spring.
- Defective mechanical component(s) internal to the TCA.

Table 1. DTC P2119 Diagnostic Faults

POSSIBLE CAUSES
Mechanical interference

1. Air Inlet Interference Test

1. Inspect air inlet. Check for foreign debris and/or mechanical interference to the throttle plate.
2. Were any issues found?
    a. **Yes.** Go to Test 2.
    b. **No.** Replace induction module.

2. Validation Test

1. Clear inlet. Check throttle plate movement.
2. Clear DTCs.
3. Start the engine and operate the throttle.
4. Check DTCs.
5. Did DTC P2119 set?
    a. **Yes.** Replace induction module.
    b. **No.** Repair complete.

If the starter will not crank the engine, the problem is not EFI related. See Starting and Charging → STARTING SYSTEM or Accessories, Horn, Lighting and Security → SECURITY SYSTEM.

There may be DTCs associated with this problem. Check for DTCs and clear them before proceeding with this test.

NOTE

To set a CKP DTC, a start attempt must last at least five seconds.

View interactive image

Figure 1. Spark Tester

Connector Information

For additional information about the connectors in the following diagram(s) and diagnostic procedure(s), see Wiring → Wire Harness Connectors → General.

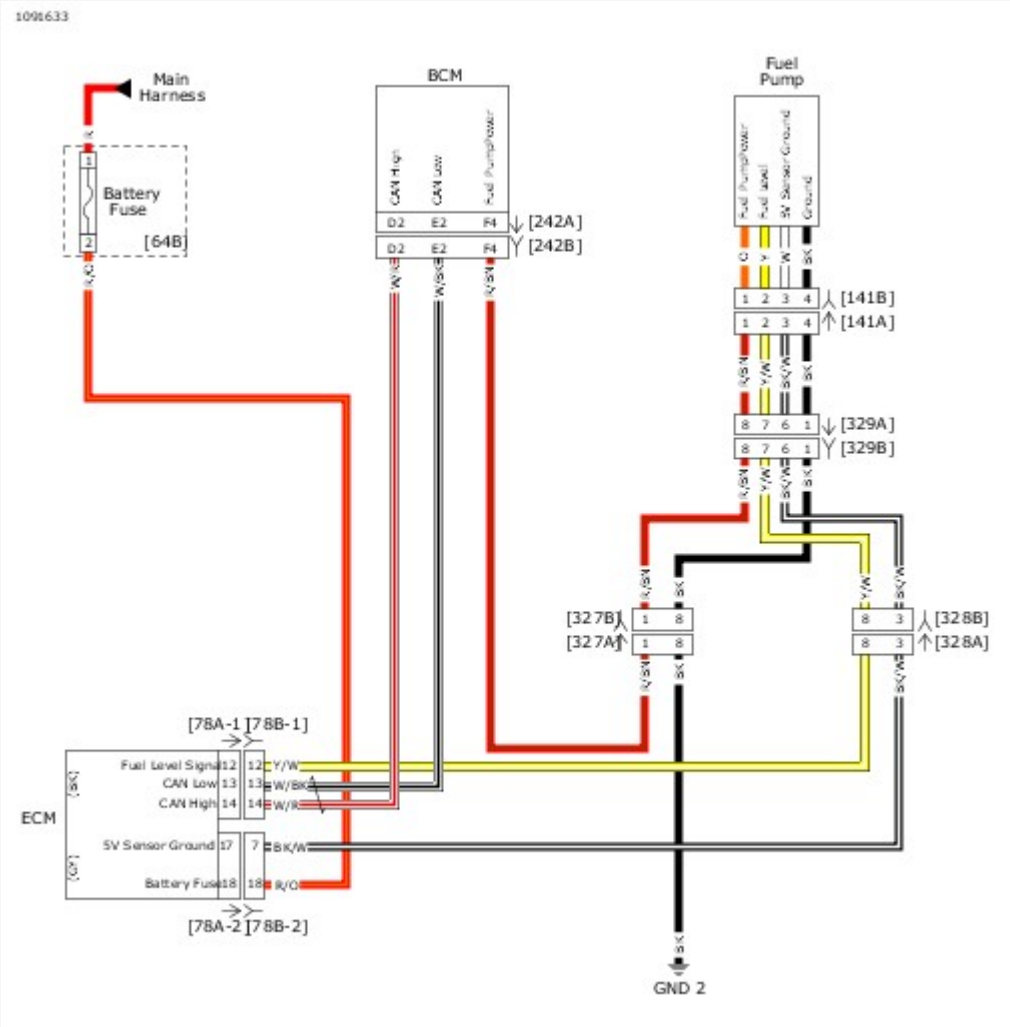

View interactive image

Figure 2. Fuel Sensor Circuit

Special Tools

Description	Part Number	Qty.
TEST CONNECTOR KIT	HD-41404	1
BREAKOUT BOX	HD-50390-1	1
BCM CABLE	HD-50390-2	1
BCM OVERLAY	HD-50390-2-P	1
INLINE SPARK TESTER KIT	HD-51724	1

Table 1. Engine Cranks but Will Not Start Diagnostic Faults

POSSIBLE CAUSES
Battery voltage too low
Ignition system issues
Fuel system issues
Electrical system issues
No or low compression
Open ground circuit

1. Preliminary Engine Tests

1. Verify battery connections are in good condition.
2. Verify fuel in the tank is fresh and not contaminated.
3. Verify spark plug wires are firmly connected to the coil and plugs.
4. Verify fuel injectors are not clogged.
5. Verify battery condition. See Starting and Charging → BATTERY TESTING.
6. Does battery pass tests?
    a. **Yes.** Go to Test 2.
    b. **No.** Charge or replace battery.

2. Check Engine Lamp Test

1. Turn IGN OFF.
2. Wait 30 seconds, then turn IGN ON.
3. Does check engine lamp illuminate for 4 seconds immediately after IGN ON?
    a. **Yes.** Go to Test 3.
    b. **No.** Verify all fuses are good. See Initial Diagnostics → Initial Diagnostics → Initial Diagnostics.

3. Spark Present Test

1. Check spark plug condition. Replace if fouled.
2. Using INLINE SPARK TESTER KIT (Part Number:HD-51724), check spark at both plugs while cranking engine.
3. Is spark present?
    a. **Yes.** Go to Test 4.
    b. **No.** The spark plugs will not spark if there is low or no compression. If spark is not present, test compression before troubleshooting ignition circuit. Once good compression is confirmed, check condition of ignition coils, coil primary wiring and spark plug boots. See Engine Management → CKP SENSOR DIAGNOSTICS.

4. Compression Test

1. Perform compression test.
2. Does engine pass compression test?
    a. **Yes.** Go to Test 5.
    b. **No.** Repair engine loss of compression.

5. Fuel Pump Voltage Test

1. Turn IGN OFF.
2. Disconnect fuel pump [141].
3. Turn IGN ON.
4. Using TEST CONNECTOR KIT (Part Number:HD-41404), test voltage between [141B] terminals 1 and 4 during the first 2-3 seconds after IGN ON.
5. Is battery voltage present?

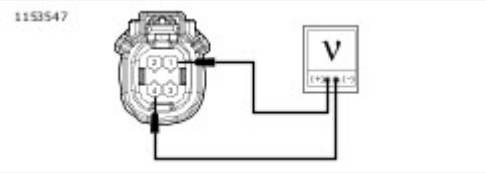

View interactive image

Figure 1.

    a. **Yes.** Go to Test 6.
    b. **No.** Go to Test 7.

6. Fuel System Test

1. Check fuel system and perform fuel pressure test.
2. Does fuel pressure meet specification?
    a. **Yes.** Inspect and clean throttle body and repair as needed.
    b. **No.** Inspect fuel inlet sock and fuel filter for obstruction. Inspect internal fuel hose for leaks. If no issues are found, replace fuel pump assembly.

7. Fuel Pump Open Circuit Test

1. Turn IGN OFF.
2. Connect BREAKOUT BOX (Part Number:HD-50390-1) and BCM CABLE (Part Number:HD-50390-2) between wire

harness [242B], leaving [242A] disconnected. See **Initial Diagnostics → DIAGNOSTIC TOOLS**.

3. Verify **BCM OVERLAY (Part Number:HD-50390-2-P)** is in position on BOB.
4. Test resistance between [141B] terminal 1 and BOB terminal F4.
5. Is resistance less than 0.5 ohms?

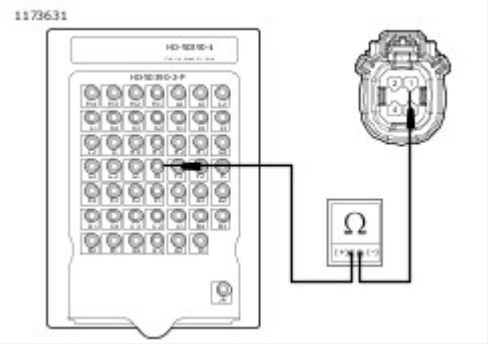

View interactive image

Figure 2.

a. **Yes.** Repair open on (BK) wire to ground.
b. **No.** Repair open (R/BN) wire.

Misfire conditions may be caused by:

- Battery condition and connections.
- Fuel system problems. See **Engine Management → ENGINE PERFORMANCE DIAGNOSTICS**.
- Ignition system faults.

Diagnostic Tips

WARNING

Wipe up spilled fuel and dispose of rags in a suitable manner. An open spark around gasoline could cause a fire or explosion, resulting in death or serious injury. (00518b)

- When performing the steps in the diagnostic tests, use a known good part to verify whether a suspected part is faulty.
- The ignition coil does not require full installation to be functional.
- Verify faulty ignition coil by performing resistance test.

Special Tools

Description	Part Number	Qty.
INLINE SPARK TESTER KIT	HD-51724	1

See Figure 1. Using a INLINE SPARK TESTER KIT (Part Number:HD-51724) can help determine whether a problem exists in the ignition or fuel systems.

- If the test light flashes without interruption on both cylinders during the misfire event, verify spark plug condition and gap and inspect the fuel system for proper operation.
- If the test light does not flash or the flash is interrupted during the misfire event, the problem is ignition related.

1. Turn IGN OFF.
2. Remove front spark plug wire.
3. Install inline spark tester between spark plug wire and spark plug.
4. Start engine and inspect tester light. The light will flash on each spark event if power is transmitted to the plug.
5. Install and repeat procedure on rear cylinder.

NOTE

Use an inline spark tester and a load applying dynamometer to diagnose misfire under load.

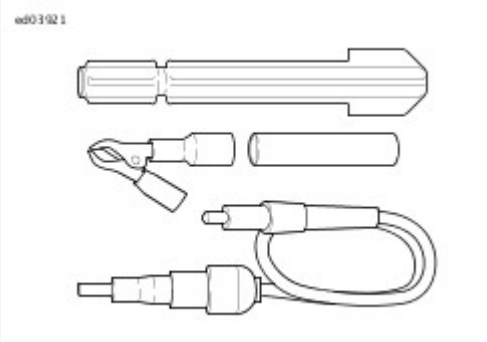

View interactive image

Figure 1. Inline Spark Tester Kit

Connector Information

For additional information about the connectors in the following diagram(s) and diagnostic procedure(s), see Wiring → Wire Harness Connectors → General.

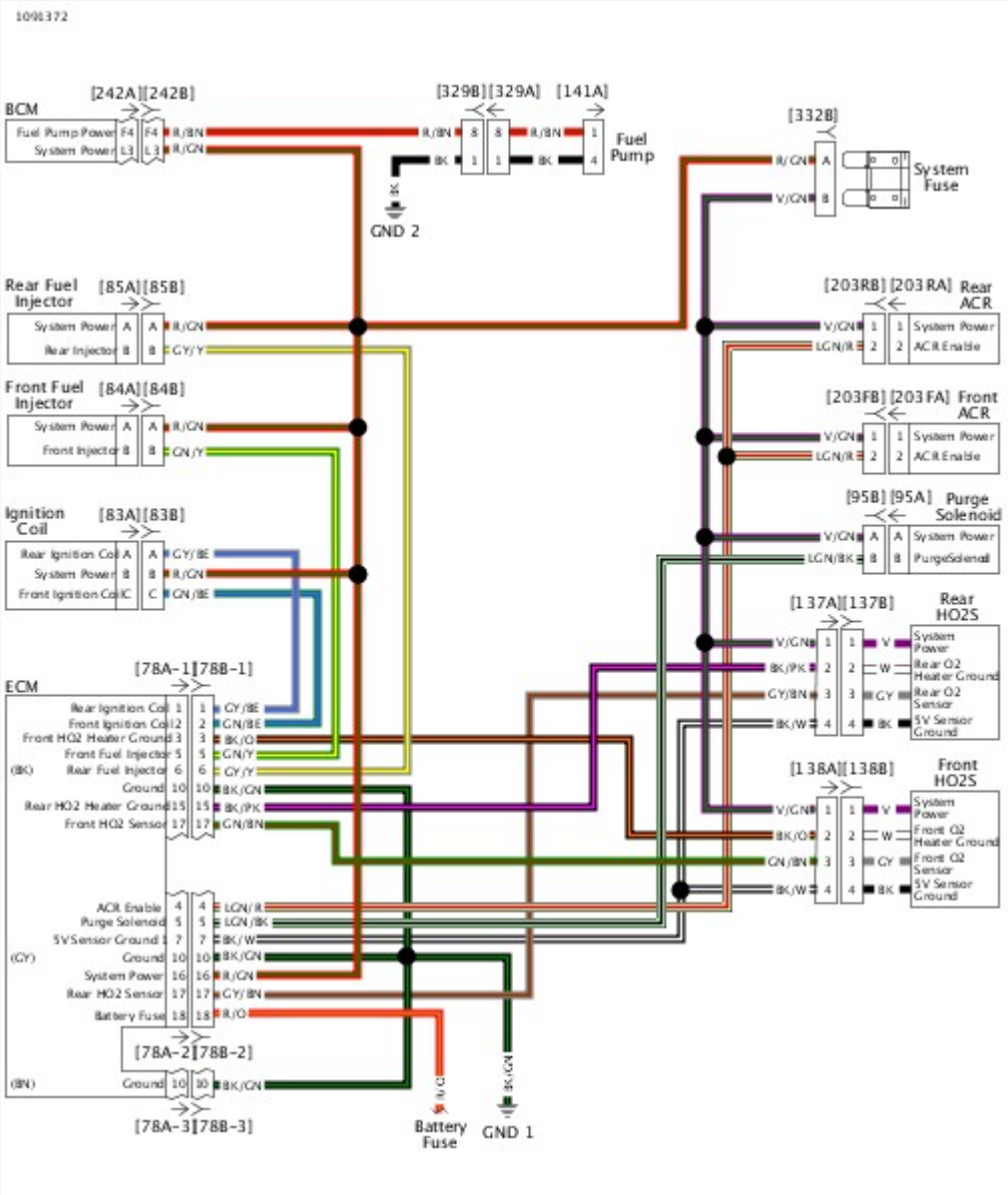

View interactive image

Figure 2. System Power Circuit

Special Tools

Description	Part Number	Qty.
TEST CONNECTOR KIT	HD-41404	1
BREAKOUT BOX	HD-50390-1	1
BCM CABLE	HD-50390-2	1
BCM OVERLAY	HD-50390-2-P	1
ECM CABLE	HD-50390-4	1
ECM OVERLAY	HD-50390-4-P	1
INLINE SPARK TESTER KIT	HD-51724	1

Table 1. Misfire At Idle or Under Load Diagnostic Faults

POSSIBLE CAUSES
Ignition system malfunction
Fuel system malfunction
Electrical system malfunction

1. Power Ground Resistance Test

1. Turn IGN OFF.
2. Connect **BREAKOUT BOX (Part Number:HD-50390-1)** and **ECM CABLE (Part Number:HD-50390-4)** between wiring harness [78B-1], [78B-2] and [78B-3], and ECM [78A-1], [78A-2] and [78A-3]. See **Initial Diagnostics → DIAGNOSTIC TOOLS**.
3. Verify **ECM OVERLAY (Part Number:HD-50390-4-P)** is in position on BOB.
4. Using **TEST CONNECTOR KIT (Part Number:HD-41404)**, test resistance between BOB [78-1] terminal 10, [78-2] terminal 10 and then [78-3] terminal 10 to ground.
5. Is resistance less than 0.5 ohm?

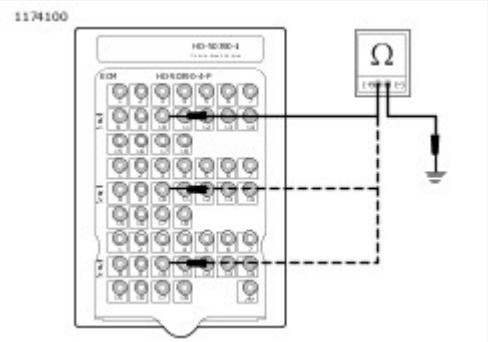

View interactive image

Figure 1.

a. **Yes.** Go to Test 2.
b. **No.** Repair open on (BK/GN) wire.

2. Spark Test

1. Connect INLINE SPARK TESTER KIT (Part Number:HD-51724) between front spark plug cable and ground. See Initial Diagnostics → DIAGNOSTIC TOOLS.
2. Crank engine for a few seconds.
3. Remove tester from front spark plug cable. Connect rear spark plug cable and ground.
4. Crank engine for a few seconds.
5. Did spark jump gap on both cables?
   a. **Yes.** Check for faulty, worn or cracked spark plugs, plug fouling due to mechanical problems or faulty connection at plug or coils. Repair as required.
   b. **No.** Go to Test 3.

3. Spark Plug Wire Test

1. Turn IGN OFF.
2. Disconnect spark plug cables.
3. Test resistance of both spark plug cables.
4. Is resistance within specifications? Refer to Initial Diagnostics → Specifications → Specifications → Spark Plug Cables.
   a. **Yes.** Go to Test 4.
   b. **No.** Replace out of range spark plug cable.

4. Carbon Tracking Inspection Test

1. Inspect top of ignition coils for carbon tracking.
2. Is carbon tracking present?
   a. **Yes.** Replace ignition coil.
   b. **No.** Switch ignition coil with known good unit and perform previous test. If spark jumps gap, replace ignition coil. If not, then continue with tests. Go to Test 5.

5. Ignition Coil Primary Wire Continuity Test

1. Disconnect ignition coil [83].
2. Connect BREAKOUT BOX (Part Number:HD-50390-1) and BCM CABLE (Part Number:HD-50390-2) between wire harness [242B], leaving [242A] disconnected. See Initial Diagnostics → DIAGNOSTIC TOOLS.
3. Verify BCM OVERLAY (Part Number:HD-50390-2-P) is in position on BOB.
4. Using TEST CONNECTOR KIT (Part Number:HD-41404), test resistance between BOB [242B] terminal L3 and [83B] terminal B (R/GN) wire.
5. Wiggle connectors while measuring.
6. Is resistance continuously less than 0.5 ohms?

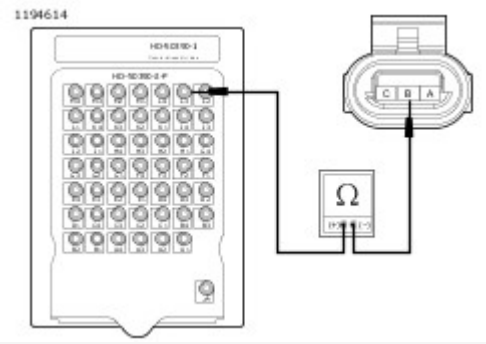

View interactive image

Figure 2.

a. **Yes.** [Go to Test 6.](#)
b. **No.** Repair intermittent on (R/GN) wire.

6. Battery to Main Fuse Block Voltage Drop Test

1. Start engine.
2. Perform voltage drop test between battery (+) and main fuse [64B] terminal A (R) wire.
3. Is voltage drop more than 1.0V?

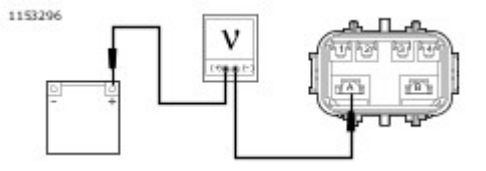

View interactive image

Figure 3.

a. **Yes.** Repair (R) wire between terminal A of [64B] and connection at battery including connections at starter.
b. **No.** Check for corrosion or damage at BCM [259].

See Figure 1 and Figure 2. The TGS is an electronic assembly that replaces the conventional cable operated throttle. Two opposing Hall-effect sensors transmit signals to the ECM. The ECM uses these signals to determine the desired throttle plate position. The ECM controls the motor in the TCA to move the throttle plate to the desired position.

The TGS receives a 5V reference signal from the ECM. As the throttle plate is opened the TGS1 signal voltage increases and TGS2 signal voltage decreases. By design, the sum of the voltages when measured for both TGS1 and TGS2 should equal approximately 5.0V. If the sum of these voltages is not 5.0V, then DTCs are set for TGS1 and/or TGS2.

The ECM monitors and controls the TCA system and generates DTCs when errors are reported by the ECM. Refer to Table 1.

Table 1. Code Description

DTC	DESCRIPTION
P2122	TGS1 low/open
P2123	TGS1 high
P2127	TGS2 low/open
P2128	TGS2 high

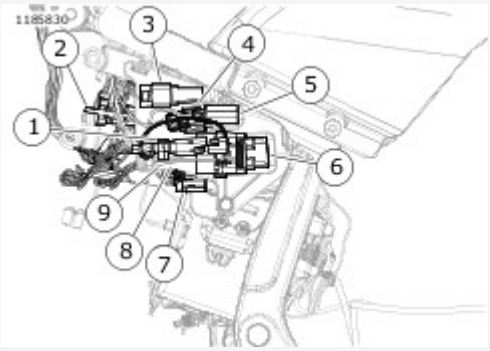

View interactive image

1	Battery tender [281]
2	DLC [91]
3	Termination resistor [319]
4	P&A accessory [325]
5	Fuse holder [332]
6	Fuse block [64]
7	ECM [78-3]
8	ECM [78-2]
9	ECM [78-1] (behind sub caddy)

Figure 1. Behind Left Side Cover

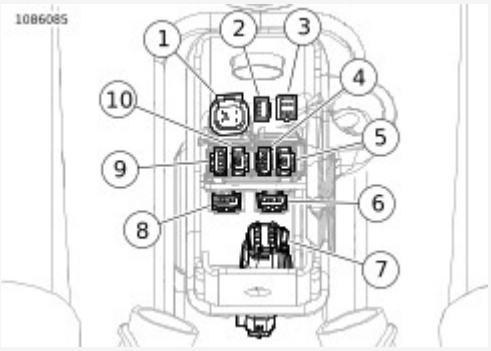

View interactive image

1	Headlamp [38]
2	Console [20]
3	TGS [204]
4	Right front lighting [31R]
5	Front WSS [167]
6	Left front lighting [31L]
7	USB caddy interconnect [329]
8	LHCM [24]
9	RHCM [22-1]
10	RHCM [22-2]

Figure 2. USB Caddy

Connector Information

For additional information about the connectors in the following diagram(s) and diagnostic procedure(s), see **Wiring → Wire Harness Connectors → General**.

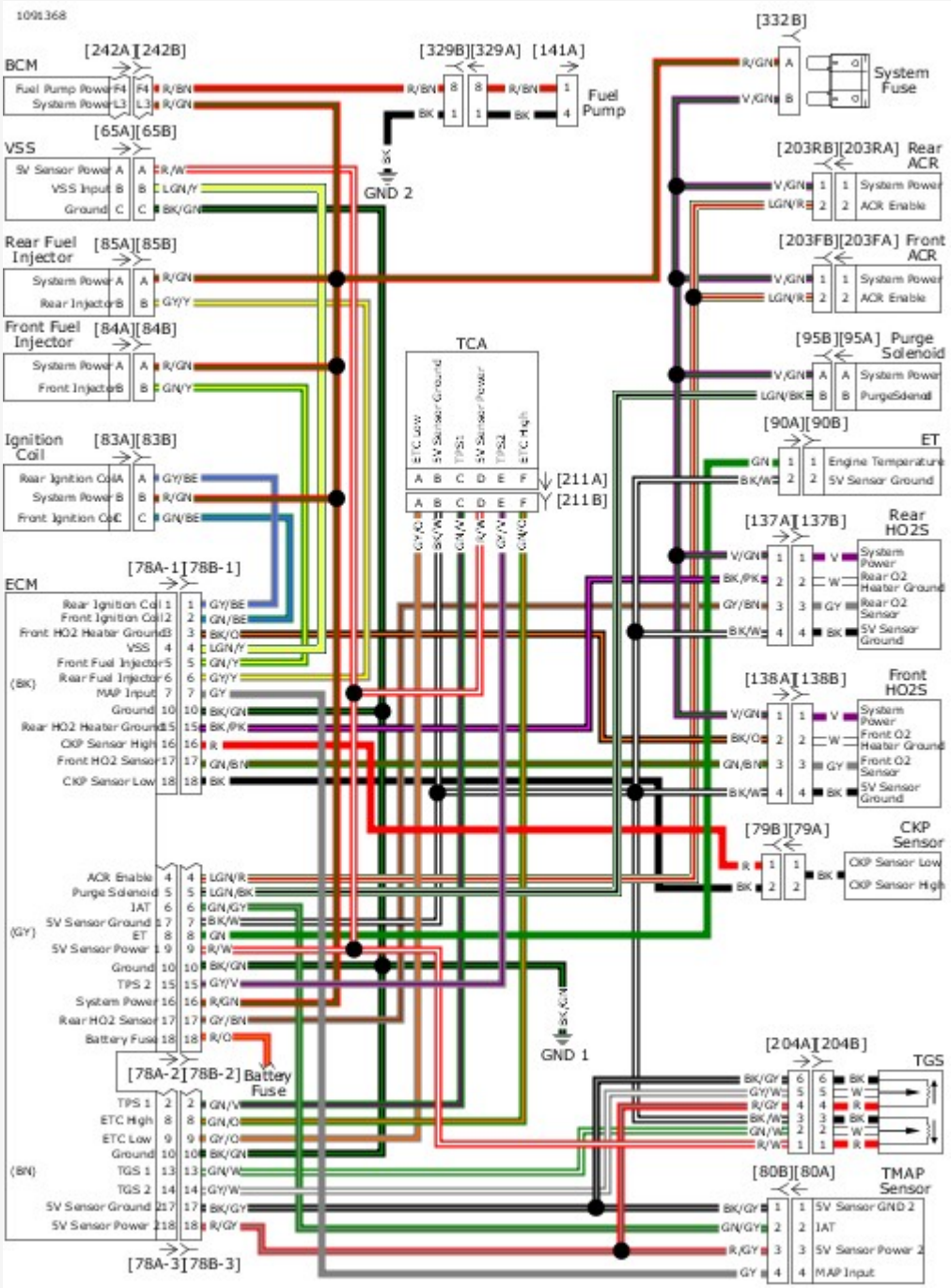

View interactive image

Figure 3. EFI Simplified Schematic

Special Tools

Description	Part Number	Qty.
TERMINAL EXTRACTOR	B-50085	1
TEST CONNECTOR KIT	HD-41404	1
BREAKOUT BOX	HD-50390-1	1
ECM CABLE	HD-50390-4	1
ECM OVERLAY	HD-50390-4-P	1

Table 1. DTC P2122 Diagnostic Faults

POSSIBLE CAUSES
Open in TGS-1 circuit
Short to ground in TGS-1 circuit

NOTE

Always inspect connectors for backed out terminals, improper mating, inoperative locks, improperly formed or damaged terminals, poor terminal-to-wire connection and damaged harnesses when disconnecting any connector.

1. Power Open Test

1. Turn IGN OFF.
2. Connect **BREAKOUT BOX (Part Number:HD-50390-1)** and **ECM CABLE (Part Number:HD-50390-4)** to wiring harness [78B-1], [78B-2] and [78B-3], leaving ECM [78A-1], [78A-2] and [78A-3] disconnected.
3. Verify **ECM OVERLAY (Part Number:HD-50390-4-P)** is in position on BOB.
4. Disconnect TGS [204].
5. Using **TEST CONNECTOR KIT (Part Number:HD-41404)**, test resistance between BOB [78-2] terminal 9 and [204A] terminal 1 (R/W).
6. Is resistance less than 0.5 ohm?

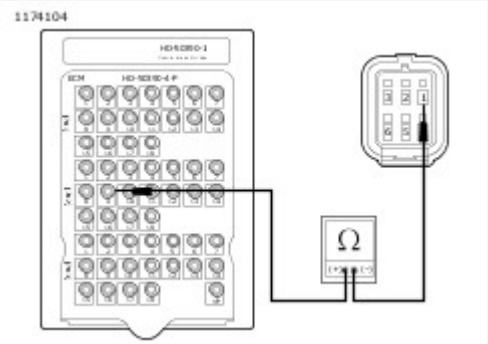

View interactive image

Figure 1.

a. **Yes.** Go to Test 2.
b. **No.** Repair open in (R/W).

2. Signal Open Test

1. Test resistance between BOB [78-3] terminal 13 and [204A] terminal 2 (GN/W).
2. Is resistance less than 0.5 ohm?

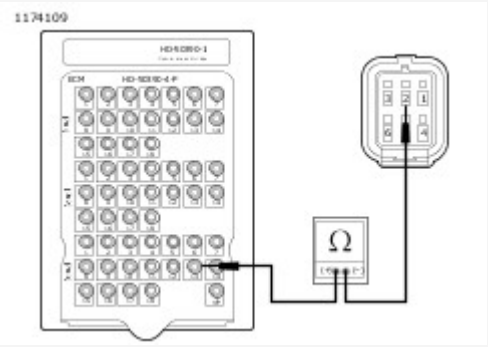

View interactive image

Figure 2.

a. **Yes.** Go to Test 3.
b. **No.** Repair open in (GN/W).

3. Signal Short to Ground Test

1. Test continuity between BOB [78-3] terminal 13 and [78-1] terminal 10.
2. Is continuity present?

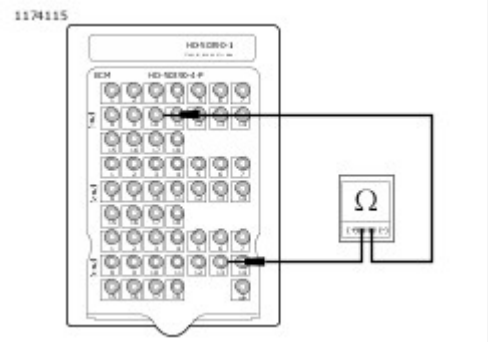

View interactive image

Figure 3.

a. **Yes.** Repair short to ground in (GN/W).
b. **No.** Go to Test 4.

4. Ground Short to Voltage Test

1. Connect [78A-1], [78A-2] and [78A-3] to BOB.
2. Connect [204].
3. Turn IGN ON.
4. Test voltage between BOB [78-2] terminal 7 and [78-1] terminal 10.
5. Is voltage greater than 1.0V?

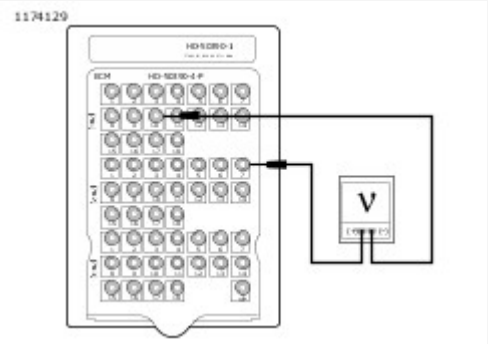

View interactive image

Figure 4.

a. **Yes.** Go to Test 5.
b. **No.** Go to Test 7.

5. ECM Ground Short to Voltage Test

1. Turn IGN OFF.
2. Disconnect [78B-2].
3. Using TERMINAL EXTRACTOR (Part Number:B-50085), remove terminal 7 (BK/W) wire from ECM harness connector [78B-2].
4. Connect [78B-2].
5. Turn IGN ON.
6. Test voltage between extracted terminal 7 and BOB [78-1] terminal 10.
7. Is voltage greater than 1.0V?
   a. **Yes.** Go to Test 6.
   b. **No.** Replace ECM.

6. TGS-1 Ground Short to Voltage Test

1. Turn IGN OFF.
2. Disconnect TGS [204].
3. Turn IGN ON.
4. Test voltage between BOB [78-2] terminal 7 and [78-1] terminal 10.
5. Is voltage greater than 1.0V?

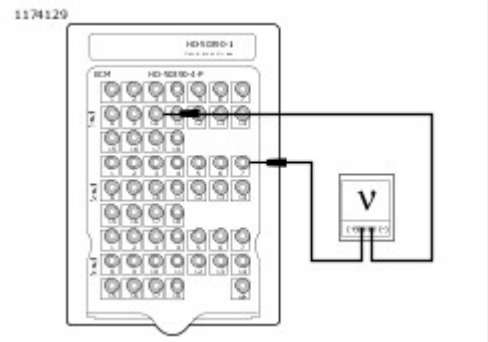

View interactive image

Figure 5.

a. **Yes.** Repair short to voltage on (BK/W).
b. **No.** Replace TGS.

7. Power Short to Ground Test

1. Turn IGN OFF.
2. Test resistance between BOB [78-2] terminal 9 and [78-1] terminal 10.
3. Is resistance less than 200 ohms?

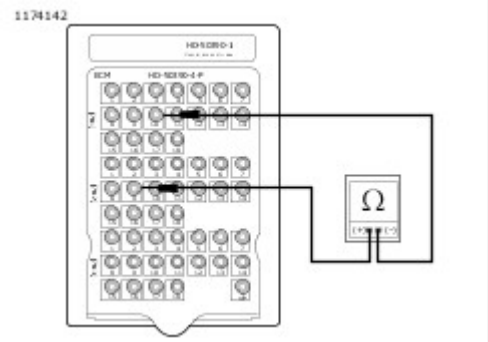

View interactive image

Figure 6.

a. **Yes.** Go to Test 8.
b. **No.** Go to Test 14.

8. Sensor Short to Ground Test

1. Disconnect TGS [204].
2. Test resistance between BOB [78-2] terminal 9 and [78-1] terminal 10.
3. See Figure 6. Is resistance less than 200 ohms?
   a. **Yes.** Go to Test 9.
   b. **No.** Replace TGS.

9. TCA Short to Ground Test

1. Disconnect TCA [211].
2. Test resistance between BOB [78-2] terminal 9 and [78-1] terminal 10.
3. See Figure 6. Is resistance less than 200 ohms?
    a. **Yes, with JSS.** Go to Test 10.
    b. **Yes without JSS.** Go to Test 11.
    c. **No.** Replace TCA.

10. JSS Short to Ground Test

1. Disconnect JSS [131].
2. Test resistance between BOB [78-2] terminal 9 and [78-1] terminal 10.
3. See Figure 6. Is resistance less than 200 ohms?
    a. **Yes.** Go to Test 11.
    b. **No.** Replace JSS.

11. VSS Short to Ground Test

1. Disconnect VSS [65].
2. Test resistance between BOB [78-2] terminal 9 and [78-1] terminal 10.
3. See Figure 6. Is resistance less than 200 ohms?
    a. **Yes.** Go to Test 12.
    b. **No.** Replace VSS.

12. Oil Pressure Sensor to Ground Test

1. Disconnect oil pressure [139].
2. Test continuity between BOB [78-2] terminal 9 and ground.
3. Is continuity present?

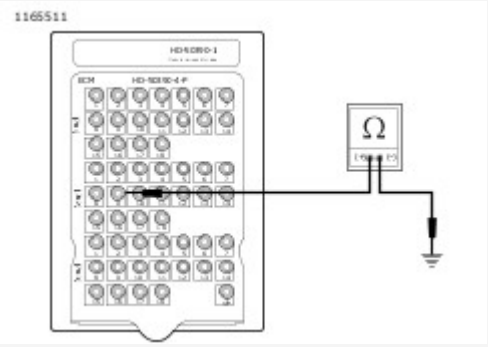

View interactive image

Figure 7.

    a. **Yes.** Go to Test 13.
    b. **No.** Replace oil pressure sensor.

13. ECM Short to Ground Test

1. Disconnect [78A-1], [78A-2] and [78A-3].

2. Test resistance between BOB [78-2] terminal 9 and [78-1] terminal 10.
3. See Figure 6. Is resistance less than 200 ohms?
    a. **Yes.** Repair short to ground in (R/W) wire.
    b. **No.** Replace ECM.

14. DTC Test

1. Clear DTCs.
2. Turn IGN OFF, wait 1 minute.
3. Start vehicle and operate throttle.
4. Check DTCs.
5. Did DTC return?
    a. **Yes.** Go to Test 15.
    b. **No.** Issue could be intermittent. Perform wiggle test.

15. ECM 5V Sensor Power Test

1. Test voltage between BOB [78-2] terminal 9 and [78-2] terminal 10.
2. Is voltage greater than 4.6V?

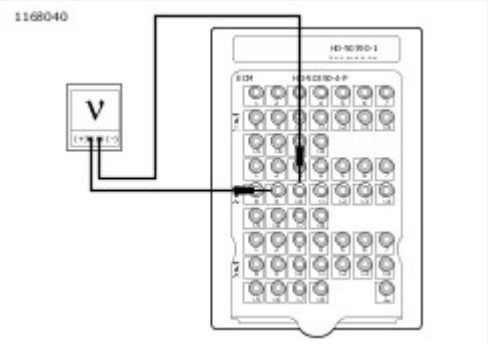

View interactive image

Figure 8.

    a. **Yes.** Go to Test 16.
    b. **No.** Replace ECM.

16. Signal Voltage Test

1. Test voltage between BOB [78-3] terminal 13 and [78-1] terminal 10.
2. Slowly turn throttle to wide open position and observe voltage.
3. Does voltage steadily increase to greater than 4.5V?

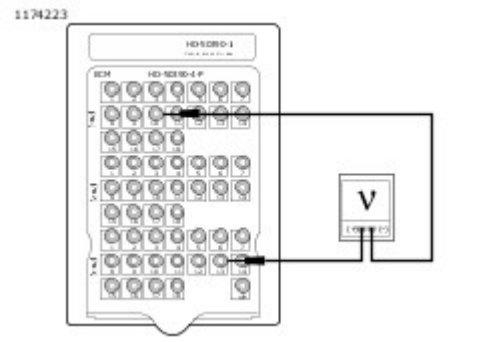

View interactive image

Figure 9.

a. **Yes.** [Go to Test 17.](#)
b. **No.** Replace TGS.

17. ECM 5V Sensor Ground Test

1. Turn IGN OFF, wait 1 minute.
2. Test resistance between BOB [78-2] terminal 7 and [78-1] terminal 10.
3. Is resistance less than 1.0 ohm?

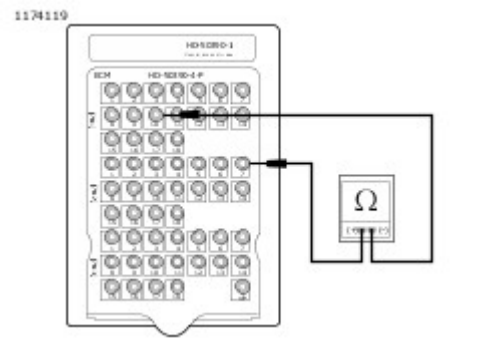

View interactive image

Figure 10.

a. **Yes.** Replace TGS.
b. **No.** Replace ECM.

Special Tools

Description	Part Number	Qty.
TERMINAL EXTRACTOR	B-50085	1
TEST CONNECTOR KIT	HD-41404	1
BREAKOUT BOX	HD-50390-1	1
ECM CABLE	HD-50390-4	1
ECM OVERLAY	HD-50390-4-P	1

Table 1. DTC P2123 Diagnostic Faults

POSSIBLE CAUSES
Short to voltage in sensor signal
Short to voltage in sensor power

NOTE

Always inspect connectors for backed out terminals, improper mating, inoperative locks, improperly formed or damaged terminals, poor terminal-to-wire connection and damaged harnesses when disconnecting any connector.

1. Power Short to Voltage Test

1. Turn IGN OFF.
2. Connect **BREAKOUT BOX (Part Number:HD-50390-1)** and **ECM CABLE (Part Number:HD-50390-4)** to wiring harness [78B-1], [78B-2] and [78B-3], and ECM [78A-1], [78A-2] and [78A-3].
3. Verify **ECM OVERLAY (Part Number:HD-50390-4-P)** is in position on BOB.
4. Turn IGN ON.
5. Using **TEST CONNECTOR KIT (Part Number:HD-41404)**, test voltage between BOB [78-2] terminals 9 and 10.
6. Is voltage greater than 6.0V?

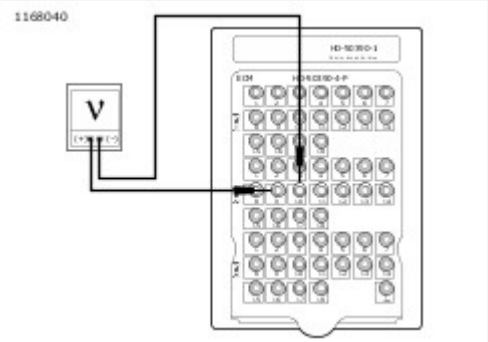

View interactive image

Figure 1.

a. **Yes.** Go to Test 2.
b. **No.** Go to Test 4.

2. ECM Power Short to Voltage Test

1. Turn IGN OFF.
2. Disconnect [78B-2].
3. Using TERMINAL EXTRACTOR (Part Number:B-50085), remove terminal 9 (R/W) wire from ECM harness connector [78B-2].
4. Connect [78B-2].
5. Turn IGN ON.
6. Test voltage between extracted terminal 9 and BOB [78-2] terminal 10.
7. Is voltage greater than 5.0V?
   a. **Yes.** Go to Test 3.
   b. **No.** Replace ECM.

3. TGS-1 Power Short to Voltage Test

1. Turn IGN OFF.
2. Disconnect [78B-2].
3. Insert extracted terminal 9 back into [78B-2].
4. Connect [78B-2].
5. Disconnect TGS [204].
6. Turn IGN ON.
7. Test voltage between BOB [78-2] terminal 9 and ground.
8. Is voltage greater than 6.0V?

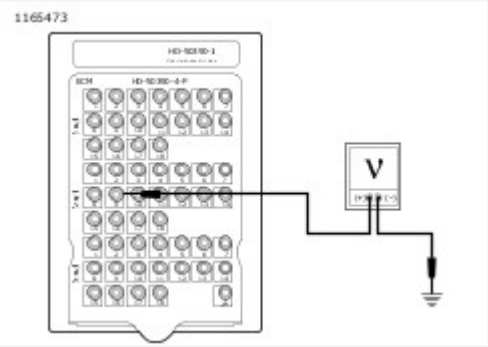

View interactive image

Figure 2.

a. **Yes.** Repair short to voltage in (R/W).
b. **No.** Go to Test 7.

4. Signal Short to Voltage Test

1. Test voltage between BOB [78-3] terminal 13 and [78-2] terminal 10.
2. Is voltage greater than 6.0V?

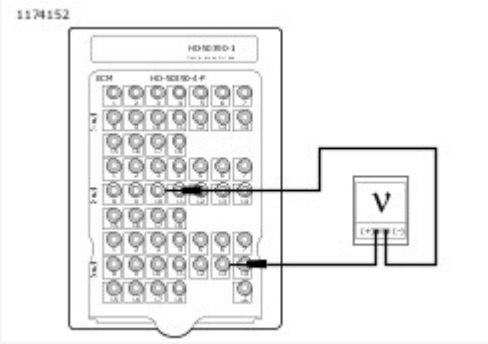

View interactive image

Figure 3.

a. **Yes.** Go to Test 5.
b. **No.** Issue could be intermittent. Perform wiggle test.

5. ECM Signal Short to Voltage Test

1. Turn IGN OFF.
2. Disconnect [78B-3].
3. Using TERMINAL EXTRACTOR (Part Number:B-50085), remove terminal 13 (GN/W) wire from ECM harness connector [78B-3].
4. Connect [78B-2].
5. Turn IGN ON.
6. Test voltage between extracted terminal 13 and BOB [78-2] terminal 10.
7. Is voltage greater than 6.0V?
   a. **Yes.** Go to Test 6.
   b. **No.** Replace ECM.

6. TGS-1 Signal Short to Voltage Test

1. Turn IGN OFF.
2. Disconnect [78B-3].
3. Insert extracted terminal 13 back into [78B-3].
4. Connect [78B-3].
5. Disconnect TGS [204].
6. Turn IGN ON.
7. Test voltage between BOB [78-3] terminal 13 and [78-1] terminal 10.
8. Is voltage greater than 6.0V?

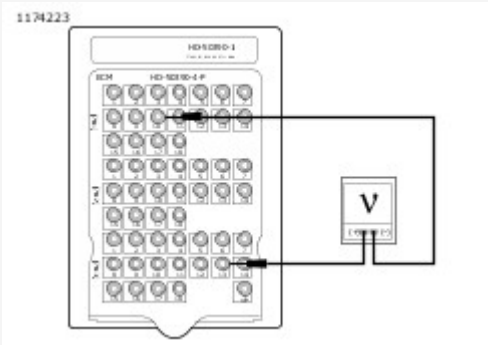

View interactive image

View interactive image

Figure 4.

a. **Yes.** Repair short to voltage in (GN/W).
b. **No.** Go to Test 7.

7. DTC Test

1. Clear DTCs.
2. Turn IGN OFF, wait 1 minute.
3. Start vehicle and operate throttle.
4. Check DTCs.
5. Did DTC return?
   a. **Yes.** Go to Test 8.
   b. **No.** Issue could be intermittent. Perform wiggle test.

8. ECM 5V Sensor Power Test

1. Test voltage between BOB [78-2] terminal 9 and [78-1] terminal 10.
2. Is voltage greater than 4.6V?

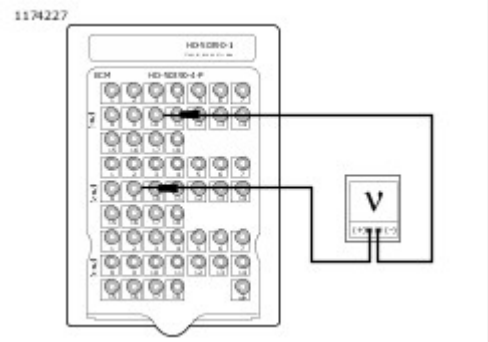

View interactive image

Figure 5.

a. **Yes.** Go to Test 9.
b. **No.** Replace ECM.

9. Signal Voltage Test

1. Test voltage between BOB [78-3] terminal 13 and [78-1] terminal 10.
2. Slowly turn throttle to wide open position and observe voltage.
3. Does voltage steadily increase to greater than 4.5V?

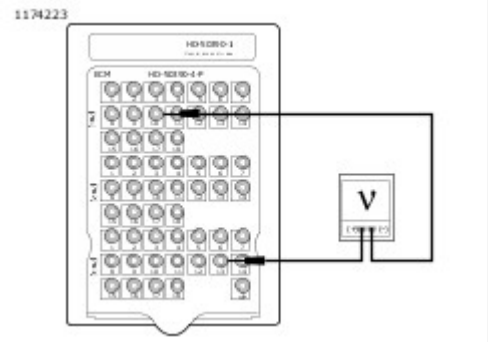

View interactive image

Figure 6.

a. **Yes.** [Go to Test 10.](#)
b. **No.** Replace TGS.

10. ECM 5V Sensor Ground Test

1. Turn IGN OFF, wait 1 minute.
2. Test resistance between BOB [78-2] terminal 7 and [78-1] terminal 10.
3. Is resistance less than 1.0 ohm?

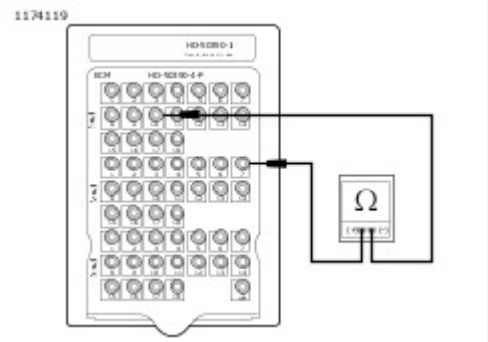

View interactive image

Figure 7.

a. **Yes.** Replace TGS.
b. **No.** Replace ECM.

Special Tools

Description	Part Number	Qty.
TERMINAL EXTRACTOR	B-50085	1
TEST CONNECTOR KIT	HD-41404	1
BREAKOUT BOX	HD-50390-1	1
ECM CABLE	HD-50390-4	1
ECM OVERLAY	HD-50390-4-P	1

Table 1. DTC P2127 Diagnostic Faults

POSSIBLE CAUSES
Open in TGS-2 circuit
Short to ground in TGS-2 circuit

NOTE

Always inspect connectors for backed out terminals, improper mating, inoperative locks, improperly formed or damaged terminals, poor terminal-to-wire connection and damaged harnesses when disconnecting any connector.

1. Power Open Test

1. Turn IGN OFF.
2. Connect **BREAKOUT BOX (Part Number:HD-50390-1)** and **ECM CABLE (Part Number:HD-50390-4)** to wiring harness [78B-1], [78B-2] and [78B-3], leaving ECM [78A-1], [78A-2] and [78A-3] disconnected.
3. Verify **ECM OVERLAY (Part Number:HD-50390-4-P)** is in position on BOB.
4. Disconnect TGS [204].
5. Using **TEST CONNECTOR KIT (Part Number:HD-41404)**, test resistance between BOB [78-3] terminal 18 and [204A] terminal 4 (R/GY).
6. Is resistance less than 0.5 ohm?

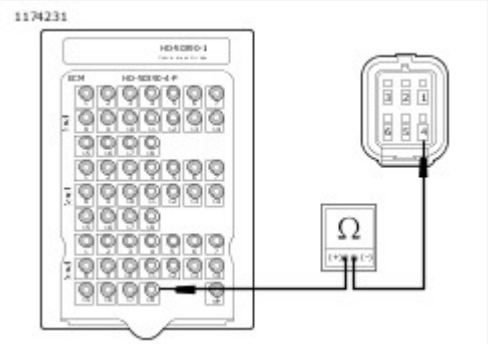

View interactive image

Figure 1.

a. **Yes.** Go to Test 2.
b. **No.** Repair open in (R/GY).

2. Signal Open Test

1. Test resistance between BOB [78-3] terminal 14 and [204A] terminal 5 (GY/W).
2. Is resistance less than 0.5 ohm?

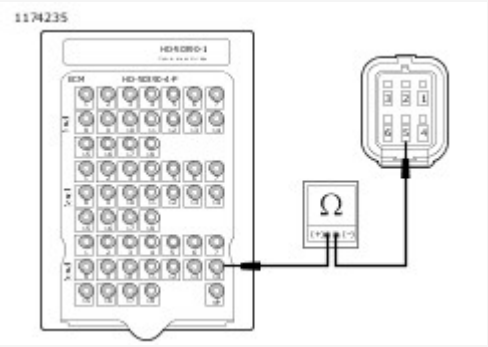

View interactive image

Figure 2.

a. **Yes.** Go to Test 3.
b. **No.** Repair open in (GY/W).

3. Signal Short to Ground Test

1. Test continuity between BOB [78-3] terminal 14 and [78-1] terminal 10.
2. Is continuity present?

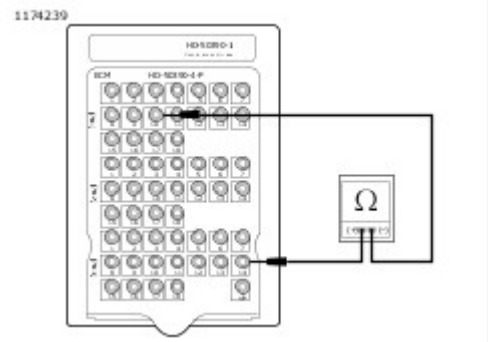

View interactive image

Figure 3.

a. **Yes.** Repair short to ground in (GY/W).
b. **No.** Go to Test 4.

4. Ground Short to Voltage Test

1. Connect [78A-1], [78A-2] and [78A-3] to BOB.
2. Connect [204].
3. Turn IGN ON.
4. Test voltage between BOB [78-3] terminal 17 and [78-1] terminal 10.
5. Is voltage greater than 1.0V?

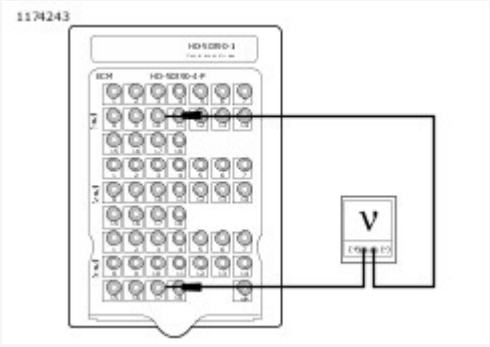

View interactive image

Figure 4.

a. **Yes.** Go to Test 5.
b. **No.** Go to Test 7.

5. ECM Ground Short to Voltage Test

1. Turn IGN OFF.
2. Disconnect [78B-3].
3. Using TERMINAL EXTRACTOR (Part Number:B-50085), remove terminal 17 (BK/GY) wire from ECM harness connector [78B-3].
4. Connect [78B-3].
5. Turn IGN ON.
6. Test voltage between extracted terminal 17 and BOB [78-1] terminal 10.
7. Is voltage greater than 1.0V?
   a. **Yes.** Go to Test 6.
   b. **No.** Replace ECM.

6. TGS-1 Ground Short to Voltage Test

1. Turn IGN OFF.
2. Disconnect TGS [204].
3. Turn IGN ON.
4. Test voltage between BOB [78-3] terminal 17 and [78-1] terminal 10.
5. Is voltage greater than 1.0V?

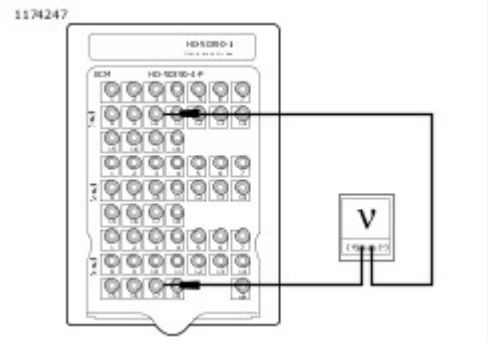

View interactive image

Figure 5.

a. **Yes.** Repair short to voltage on (BK/GY).
b. **No.** Replace TGS.

7. Power Short to Ground Test

1. Turn IGN OFF.
2. Test resistance between BOB [78-3] terminal 18 and [78-1] terminal 10.
3. Is resistance less than 200 ohms?

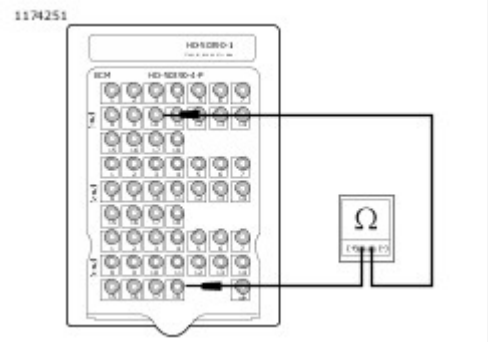

View interactive image

Figure 6.

a. **Yes.** Go to Test 8.
b. **No.** Go to Test 11.

8. Sensor Short to Ground Test

1. Disconnect TGS [204].
2. Test resistance between BOB [78-3] terminal 18 and [78-1] terminal 10.
3. See Figure 6. Is resistance less than 200 ohms?
   a. **Yes.** Go to Test 9.
   b. **No.** Replace TGS.

9. TMAP Short to Ground Test

1. Disconnect TMAP [80].
2. Test resistance between BOB [78-3] terminal 18 and [78-1] terminal 10.
3. See Figure 6. Is resistance less than 200 ohms?
    a. **Yes.** Go to Test 10.
    b. **No.** Replace TMAP.

10. ECM Short to Ground Test

1. Disconnect [78A-1], [78A-2] and [78A-3].
2. Test resistance between BOB [78-3] terminal 18 and [78-1] terminal 10.
3. See Figure 6. Is resistance less than 200 ohms?
    a. **Yes.** Repair short to ground in (R/GY) wire.
    b. **No.** Replace ECM.

11. DTC Test

1. Clear DTCs.
2. Turn IGN OFF, wait 1 minute.
3. Start vehicle and operate throttle.
4. Check DTCs.
5. Did DTC return?
    a. **Yes.** Go to Test 12.
    b. **No.** Issue could be intermittent. Perform wiggle test.

12. ECM 5V Sensor Power Test

1. Test voltage between BOB [78-3] terminal 18 and [78-1] terminal 10.
2. Is voltage greater than 4.6V?

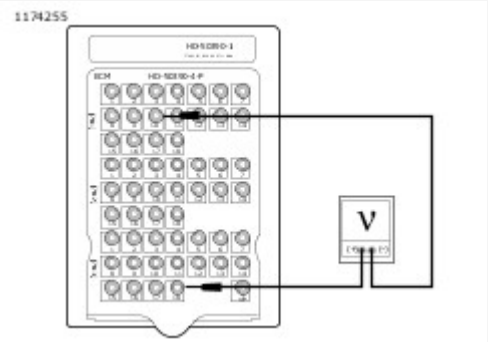

View interactive image

Figure 7.

    a. **Yes.** Go to Test 13.
    b. **No.** Replace ECM.

13. Signal Voltage Test

1. Test voltage between BOB [78-3] terminal 14 and [78-1] terminal 10.

2. Slowly turn throttle to wide open position and observe voltage.
3. Does voltage steadily decrease to less than 0.5V?

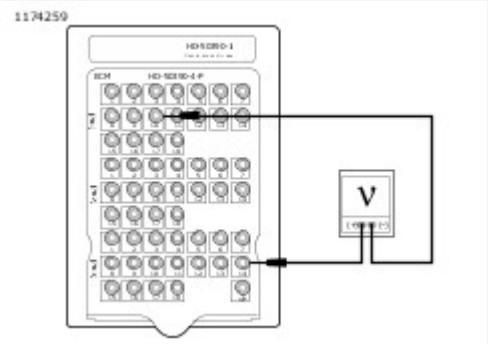

View interactive image

Figure 8.

a. **Yes.** [Go to Test 14.](#)
b. **No.** Replace TGS.

14. ECM 5V Sensor Ground Test

1. Turn IGN OFF, wait 1 minute.
2. Test resistance between BOB [78-3] terminal 17 and [78-1] terminal 10.
3. Is resistance less than 1.0 ohm?

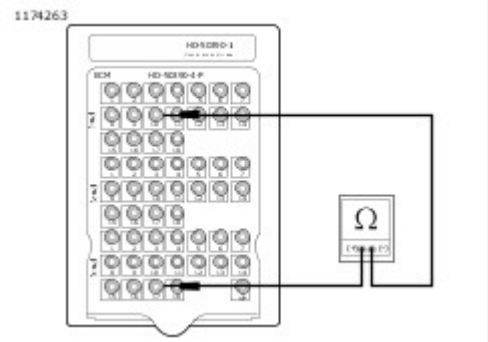

View interactive image

Figure 9.

a. **Yes.** Replace TGS.
b. **No.** Replace ECM.

Special Tools

Description	Part Number	Qty.
TERMINAL EXTRACTOR	B-50085	1
TEST CONNECTOR KIT	HD-41404	1
BREAKOUT BOX	HD-50390-1	1
ECM CABLE	HD-50390-4	1
ECM OVERLAY	HD-50390-4-P	1

Table 1. DTC P2128 Diagnostic Faults

POSSIBLE CAUSES
Short to voltage in sensor signal
Short to voltage in sensor power

NOTE

Always inspect connectors for backed out terminals, improper mating, inoperative locks, improperly formed or damaged terminals, poor terminal-to-wire connection and damaged harnesses when disconnecting any connector.

1. Power Short to Voltage Test

1. Turn IGN OFF.
2. Connect **BREAKOUT BOX (Part Number:HD-50390-1)** and **ECM CABLE (Part Number:HD-50390-4)** to wiring harness [78B-1], [78B-2] and [78B-3], and ECM [78A-1], [78A-2] and [78A-3].
3. Verify **ECM OVERLAY (Part Number:HD-50390-4-P)** is in position on BOB.
4. Turn IGN ON.
5. Using **TEST CONNECTOR KIT (Part Number:HD-41404)**, test voltage between BOB [78-3] terminal 18 and [78-1] terminal 10.
6. Is voltage greater than 6.0V?

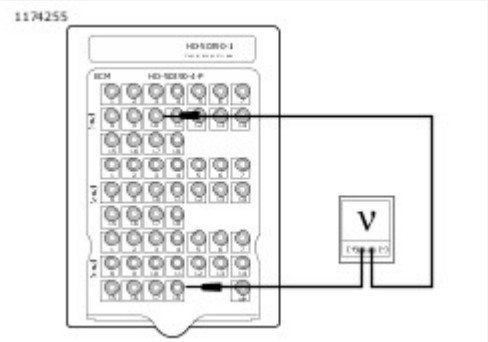

View interactive image

Figure 1.

a. **Yes.** Go to Test 2.
b. **No.** Go to Test 4.

2. ECM Power Short to Voltage Test

1. Turn IGN OFF.
2. Disconnect [78B-3].
3. Using TERMINAL EXTRACTOR (Part Number:B-50085), remove terminal 18 (R/GY) wire from ECM harness connector [78B-3].
4. Connect [78B-3].
5. Turn IGN ON.
6. Test voltage between extracted terminal 18 and BOB [78-1] terminal 10.
7. Is voltage greater than 5.0V?
   a. **Yes.** Go to Test 3.
   b. **No.** Replace ECM.

3. TGS-2 Power Short to Voltage Test

1. Turn IGN OFF.
2. Disconnect [78B-3].
3. Insert extracted terminal 18 back into [78B-3].
4. Connect [78B-3].
5. Disconnect TGS [204].
6. Turn IGN ON.
7. Test voltage between BOB [78-3] terminal 18 and ground.
8. Is voltage greater than 6.0V?

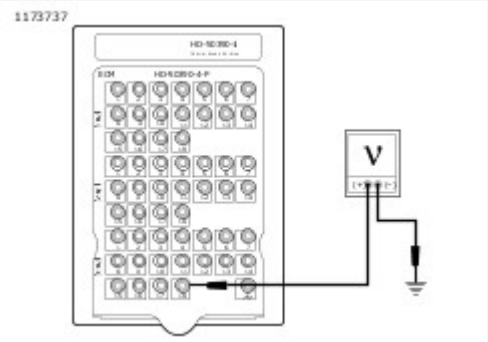

View interactive image

Figure 2.

a. **Yes.** Repair short to voltage in (R/GY).
b. **No.** Go to Test 7.

4. Signal Short to Voltage Test

1. Test voltage between BOB [78-3] terminal 14 and [78-1] terminal 10.
2. Is voltage greater than 6.0V?

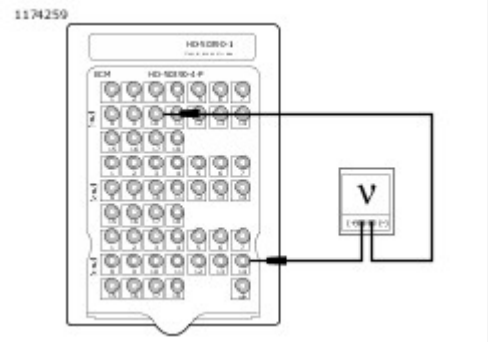

View interactive image

Figure 3.

a. **Yes.** Go to Test 5.
b. **No.** Issue could be intermittent. Perform wiggle test.

5. ECM Signal Short to Voltage Test

1. Turn IGN OFF.
2. Disconnect [78B-3].
3. Using TERMINAL EXTRACTOR (Part Number:B-50085), remove terminal 14 (GY/W) wire from ECM harness connector [78B-3].
4. Connect [78B-3].
5. Turn IGN ON.
6. Test voltage between extracted terminal 14 and BOB [78-1] terminal 10.
7. Is voltage greater than 6.0V?
   a. **Yes.** Go to Test 6.
   b. **No.** Replace ECM.

6. TGS-2 Signal Short to Voltage Test

1. Turn IGN OFF.
2. Disconnect [78B-3].
3. Insert extracted terminal 14 back into [78B-3].
4. Connect [78B-3].
5. Disconnect TGS [204].
6. Turn IGN ON.
7. Test voltage between BOB [78-3] terminal 14 and ground.
8. Is voltage greater than 6.0V?

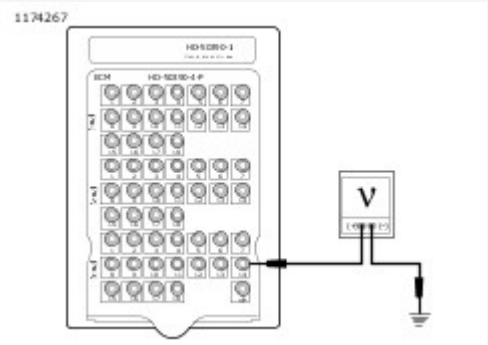

View interactive image

View interactive image

Figure 4.

a. **Yes.** Repair short to voltage in (GY/W).
b. **No.** Go to Test 7.

7. DTC Test

1. Clear DTCs.
2. Turn IGN OFF, wait 1 minute.
3. Start vehicle and operate throttle.
4. Check DTCs.
5. Did DTC return?
   a. **Yes.** Go to Test 8.
   b. **No.** Issue could be intermittent. Perform wiggle test.

8. ECM 5V Sensor Power Test

1. Test voltage between BOB [78-3] terminal 18 and [78-1] terminal 10.
2. Is voltage greater than 4.6V?

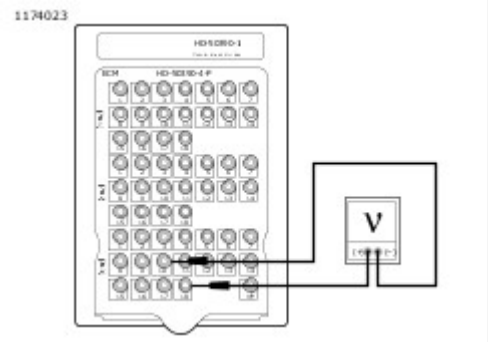

View interactive image

Figure 5.

a. **Yes.** Go to Test 9.
b. **No.** Replace ECM.

9. Signal Voltage Test

1. Test voltage between BOB [78-3] terminal 14 and [78-1] terminal 10.
2. Slowly turn throttle to wide open position and observe voltage.
3. See Figure 5. Does voltage steadily decrease to less than 0.5V?
   a. **Yes.** Go to Test 10.
   b. **No.** Replace TGS.

10. ECM 5V Sensor Ground Test

1. Turn IGN OFF, wait 1 minute.
2. Test resistance between BOB [78-3] terminal 17 and [78-1] terminal 10.
3. Is resistance less than 1.0 ohm?

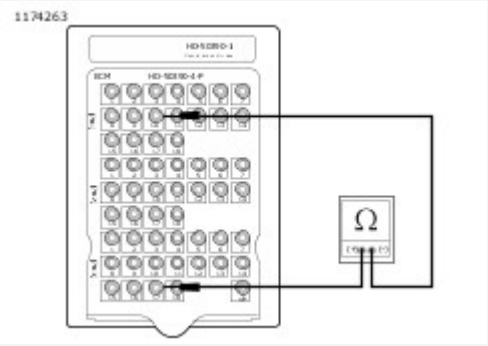

View interactive image

Figure 6.

a. **Yes.** Replace TGS.
b. **No.** Replace ECM.

The ECM sets DTC P2176 when it determines the zero position of the throttle plate has not been successfully learned.

At power up, the ECM adjusts the throttle plate to the limp-home position, then begins to move the throttle plate closed. The ECM monitors and verifies the amount of movement that occurred. The throttle plate minimum position is held briefly then verified against the expected minimum and maximum range of throttle. If the zero position is found within range, then the position is stored.

If the ECM is not able to learn the minimum position or if the learning fails four consecutive ignition cycles, the ECM sets DTC P2176. Refer to Table 1.

Table 1. Code Description

DTC	DESCRIPTION
P2176	ETC zero position learning error

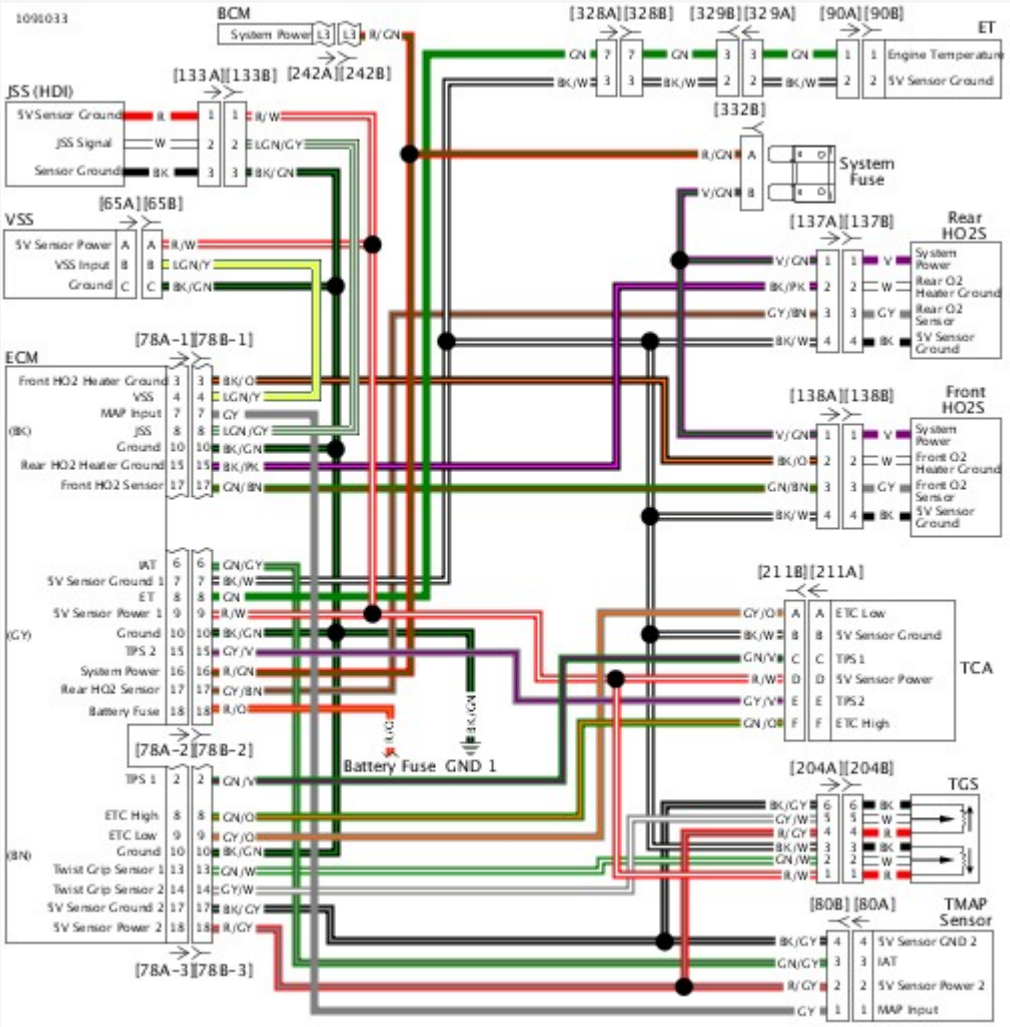

View interactive image

Figure 1. Sensor Circuit

Special Tools

Description	Part Number	Qty.
TEST CONNECTOR KIT	HD-41404	1
BREAKOUT BOX	HD-50390-1	1
ECM CABLE	HD-50390-4	1
ECM OVERLAY	HD-50390-4-P	1

Table 1. DTC P2176 Diagnostic Faults

POSSIBLE CAUSES
Induction module malfunction
Mechanical interference

1. System Voltage Test

1. Turn IGN OFF.
2. Connect **BREAKOUT BOX (Part Number:HD-50390-1)** and **ECM CABLE (Part Number:HD-50390-4)** to wiring harness [78B-1], [78B-2] and [78B-3], and ECM [78A-1], [78A-2] and [78A-3].
3. Verify **ECM OVERLAY (Part Number:HD-50390-4-P)** is in position on BOB.
4. Turn IGN ON.
5. Using **TEST CONNECTOR KIT (Part Number:HD-41404)**, test voltage between BOB [78-2] terminal 16 and ground.
6. Is battery voltage present?

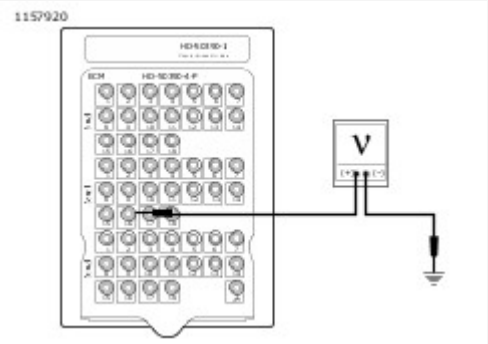

View interactive image

Figure 1.

a. **Yes.** **Go to Test 2.**
b. **No.** See **Serial Data → NO VEHICLE POWER OR LOST COMMUNICATION DTCS**.

2. Internal Damage Test

1. Test voltage between BOB [78-3] terminal 8 and ground and terminal 9 and ground.

2. Is battery voltage present?

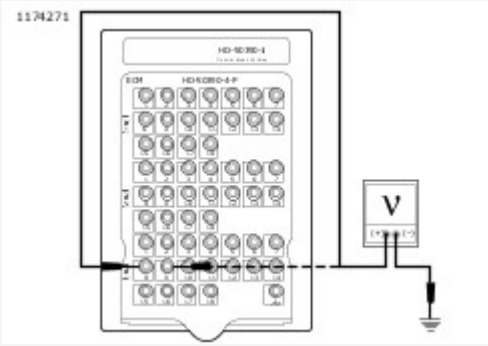

View interactive image

Figure 2.

a. **Yes.** Go to Test 3.
b. **No.** Replace ECM.

3. Air Inlet Interference Test

1. Inspect air inlet. Check for foreign debris and/or mechanical interference to throttle plate.
2. Were any issues found?
   a. **Yes.** Go to Test 4.
   b. **No.** Replace induction module.

4. Validation Test

1. Clear inlet. Check throttle plate movement.
2. Clear DTCs.
3. Start engine and operate throttle.
4. Check DTCs.
5. Did DTC P2176 set?
   a. **Yes.** Replace induction module.
   b. **No.** Repair complete.

See Figure 1 and Figure 2. The ECM sets DTCs when it determines that a correlation error exists for either the TP sensor or the TGS.

The two TP sensors work opposite of each other. As the throttle plate opens, TPS1 voltage ranges from 0.0-5.0V, while TPS2 voltage ranges from 5.0-0.0V. The sum of the two TPS voltages should always measure approximately 5.0V.

The two TGSs work the same way. As the TGS is opened, TGS1 voltage increases and TGS2 voltage decreases. The sum of these two voltages should always measure approximately 5.0V. If either component fails to correlate the proper voltage or has out-of-range voltage conditions, the ECM will set a DTC. Refer to Table 1.

Table 1. Code Description

DTC	DESCRIPTION
P2135	TPS correlation error
P2138	TGS correlation error

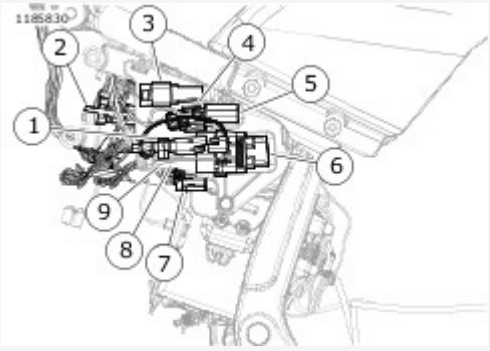

View interactive image

1	Battery tender [281]
2	DLC [91]
3	Termination resistor [319]
4	P&A accessory [325]
5	Fuse holder [332]
6	Fuse block [64]
7	ECM [78-3]
8	ECM [78-2]
9	ECM [78-1] (behind sub caddy)

Figure 1. Behind Left Side Cover

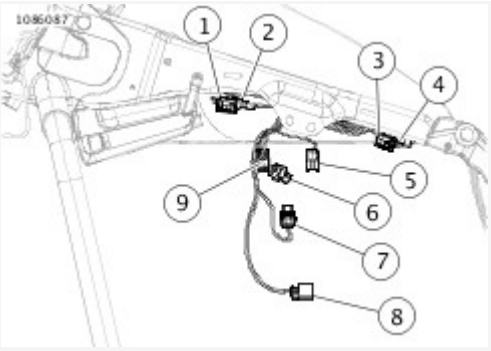

View interactive image

1	Front knock sensor [315]
2	Front ACR [203F]
3	Rear knock sensor [316]
4	Rear ACR [203R]
5	Rear injector [85]
6	TMAP [80]
7	Ignition coil [83]
8	Throttle control [211]
9	Front injector [84]

Figure 2. Engine

Connector Information

For additional information about the connectors in the following diagram(s) and diagnostic procedure(s), see **Wiring → Wire Harness Connectors → General**.

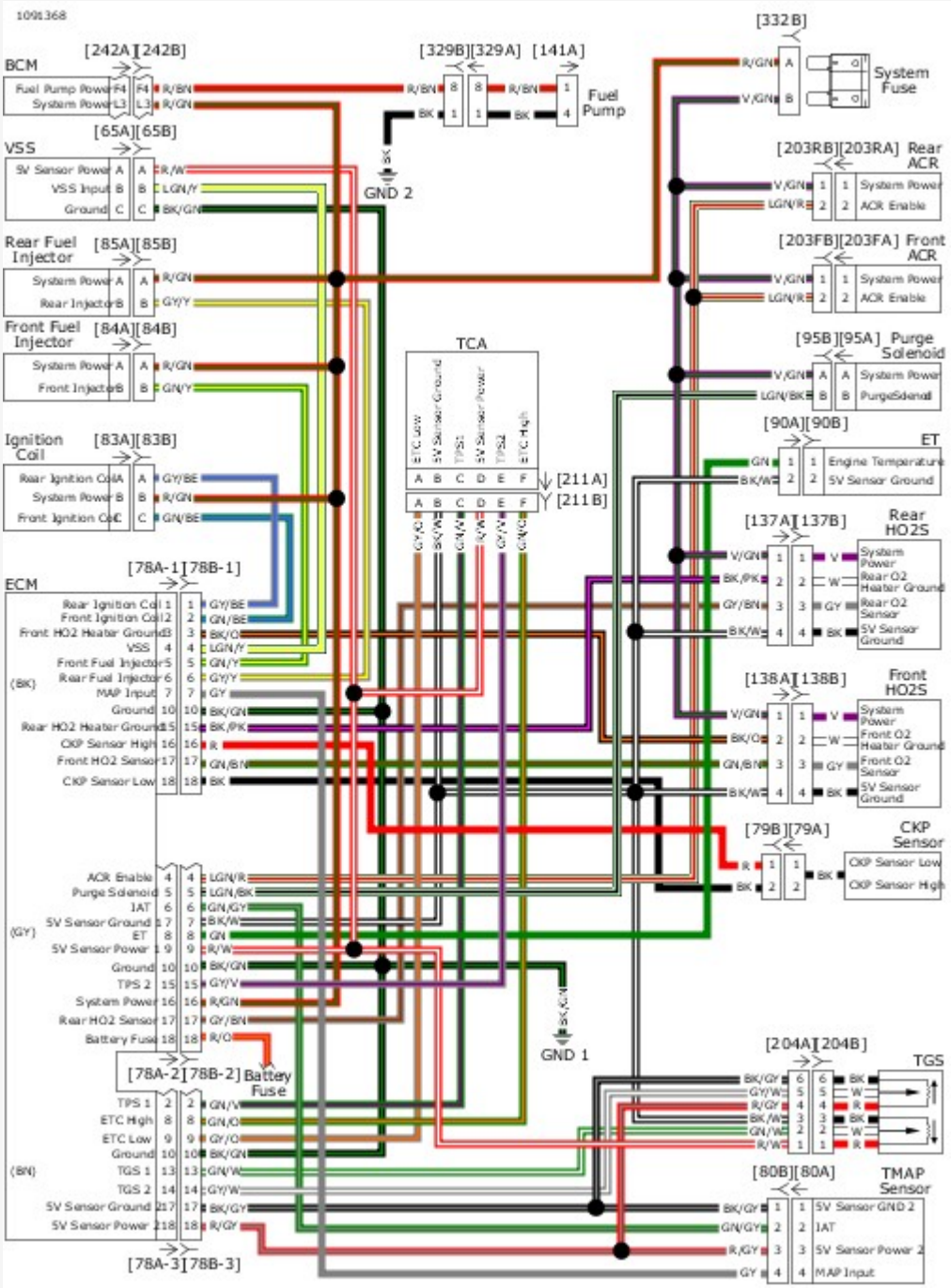

View interactive image

Figure 3. EFI Simplified Schematic

Special Tools

Description	Part Number	Qty.
TEST CONNECTOR KIT	HD-41404	1
BREAKOUT BOX	HD-50390-1	1
ECM CABLE	HD-50390-4	1
ECM OVERLAY	HD-50390-4-P	1

Table 1. DTC P2135 Diagnostic Faults

POSSIBLE CAUSES
Open in TPS-1 circuit
Short to ground in TPS-1 circuit
Short to voltage in TPS-1 circuit
Open in TPS-2 circuit
Short to ground in TPS-2 circuit
Short to voltage in TPS-2 circuit
Short to voltage in sensor power circuit

1. TPS-1 Resistance Test

1. Turn IGN OFF.
2. Connect **BREAKOUT BOX (Part Number:HD-50390-1)** and **ECM CABLE (Part Number:HD-50390-4)** to wiring harness [78B-1], [78B-2] and [78B-3], leaving ECM [78A-1], [78A-2] and [78A-3] disconnected. See **Initial Diagnostics → DIAGNOSTIC TOOLS**.
3. Verify **ECM OVERLAY (Part Number:HD-50390-4-P)** is in position on BOB.
4. Disconnect TCA [211].
5. Using **TEST CONNECTOR KIT (Part Number:HD-41404)**, test resistance between BOB [78-3] terminal 2 and [211B] terminal C.
6. Is resistance less than 0.5 ohm?

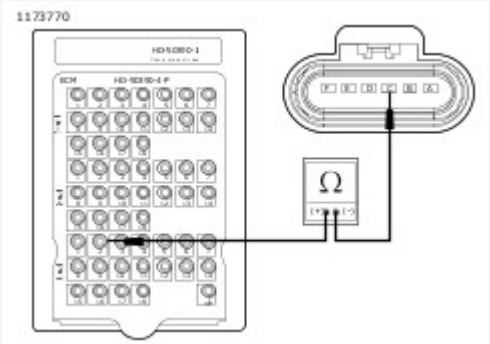

View interactive image

View interactive image

Figure 1.

a. **Yes.** Go to Test 2.
b. **No.** Repair open in (GN/V) wire.

2. TPS-1 Short to Ground Test

1. Test continuity between BOB [78-3] terminal 2 and [78-2] terminal 7.
2. Is continuity present?

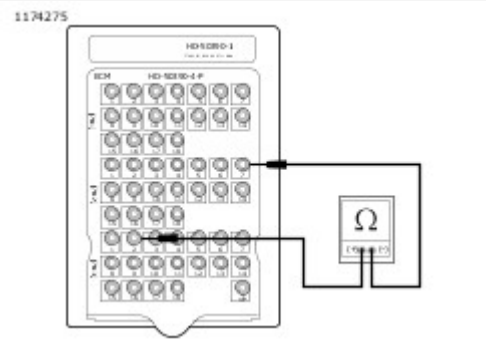

View interactive image

Figure 2.

a. **Yes.** Repair short to ground in (GN/V) wire.
b. **No.** Go to Test 3.

3. TPS-1 Short to Voltage Test

1. Test continuity between BOB [78-3] terminal 2 and [78-2] terminal 9.
2. Is continuity present?

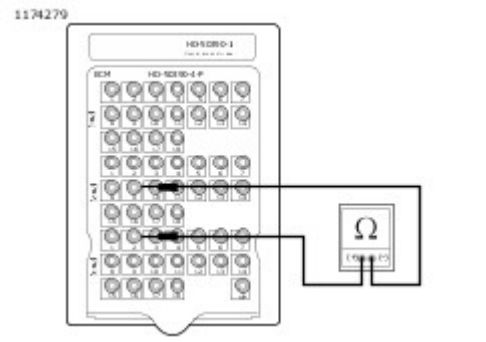

View interactive image

Figure 3.

a. **Yes.** Repair short between (GN/V) and (R/W) wires.
b. **No.** Go to Test 4.

4. TPS-2 Continuity Test

1. Test resistance between BOB [78-2] terminal 15 and [211B] terminal E.
2. Is resistance less than 0.5 ohm?

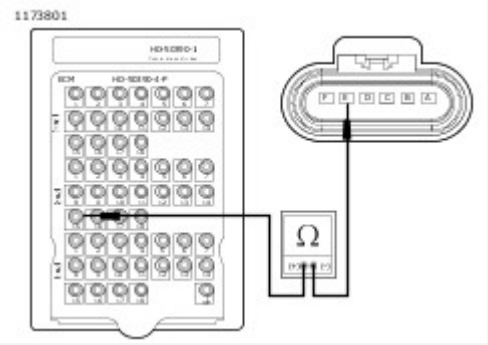

View interactive image

Figure 4.

a. **Yes.** Go to Test 5.
b. **No.** Repair open in (GY/V) wire.

5. TPS-2 Short to Ground Test

1. Test continuity between BOB [78-2] terminals 15 and 7.
2. Is continuity present?

Figure 5.

a. **Yes.** Repair short to ground in (GY/V) wire.
b. **No.** Go to Test 6.

6. TPS-2 Short to Voltage Test

1. Test continuity between BOB [78-2] terminals 15 and 9.
2. Is continuity present?

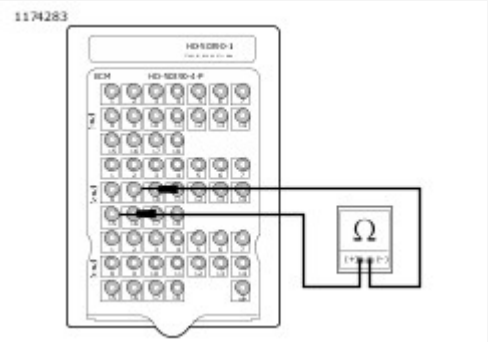

View interactive image

Figure 6.

a. **Yes.** Repair short between (GY/V) and (R/W) wires.
b. **No.** Go to Test 7.

7. TPS-2 Circuit Test

1. Connect [78A-1], [78A-2] and [78A-3].
2. Turn IGN ON.
3. Test voltage between BOB [78-2] terminals 15 and 7.
4. Is voltage greater than 5.25V?

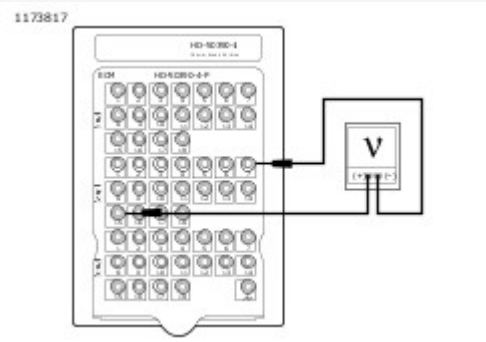

View interactive image

Figure 7.

a. **Yes.** Repair short to voltage on (GY/V) wire.
b. **No.** Go to Test 8.

8. TPS-1 Circuit Test

1. Test voltage between BOB [78-3] terminals 2 and [78-2] terminal 7.
2. Is voltage greater than 5.25V?

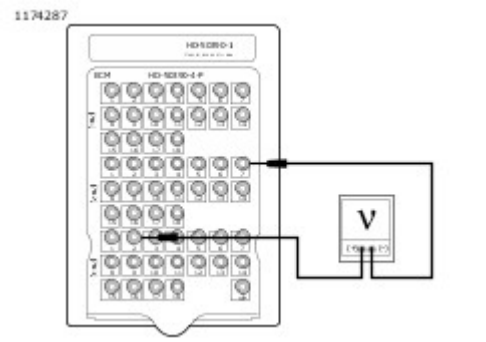

View interactive image

Figure 8.

a. **Yes.** Repair short to voltage on (R/W) wire.
b. **No.** Go to Test 9.

9. Ground Circuit Open Test

1. Connect [211].
2. Clear DTCs.
3. Start vehicle. Operate throttle.
4. Did DTC return?
    a. **Yes.** Replace TCA.
    b. **No.** Operation normal.

Special Tools

Description	Part Number	Qty.
TEST CONNECTOR KIT	HD-41404	1
BREAKOUT BOX	HD-50390-1	1
ECM CABLE	HD-50390-4	1
ECM OVERLAY	HD-50390-4-P	1

Table 1. DTC P2138 Diagnostic Faults

POSSIBLE CAUSES
Open or high resistance in TGS-1 circuit
Open or high resistance in TGS-2 circuit
Open or high resistance in sensor ground 1
Open or high resistance in sensor ground 2

NOTE

Always inspect connectors for backed out terminals, improper mating, inoperative locks, improperly formed or damaged terminals, poor terminal-to-wire connection and damaged harnesses when disconnecting any connector.

1. TGS-1 Signal Wire Resistance Test

1. Turn IGN OFF.
2. Connect **BREAKOUT BOX (Part Number:HD-50390-1)** and **ECM CABLE (Part Number:HD-50390-4)** to wiring harness [78B-1], [78B-2] and [78B-3], leaving ECM [78A-1], [78A-2] and [78A-3] disconnected.
3. Verify **ECM OVERLAY (Part Number:HD-50390-4-P)** is in position on BOB.
4. Disconnect TGS [204].
5. Using **TEST CONNECTOR KIT (Part Number:HD-41404)**, test resistance between BOB [78-3] terminal 13 and [204A] terminal 2.
6. Is resistance less than 0.5 ohm?

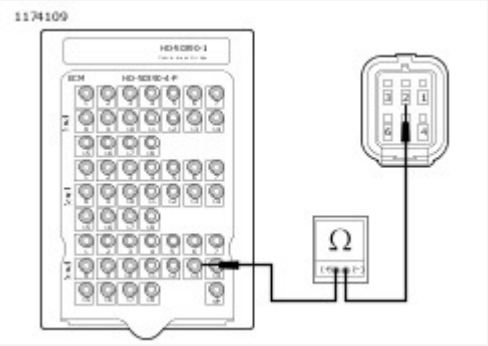

View interactive image

View interactive image

Figure 1.

a. **Yes.** Go to Test 2.
b. **No.** Repair open in (GN/W).

2. TGS-1 Power Wire Resistance Test

1. Test resistance between BOB [78-2] terminal 9 and [204A] terminal 1.
2. Is resistance less than 0.5 ohm?

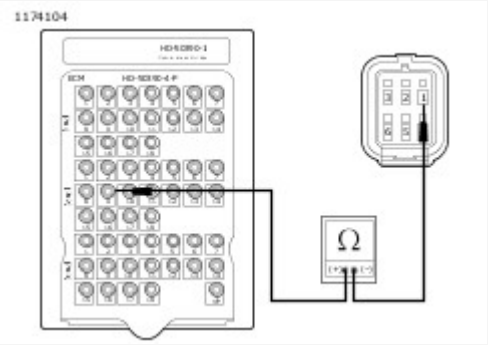

View interactive image

Figure 2.

a. **Yes.** Go to Test 3.
b. **No.** Repair open in (R/W).

3. TGS-1 Ground Wire Resistance Test

1. Test resistance between BOB [78-2] terminal 7 and [204A] terminal 3.
2. Is resistance less than 0.5 ohm?

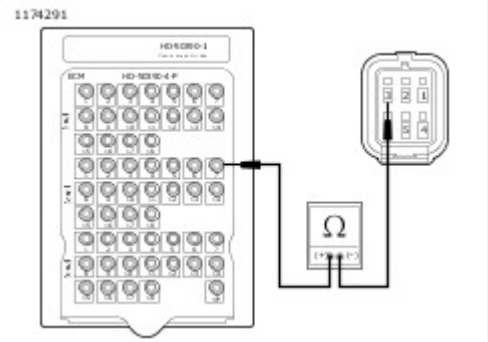

View interactive image

Figure 3.

a. **Yes.** Go to Test 4.
b. **No.** Repair open in (BK/W).

4. TGS-2 Signal Wire Resistance Test

1. Test resistance between BOB [78-3] terminal 14 and [204A] terminal 5.
2. Is resistance less than 0.5 Ohm?

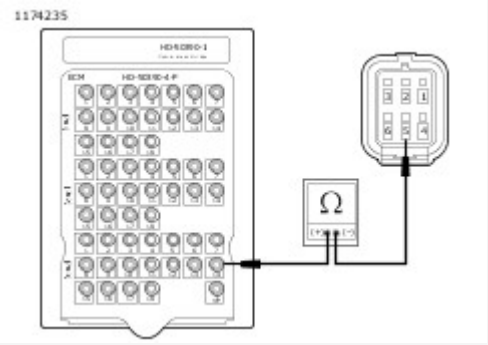

View interactive image

Figure 4.

a. **Yes.** [Go to Test 5.]
b. **No.** Repair open in (GY/W).

5. TGS-2 Power Wire Resistance Test

1. Test resistance between BOB [78-3] terminal 18 and [204A] terminal 4.
2. Is resistance less than 0.5 ohm?

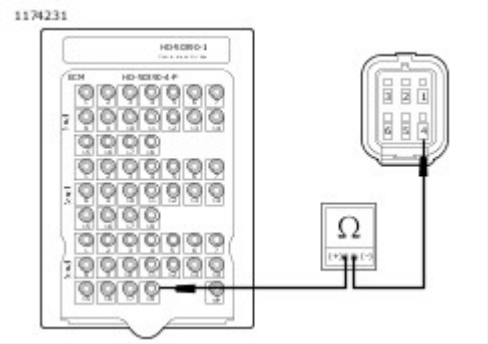

View interactive image

Figure 5.

a. **Yes.** [Go to Test 6.]
b. **No.** Repair open in (R/GY).

6. TGS-2 Ground Wire Resistance Test

1. Test resistance between BOB [78-3] terminal 17 and [204A] terminal 6.
2. Is resistance less than 0.5 ohm?

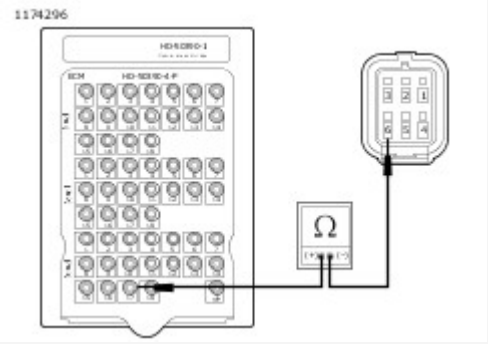

View interactive image

Figure 6.

a. **Yes.** [Go to Test 7.]
b. **No.** Repair open in (BK/GY).

7. Sensor Ground 1 Test

1. Connect [78A-1], [78A-2] and [78A-3] to BOB.
2. Test resistance between BOB [78-2] terminal 7 and ground.
3. Is resistance less than 1 ohm?

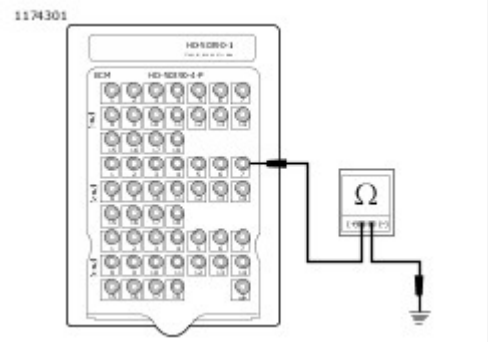

View interactive image

Figure 7.

a. **Yes.** [Go to Test 8.]
b. **No.** Replace ECM.

8. Sensor Ground 2 Test

1. Test resistance between BOB [78-3] terminal 17 and ground.
2. Is resistance less than 1 ohm?

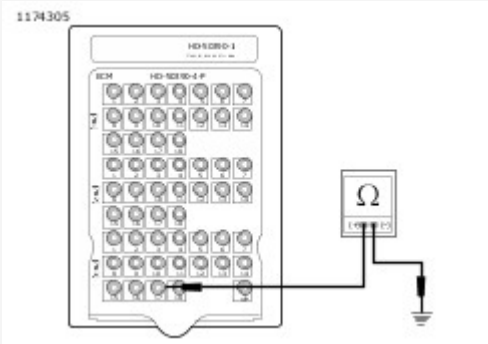

View interactive image

Figure 8.

a. **Yes.** [Go to Test 9.]
b. **No.** Replace ECM.

9. DTC Test

1. Connect [204].
2. Clear DTCs.
3. Turn IGN OFF, wait 1 minute.
4. Start vehicle and operate throttle.
5. Check DTCs.
6. Did DTC return?
    a. **Yes.** Replace TGS.
    b. **No.** Operation normal.

Erratic idle conditions may be caused by:

- Fouled spark plugs.
- Damaged spark plug cables.
- Fuel system problems.
- Ignition system faults.

Diagnostic Tips

WARNING

Wipe up spilled fuel and dispose of rags in a suitable manner. An open spark around gasoline could cause a fire or explosion, resulting in death or serious injury. (00518b)

When performing the steps in the diagnostic tests, use a known good part to verify whether a suspected part is faulty.

Special Tools

Description	Part Number	Qty.
INLINE SPARK TESTER KIT	HD-51724	1

Table 1. Erratic Idle Diagnostic Faults

POSSIBLE CAUSES
Bad fuel
Faulty spark plug cables
Malfunctioning fuel system
Fouled spark plugs

1. Preliminary Engine Tests

1. Verify battery connections are in good condition.
2. Verify fuel in the tank is fresh and not contaminated.
3. Verify spark plug wires are firmly connected to the coil and plugs.
4. Verify heat management system is not operating.
5. Verify fuel injectors are not clogged.
6. Verify battery condition. See **Starting and Charging → BATTERY TESTING**.
7. Does battery pass tests?
    a. **Yes.** **Go to Test 2.**
    b. **No.** Charge or replace battery.

2. Spark Test

1. Connect **INLINE SPARK TESTER KIT (Part Number:HD-51724)** between front spark plug cable and ground. See **Initial Diagnostics → DIAGNOSTIC TOOLS**.
2. Crank engine for a few seconds.
3. Remove tester from front spark plug cable. Connect rear spark plug cable and ground.
4. Did spark jump gap on both cables?
    a. **Yes.** Check for faulty, worn or cracked spark plugs, plug fouling due to mechanical problems or faulty connection at plug or coils. Repair as required.
    b. **No.** **Go to Test 3.**

3. Spark Plug Wire Test

1. Turn IGN OFF.
2. Disconnect spark plug cables.
3. Test resistance of both spark plug cables.
4. Is resistance within specifications? Refer to **Initial Diagnostics → Specifications → Specifications → Spark Plug Cables**.
    a. **Yes.** **Go to Test 4.**
    b. **No.** Replace out of range spark plug cable.

4. Fuel System Test

1. Perform fuel pressure test.
2. Is fuel pressure normal?
    a. **Yes.** If fuel injectors are okay, replace the fuel.
    b. **No.** Repair fuel pressure problem.

See Figure 1. Improper fuel system pressure may contribute to hesitation or loss of power.

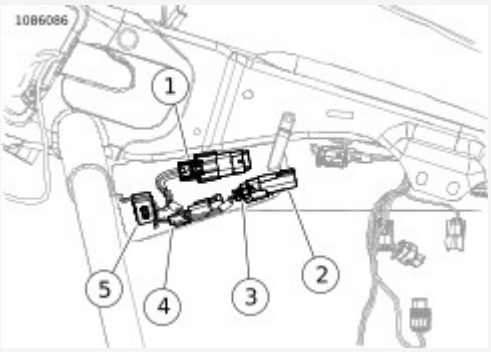

View interactive image

1	USB caddy interconnect [329]
2	USB [264]
3	Fuel pump [141]
4	ET sensor [90]

Figure 1. Under Fuel Tank Left Side

Table 1. Code Description

DTC	DESCRIPTION
P1505	Power limit violation

Special Tools

Description	Part Number	Qty.
DIGITAL TECHNICIAN II	HD-48650	1

Table 1. DTC P1505 Diagnostic Faults

POSSIBLE CAUSES
Intake leak
Throttle plate damage

1. DTC Validation Test

1. Verify no other engine sensor DTCs are present.
2. Are any other DTCs present?
    a. **Yes.** Diagnose other DTCs first.
    b. **No.** Go to Test 2.

2. Vacuum Leak Test

1. Start engine.
2. Check for vacuum leaks.
3. Were any leaks found?
    a. **Yes.** Repair vacuum leak.
    b. **No.** Go to Test 3.

3. Throttle Plate Test

1. Inspect throttle plate.
2. Has the throttle plate been modified or damaged?
    a. **Yes.** Repair or replace throttle plate.
    b. **No.** Go to Test 4.

4. DTC Confirmation Test

1. Clear DTCs.
2. Using DIGITAL TECHNICIAN II (Part Number:HD-48650), attempt to calibrate the ECM using the module replace feature found in vehicle set up.
3. Did DTC return?
    a. **Yes.** Replace ECM.
    b. **No.** Repair complete.

Special Tools

Description	Part Number	Qty.
INLINE SPARK TESTER KIT	HD-51724	1

Table 1. Hesitation or Loss of Power Test Diagnostic Faults

POSSIBLE CAUSES
Loss of engine compression
Fuel system issues
Battery condition and connections
Spark plug condition
Air filter condition
Poor chassis ground connections
Performance modifications
Electrical modifications
Throttle valve malfunction

1. Preliminary Engine Tests

1. Verify battery connections are in good condition.
2. Verify fuel in the tank is fresh and not contaminated.
3. Verify spark plug wires are firmly connected the coil and plugs.
4. Verify fuel injectors are not clogged.
5. Verify battery condition. See **Starting and Charging → BATTERY TESTING**.
6. Does battery pass tests?
    a. **Yes.** **Go to Test 2.**
    b. **No.** Charge or replace battery.

2. Vacuum Leak Test

1. Start engine. Check for vacuum leaks.
2. Were any leaks found?
    a. **Yes.** Repair vacuum leak.
    b. **No.** **Go to Test 3.**

3. Spark Present Test

1. Check spark plug condition and replace if fouled.

2. Using **INLINE SPARK TESTER KIT (Part Number:HD-51724)**, check spark at both plugs while cranking engine.
3. Is spark present?
    a. **Yes.** Go to Test 4.
    b. **No.** The spark plugs will not spark if there is low or no compression. If spark is not present, test compression before troubleshooting ignition circuit. Once good compression is confirmed, check condition of ignition coils, coil primary wiring and spark plug boots. See **Engine Management → CKP SENSOR DIAGNOSTICS**.

4. Compression Test

1. Perform compression test.
2. Does engine pass compression test?
    a. **Yes.** Go to Test 5.
    b. **No.** Repair engine loss of compression.

5. Fuel System Test

1. Perform fuel pressure test.
2. Does fuel pressure meet specification?
    a. **Yes.** Inspect and clean throttle body and repair as needed.
    b. **No.** Inspect fuel inlet sock and fuel filter for obstruction. Inspect internal fuel hose for leaks. If no issues are found, replace fuel pump assembly.

Special Tools

Description	Part Number	Qty.
DIGITAL TECHNICIAN II	HD-48650	1

The ABS module consists of an electro-hydraulic control unit (EHCU) which controls brake application under extreme stopping conditions. The ABS only activates when wheel slip is detected.

The ABS includes the:

- See **Figure 1**. The EHCU.
- See **Figure 2**. Front WSS.
- See **Figure 1**. Rear WSS.

The EHCU responds to WSS inputs. When the EHCU is activated, the solenoid valves decrease, hold or increase hydraulic fluid pressure to control the individual calipers of each wheel to prevent wheel slipping. However, the EHCU cannot increase hydraulic pressure beyond the pressure or force being applied to the brake pedal or lever by the rider.

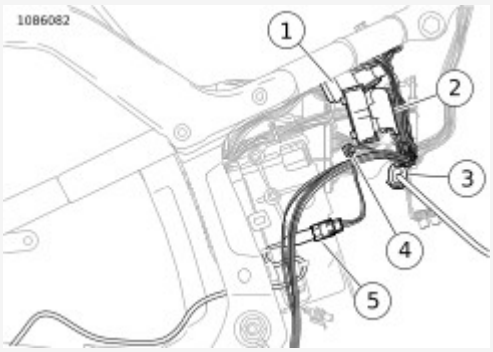

View interactive image

1	Engine harness [145]
2	ABS EHCU [166]
3	Rear HO2S [137]
4	Starter solenoid [128]
5	Rear WSS [168]

Figure 1. Behind Right Side Cover

ABS CAN Communication Functionality

The RHCM has a front brake switch that supplies a signal on the CAN bus. This CAN communication signal is sent to the EHCU to indicate that the front brake is applied. The rear brake switch supplies a ground input to the BCM. The BCM sends a rear brake applied CAN communication signal to the EHCU.

During normal ABS operation:

- A series of rapid solenoid valve pulsations may be felt in either the front brake lever or rear brake pedal but only during

initialization and anti-lock braking.

- A ticking or popping noise may be heard as the solenoid valves cycle rapidly.
- During anti-lock braking on dry pavement, intermittent chirping noises may be heard as the tires approach slipping.

When the EHCU is replaced, use **DIGITAL TECHNICIAN II (Part Number:HD-48650)** to program and bleed the EHCU.

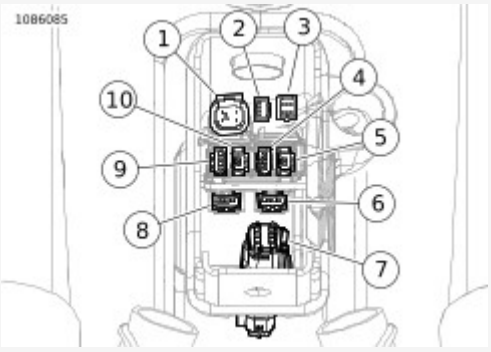

View interactive image

1	Headlamp [38]
2	Console [20]
3	TGS [204]
4	Right front lighting [31R]
5	Front WSS [167]
6	Left front lighting [31L]
7	USB caddy interconnect [329]
8	LHCM [24]
9	RHCM [22-1]
10	RHCM [22-2]

Figure 2. USB Caddy

Pressure Hold

The EHCU controls the release and apply valves. This holds the same constant pressure on the appropriate caliper. The EHCU will release the pressure hold in the event of wheel slip.

Pressure Decrease

Sometimes the pressure being applied to the caliper is high enough for the EHCU to detect wheel slip. To control the wheel slip, the EHCU closes the apply valve and opens the release valve. This releases pressure on the appropriate caliper until wheel slip is no longer detected. The excess fluid is stored in the accumulator until the pump can return the fluid to the master cylinder or fluid reservoir.

Pressure Increase

After the wheel slip is corrected during an ABS event, a pressure increase occurs. The EHCU closes the release valve and opens the apply valve. This increases the pressure applied to the caliper during deceleration in order to reduce the speed of the wheel. The increased pressure will not exceed the pressure being applied to the master cylinder by the rider.

Initialization Self-Test

The ABS module performs one initialization test each ignition cycle. As part of the initialization self-test, the ABS module energizes the actuators and commands the motor and solenoids on and off. The ABS ECU will run this test the first time the vehicle speed exceeds 4.8 km/h (3 mph) in an ignition cycle.

ABS Indicator

See Figure 3 and Figure 4. The IM illuminates the ABS indicator if:

- The EHCU detects an ABS disabling malfunction. The EHCU sends a message to the IM requesting illumination.
- The IM performs a lamp check.
- The IM detects a loss of communication with the EHCU.
- The ABS indicator may flash when the IGN is turned on. This will continue until the vehicle is driven to verify WSS operation.

The EHCU sends a message to the instrument when a malfunction that disables ABS operation is detected. Depending on the fault, the ABS indicator may stay on even after the malfunction is corrected. The indicator will not go off until the vehicle is operated at speeds greater than 4.8 km/h (3 mph). It is important to verify that this is not the cause of an ABS indicator illumination when no DTCs are set, before attempting to diagnose other possible causes.

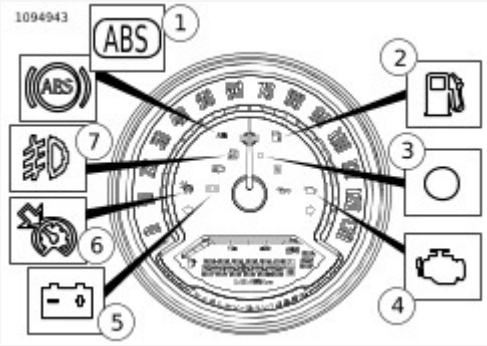

View interactive image

1	ABS (km/h ABS icon lamp also shown)
2	Low fuel
3	Security
4	Check engine
5	Battery
6	Cruise enabled
7	Aux lighting

Figure 3. Indicator Lamps (Except FXBB, FXBR)

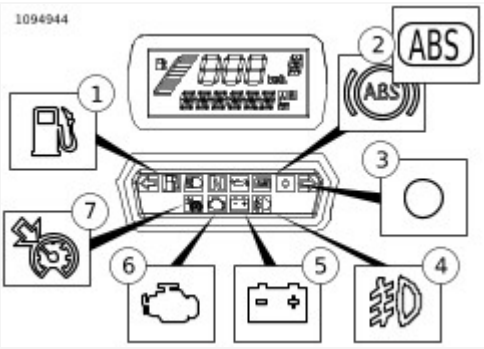

View interactive image

1	Low fuel
2	ABS (km/h ABS icon lamp also shown)
3	Security
4	Aux lighting
5	Battery
6	Check engine
7	Cruise enabled

Figure 4. Indicator Lamps (FXBB, FXBR)

See Figure 1. The EHCU is replaced as a unit. It contains the pump, valves and solenoids along with all the controlling circuitry.

The ABS module monitors the voltage level available for system operation. A low voltage condition prevents the system from operating properly. The ABS module also performs several self-tests for internal problems.

Table 1. Code Description

DTC	DESCRIPTION
C1014	ABS ECU relay error
C1040	ABS pump/motor error
C1055	ABS ECU internal error
C1061	ABS front apply solenoid circuit open/high resistance
C1062	ABS front release solenoid circuit open/high resistance
C1065	ABS rear apply solenoid circuit open/high resistance
C1066	ABS rear release solenoid circuit open/high resistance

Conditions for Setting the DTC

These DTCs will set if one of the following conditions exists in the EHCU:

- Low battery voltage.
- High resistance in the ABS power or ground circuits.
- EHCU malfunction.

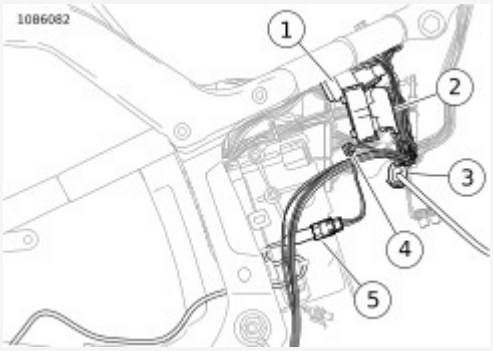

View interactive image

1	Engine harness [145]
2	ABS EHCU [166]
3	Rear HO2S [137]
4	Starter solenoid [128]
5	Rear WSS [168]

Figure 1. Behind Right Side Cover

Action Taken When the DTC Sets

- ABS is disabled.
- The ABS indicator is illuminated.

Diagnostic Tips

If improper voltage is supplied to the EHCU, these codes may set. Using an improper or high voltage charger may cause these codes to inadvertently set when there is nothing wrong with the ABS system.

Connector Information

For additional information about the connectors in the following diagram(s) and diagnostic procedure(s), see [Wiring → Wire Harness Connectors → Connector Locations](#).

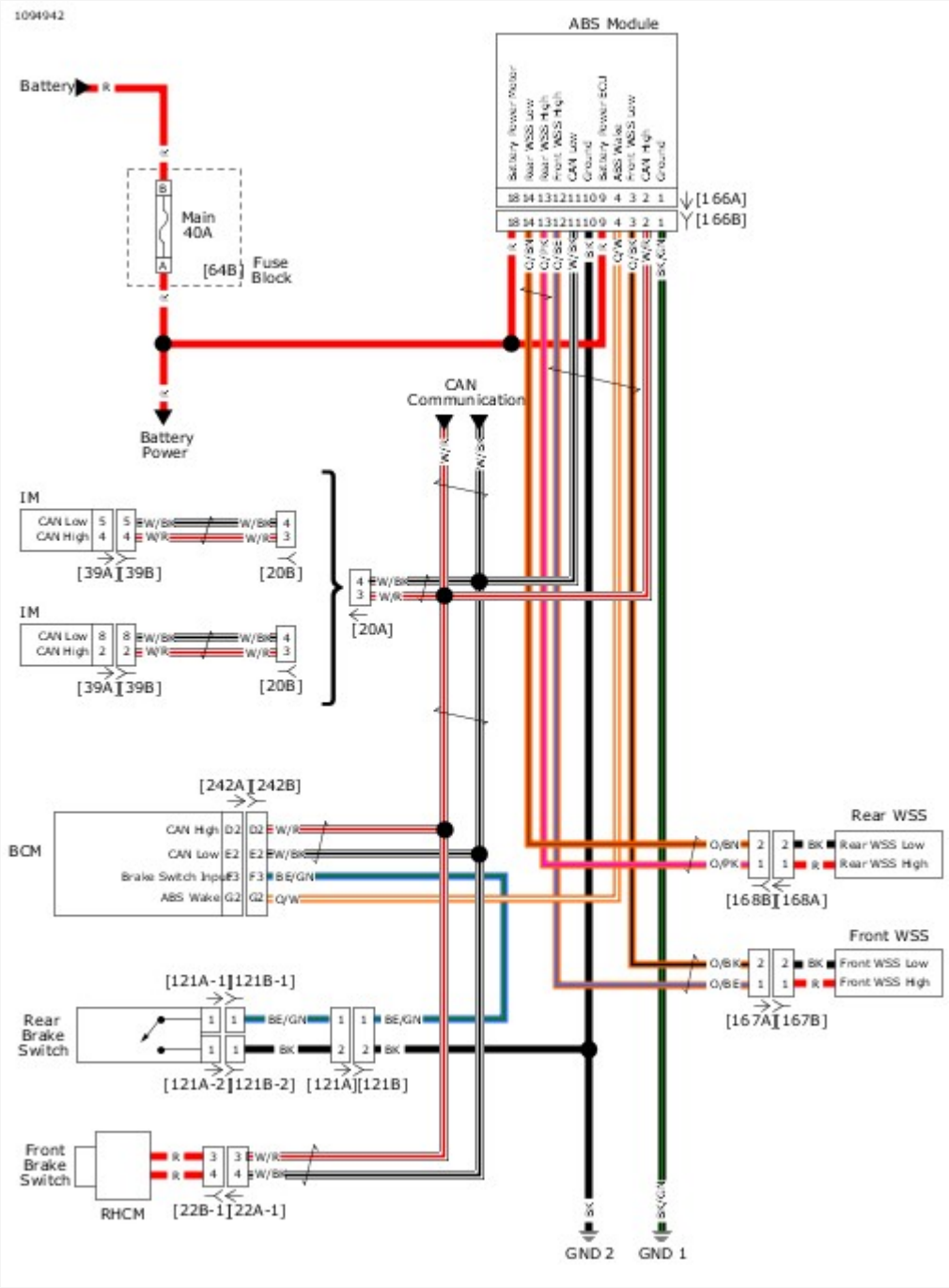

View interactive image

Figure 2. ABS Schematic

Special Tools

Description	Part Number	Qty.
TEST CONNECTOR KIT	HD-41404	1
BREAKOUT BOX	HD-50390-1	1
ABS OVERLAY	HD-50390-1-P1	1
ABS CABLE	HD-50390-6	1

Table 1. DTC C1014, C1040, C1055, C1061, C1062, C1065, C1066 Diagnostic Faults

POSSIBLE CAUSES
High resistance in the ABS power or ground circuits
Low battery voltage

1. Battery Voltage Test

1. Turn IGN OFF.
2. Verify battery terminals are properly connected, tightened and clean.
3. Connect **BREAKOUT BOX (Part Number:HD-50390-1)** and **ABS CABLE (Part Number:HD-50390-6)** to wiring harness [166B], leaving EHCU [166A] disconnected. See **Initial Diagnostics → DIAGNOSTIC TOOLS**.
4. Verify **ABS OVERLAY (Part Number:HD-50390-1-P1)** is in position on BOB.
5. Turn IGN ON.
6. Using **TEST CONNECTOR KIT (Part Number:HD-41404)**, test voltage between BOB terminal 9 and ground.
7. Test voltage between BOB terminal 18 and ground.
8. Is voltage between 10.5-16.0V on both circuits?

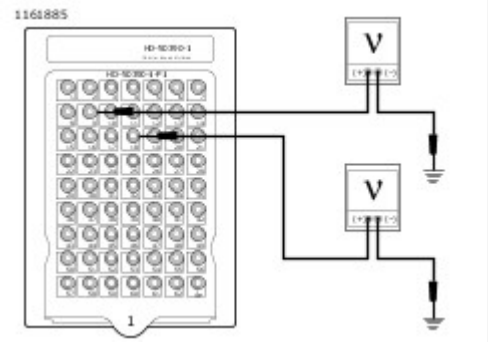

View interactive image

Figure 1.

a. **Yes.** **Go to Test 2.**
b. **No.** **Go to Test 4.**

2. Ground Circuit Resistance Test

1. Turn IGN OFF.
2. Test resistance between BOB terminal 1 and ground.
3. Test resistance between BOB terminal 10 and ground.
4. Is resistance less than 0.5 ohms on both circuits?

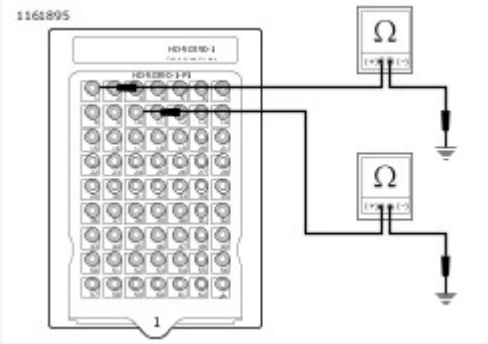

View interactive image

Figure 2.

a. **Yes.** Go to Test 3.
b. **No.** Repair high resistance or open condition on ground circuit.

3. ABS ECU DTC Test

1. Clear DTCs.
2. Turn IGN ON.
3. Check DTCs.
4. Do any of the following DTCs reset: C1014, C1040, C1055, C1061, C1062, C1065, C1066?
   a. **Yes.** Replace EHCU.
   b. **No.** System working properly.

4. Battery Power Open Test

1. Turn IGN OFF.
2. Remove main fuse [64].
3. Test resistance between BOB terminal 9 and [64B] socket terminal A (R) wire.
4. Test resistance between BOB terminal 18 and [64B] socket terminal A (R) wire.
5. Is resistance less than 0.5 ohms on both circuits?

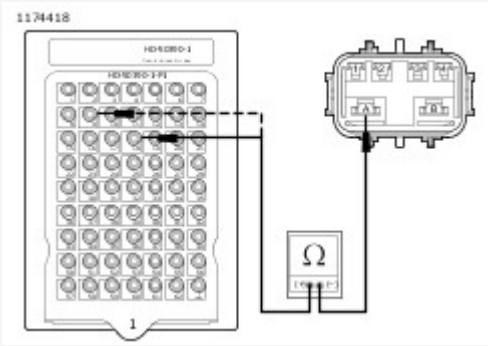

View interactive image

Figure 3.

a. **Yes.** Inspect battery and charging system. See **Starting and Charging → CHARGING SYSTEM**.
b. **No.** Repair open in (R) wire.

See Figure 1 and Figure 2. The active WSS is supplied system voltage from the EHCU. The sensor returns a 7mA or 14mA signal back to the EHCU.

- **Front WSS high circuit:** The EHCU monitors ignition voltage from terminal 12 of the EHCU through terminal 1 of the front WSS.
- **Front WSS low circuit:** The EHCU monitors the signal from terminal 2 of the front WSS through terminal 3 of the ABS ECU.
- **Rear WSS high circuit:** The EHCU monitors ignition voltage from terminal 13 of the EHCU through terminal 1 of the rear WSS.
- **Rear WSS low circuit:** The EHCU monitors the frequency signal from terminal 2 of the rear WSS through terminal 14 of the EHCU.

Table 1. Code Description

DTC	DESCRIPTION
C1021	ABS front WSS always zero
C1023	ABS rear WSS always zero
C1025	ABS front wheel speed intermittent
C1027	ABS rear wheel speed intermittent
C1029	ABS wheel speed difference too high
C1032	ABS front wheel speed circuit open/shorted
C1034	ABS rear wheel speed circuit open/shorted

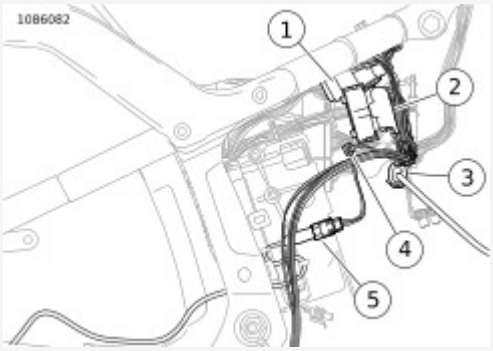

View interactive image

1	Engine harness [145]
2	ABS EHCU [166]
3	Rear HO2S [137]
4	Starter solenoid [128]
5	Rear WSS [168]

Figure 1. Behind Right Side Cover

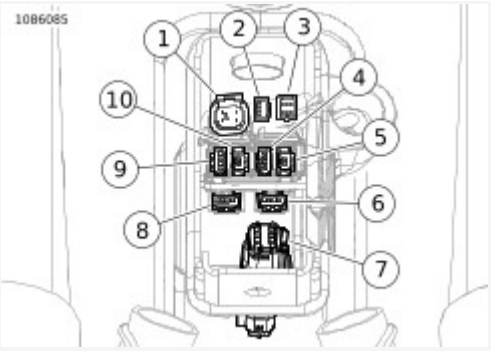

View interactive image

1	Headlamp [38]
2	Console [20]
3	TGS [204]
4	Right front lighting [31R]
5	Front WSS [167]
6	Left front lighting [31L]
7	USB caddy interconnect [329]
8	LHCM [24]
9	RHCM [22-1]
10	RHCM [22-2]

Figure 2. USB Caddy

Conditions for Setting the DTC

DTC C1021, C1023, C1025, C1027 or C1029 can set if the following conditions exist in the WSS circuit:

- Interference on the WSS circuit.
- Dynamometer testing.
- WSS malfunction.
- ABS ECU malfunction.
- Incorrect or worn bearing assembly.
- Mismatched or improperly sized tires.
- Worn suspension components.
- Riding over rough terrain.
- External or internal wheel speed circuit intermittent open.
- Electrical noise on the WSS wires.

DTC C1032 can set if one of the following conditions exist in the front high or low WSS circuit:

- Short to ground, short to battery, open or high resistance in the front high or low WSS circuits.
- WSS malfunction.
- ABS ECU malfunction.

DTC C1034 can set if one of the following conditions exist in the rear high or low WSS circuit:

- Short to ground, short to battery, open or high resistance in the rear high or low WSS circuits.
- WSS malfunction.
- ABS ECU malfunction.

Action Taken When the DTC Sets

- ABS is disabled.
- The ABS indicator is illuminated.

Diagnostic Tips

All the DTCs that set in this diagnostic are related to terminals 1 and 2 of the WSS, either internally in the EHCU or WSS, or externally in the wire or connectors. If a DTC is intermittent, it may be a connection problem from terminal 1 or 2 of the WSS to the harness wiring.

Check for these issues prior to part replacement:

- A correctly installed ABS wheel bearing will have a gray seal facing outward.
- If the red seal is showing, the bearing is installed backward.
- If the wheel bearing has a metallic shield, it is a non-ABS bearing and should be replaced with the correct bearing.
- Open in WSS circuit.
- WSS circuit short to voltage.
- Short to ground in WSS circuit.
- Short between WSS circuits.
- External or internal wheel speed circuit intermittent open.
- ABS module malfunction.

Connector Information

For additional information about the connectors in the following diagram(s) and diagnostic procedure(s), see [Wiring → Wire Harness Connectors → Connector Locations](#).

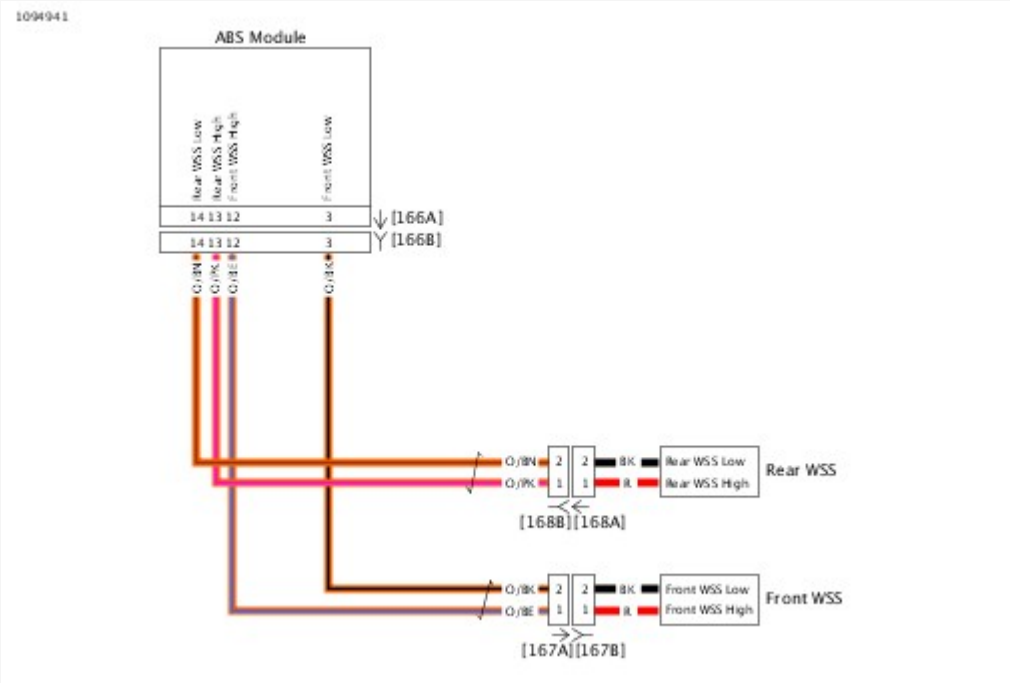

View interactive image

Figure 3. Wheel Speed Sensor Circuits

Special Tools

Description	Part Number	Qty.
TEST CONNECTOR KIT	HD-41404	1
BREAKOUT BOX	HD-50390-1	1
ABS OVERLAY	HD-50390-1-P1	1
ABS CABLE	HD-50390-6	1

Table 1. DTC C1021, C1023, C1025, C1027, C1029 Diagnostic Faults

POSSIBLE CAUSES
Electrical interference
Poor connections
WSS malfunction
Worn bearing assembly

1. Electrical Interference Test

1. Inspect vehicle for accessories that may cause electrical interference with the wheel speed sensors.
2. Electrical interference present?
    a. **Yes.** Remove or relocate interference.
    b. **No.** Go to Test 2.

2. Validation of Current DTC Test

1. Clear DTC.
2. Operate vehicle above 5 km/h (3 mph) for at least 90 seconds.
3. Check DTCs.
4. Did DTC reset?
    a. **Yes.** Go to Test 3.
    b. **No.** See diagnostic tips.

3. Worn or Damaged Components Test

1. Inspect for worn, damaged or incorrect bearing assembly.

NOTE

A correctly installed ABS wheel bearing will have a gray seal facing outward.

- If the seal is red, the bearing is installed backward.
- If the wheel bearing has a metallic shield, it is a non-ABS bearing and should be replaced with the correct bearing.

2. Were worn, damaged or incorrect components found?
    a. **Yes.** Repair as needed.
    b. **No.** Go to Test 4.

4. Front Short to Voltage Test

1. Turn IGN OFF.
2. Disconnect front WSS [167].
3. Connect BREAKOUT BOX (Part Number:HD-50390-1) and ABS CABLE (Part Number:HD-50390-6) to wiring harness [166B], leaving EHCU [166A] disconnected. See Initial Diagnostics → DIAGNOSTIC TOOLS.
4. Verify ABS OVERLAY (Part Number:HD-50390-1-P1) is in position on BOB.
5. Turn IGN ON.
6. Using TEST CONNECTOR KIT (Part Number:HD-41404), test voltage between BOB terminal 12 and ground.
7. Is voltage greater than 1.0V?

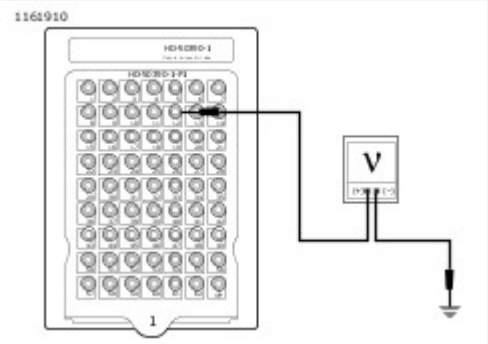

View interactive image

Figure 1.

    a. **Yes.** Repair short to voltage on (O/BE) wire.
    b. **No.** Go to Test 5.

5. Rear Short to Voltage Test

1. Turn IGN OFF.
2. Disconnect rear WSS [168].
3. Turn IGN ON.
4. Test voltage between BOB terminal 13 and ground.
5. Is voltage greater than 1.0V?

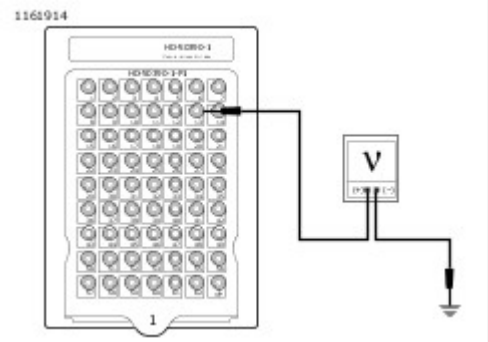

View interactive image

View interactive image

Figure 2.

a. **Yes.** Repair short to voltage on (O/PK) wire.
b. **No.** Go to Test 6.

6. Circuit Test

1. Inspect WSS connector for proper fit and damage.
2. Is WSS connector secure and in good condition?
   a. **Yes.** Replace with appropriate bearing assembly and WSS and retest. If code comes back during retest replace ABS module.
   b. **No.** Repair or replace WSS connector.

Special Tools

Description	Part Number	Qty.
TEST CONNECTOR KIT	HD-41404	1
WHEEL SPEED SENSOR TEST LEAD	HD-50341	1
BREAKOUT BOX	HD-50390-1	1
ABS OVERLAY	HD-50390-1-P1	1
ABS CABLE	HD-50390-6	1

Table 1. DTC C1032 Diagnostic Faults

POSSIBLE CAUSES
WSS malfunction
Intermittent open in the front high or low WSS circuits
Short to ground, short to battery, open or high resistance in the front WSS circuits

1. Electrical Interference Test

1. Inspect vehicle for accessories that may cause electrical interference with the WSS.
2. Inspect front wheel bearing.
3. Is electrical interference or wheel bearing malfunction present?
    a. **Yes.** Remove or relocate interference or correct wheel bearing issues.
    b. **No.** Go to Test 2.

2. Loose or Damaged Connections Test

1. Turn IGN OFF.
2. Inspect for loose or damaged connections on front WSS circuits.
3. Were poor connections found?
    a. **Yes.** Repair connections and circuits.
    b. **No.** Go to Test 3.

3. Front WSS Test

1. Turn IGN OFF.
2. Disconnect front WSS [167].
3. Connect **WHEEL SPEED SENSOR TEST LEAD (Part Number:HD-50341)** between [167A] terminals 1 and 2. See **Initial Diagnostics → DIAGNOSTIC TOOLS**.
4. Clear DTCs.
5. Cycle IGN OFF, ON, wait 10 seconds for ABS to complete initialization test.
6. Check DTCs.

7. Did DTC reset?
    a. **Yes.** Go to Test 4.
    b. **No.** Replace front WSS.

4. (O/BK) Open Test

1. Turn IGN OFF.
2. Connect BREAKOUT BOX (Part Number:HD-50390-1) and ABS CABLE (Part Number:HD-50390-6) between wire harness [166B], leaving ABS module [166A] disconnected. See Initial Diagnostics → DIAGNOSTIC TOOLS.
3. Verify ABS OVERLAY (Part Number:HD-50390-1-P1) is in position on BOB.
4. Remove sensor test lead.
5. Using TEST CONNECTOR KIT (Part Number:HD-41404), test resistance between BOB terminal 3 and [167A] terminal 2 (O/BK) wire.
6. Is resistance less than 0.5 ohm?

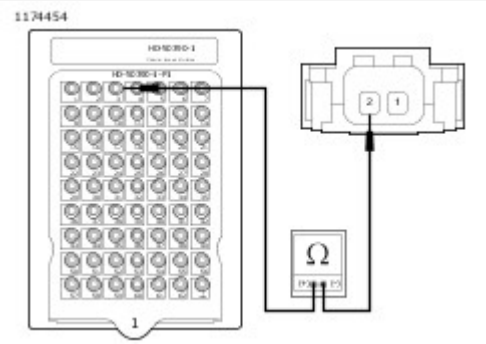

View interactive image

Figure 1.
    a. **Yes.** Go to Test 5.
    b. **No.** Repair open in (O/BK) wire.

5. (O/BE) Open Test

1. Test resistance between BOB terminal 12 and [167A] terminal 1 (O/BE) wire.
2. Is resistance less than 0.5 ohm?

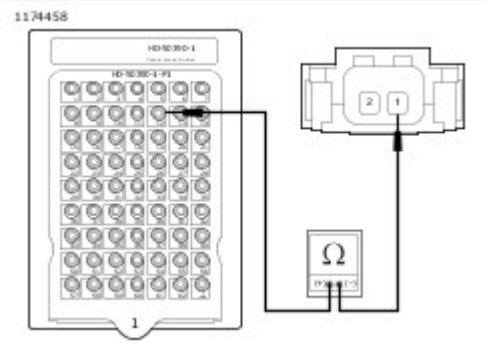

View interactive image

Figure 2.
    a. **Yes.** Go to Test 6.

b. **No.** Repair open in (O/BE) wire.

6. Shorted Wires Test

1. Test continuity between BOB terminals 3 and 12.
2. Is continuity present?

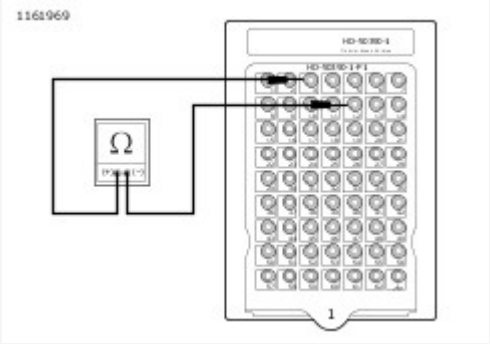

View interactive image

Figure 3.

a. **Yes.** Repair short between (O/BE) and (O/BK) wires.
b. **No.** Go to Test 7.

7. (O/BK) Ground Test

1. Test continuity between BOB terminal 3 and ground.
2. Is continuity present?

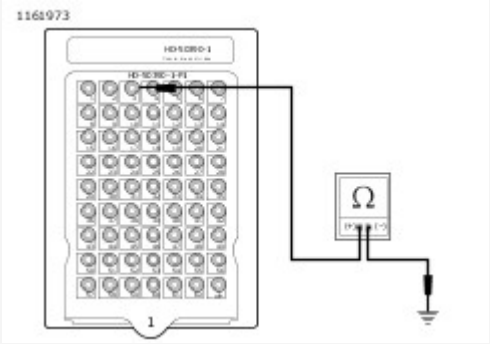

View interactive image

Figure 4.

a. **Yes.** Repair short to ground on (O/BK) wire.
b. **No.** Go to Test 8.

8. (O/BE) Ground Test

1. Test continuity between BOB terminal 12 and ground.
2. Is continuity present?

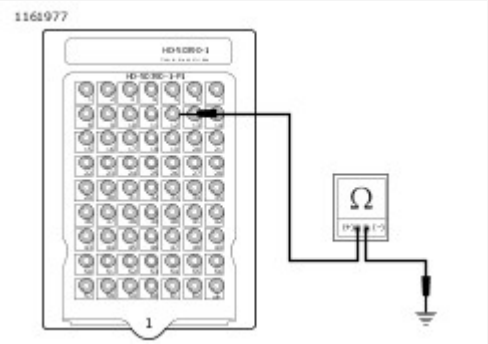

View interactive image

Figure 5.

a. **Yes.** Repair short to ground on (O/BE) wire.
b. **No.** [Go to Test 9.]

9. (O/BK) Voltage Test

1. Turn IGN ON.
2. Test voltage between BOB terminal 3 and ground.
3. Is voltage present?

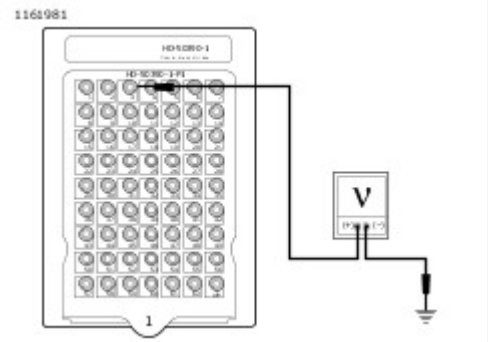

View interactive image

Figure 6.

a. **Yes.** Repair short to voltage on (O/BK) wire.
b. **No.** Replace ABS module.

Special Tools

Description	Part Number	Qty.
TEST CONNECTOR KIT	HD-41404	1
WHEEL SPEED SENSOR TEST LEAD	HD-50341	1
BREAKOUT BOX	HD-50390-1	1
ABS OVERLAY	HD-50390-1-P1	1
ABS CABLE	HD-50390-6	1

Table 1. DTC C1034 Diagnostic Faults

POSSIBLE CAUSES
WSS malfunction
Intermittent open in the rear high or low WSS circuits
Short to ground, short to battery, open or high resistance in the rear WSS circuits

1. Electrical Interference Test

1. Inspect vehicle for accessories that may cause electrical interference with the WSS.
2. Inspect rear wheel bearing.
3. Is electrical interference or wheel bearing malfunction present?
    a. **Yes.** Remove or relocate interference or correct wheel bearing issues.
    b. **No.** Go to Test 2.

2. Loose or Damaged Connections Test

1. Inspect for loose or damaged connections on rear WSS circuits.
2. Were poor connections found?
    a. **Yes.** Repair connections and circuits.
    b. **No.** Go to Test 3.

3. Rear WSS Test

1. Turn IGN OFF.
2. Disconnect rear WSS [168].
3. Connect **WHEEL SPEED SENSOR TEST LEAD (Part Number:HD-50341)** between [168B] terminals 1 and 2. See **Initial Diagnostics → DIAGNOSTIC TOOLS**.
4. Clear DTCs.
5. Cycle IGN OFF, ON, wait 10 seconds for ABS to complete initialization test.
6. Check DTCs.
7. Did DTC reset?

a. **Yes.** Go to Test 4.
b. **No.** Replace rear WSS.

4. (O/BN) Open Test

1. Turn IGN OFF.
2. Connect BREAKOUT BOX (Part Number:HD-50390-1) and ABS CABLE (Part Number:HD-50390-6) between wire harness [166B], leaving ABS module [166A] disconnected. See Initial Diagnostics → DIAGNOSTIC TOOLS.
3. Verify ABS OVERLAY (Part Number:HD-50390-1-P1) is in position on BOB.
4. Remove sensor test lead.
5. Using TEST CONNECTOR KIT (Part Number:HD-41404), test resistance between BOB terminal 14 and [168B] terminal 2 (O/BN) wire.
6. Is resistance less than 0.5 ohm?

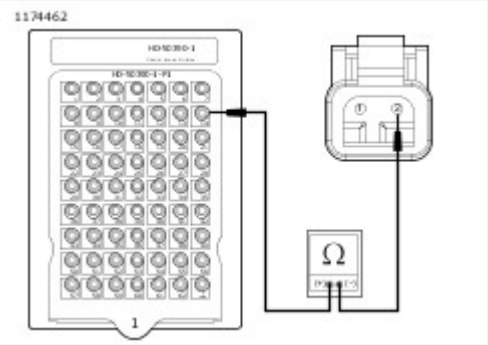

View interactive image

Figure 1.

a. **Yes.** Go to Test 5.
b. **No.** Repair open in (O/BN) wire.

5. (O/PK) Open Test

1. Test resistance between BOB terminal 13 and [168B] terminal 1 (O/PK) wire.
2. Is resistance less than 0.5 ohm?

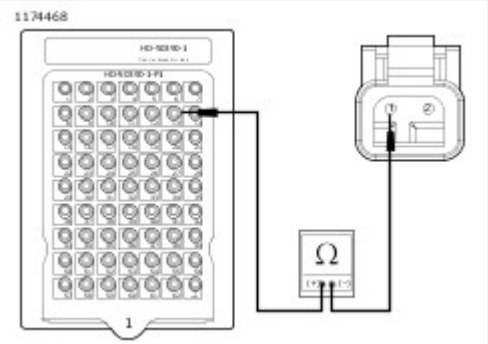

View interactive image

Figure 2.

a. **Yes.** Go to Test 6.
b. **No.** Repair open in (O/PK) wire.

6. Shorted Wires Test

1. Test continuity between BOB terminals 14 and 13.
2. Is continuity present?

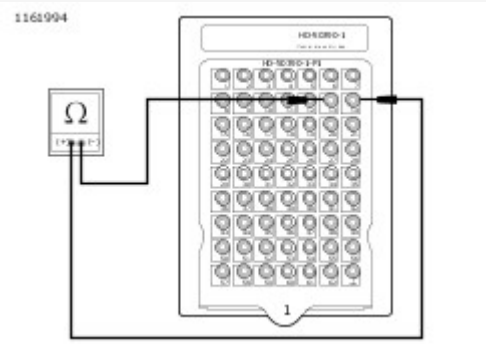

View interactive image

Figure 3.

a. **Yes.** Repair short between (O/BN) and (O/PK) wires.
b. **No.** Go to Test 7.

7. (O/BN) Ground Test

1. Test continuity between BOB terminal 14 and ground.
2. Is continuity present?

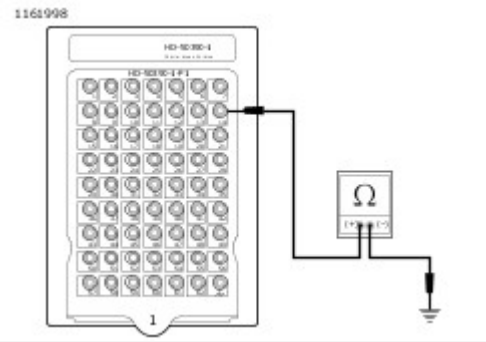

View interactive image

Figure 4.

a. **Yes.** Repair short to ground on (O/BN) wire.
b. **No.** Go to Test 8.

8. (O/PK) Ground Test

1. Test continuity between BOB terminal 13 and ground.
2. Is continuity present?

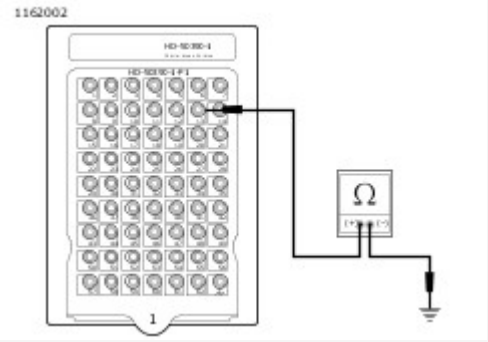

View interactive image

Figure 5.

a. **Yes.** Repair short to ground on (O/PK) wire.
b. **No.** Go to Test 9.

9. (O/BN) Voltage Test

1. Turn IGN ON.
2. Test voltage between BOB terminal 14 and ground.
3. Is voltage present?

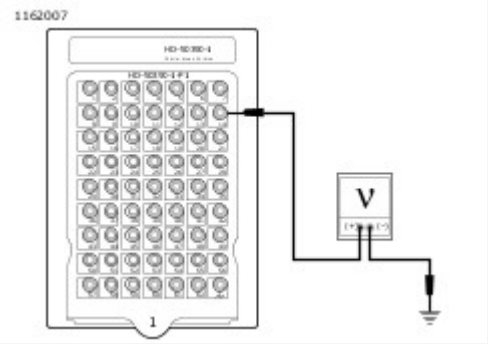

View interactive image

Figure 6.

a. **Yes.** Repair short to voltage on (O/BN) wire.
b. **No.** Replace ABS module.

Special Tools

Description	Part Number	Qty.
DIGITAL TECHNICIAN II	HD-48650	1

The EHCU is calibrated to maximize ABS performance. If the correct calibration is not in the module the ABS may not perform correctly. The ECM and ABS modules also compare VINs to verify the correct ABS module is installed. These VINs must match before the ABS will operate properly.

Table 1. Code Description

DTC	DESCRIPTION
C1159	ABS invalid stored VIN
C1178	ABS no VIN received from ECM
C1184	ABS invalid VIN from ECM

Conditions for Setting the DTC

The ABS module determines final calibration is not completed or that the VIN does not match calibration.

Action Taken When the DTC Sets

- ABS is disabled.
- The ABS indicator is illuminated.

Diagnostic Tips

These codes will usually appear after replacing the ECM or the EHCU. The **new** modules must be programmed using DIGITAL TECHNICIAN II (Part Number:HD-48650). After the parts are programmed and matched correctly for the specific vehicle, clear the codes.

Special Tools

Description	Part Number	Qty.
DIGITAL TECHNICIAN II	HD-48650	1

Table 1. DTC C1159, C1178, C1184 Diagnostic Faults

POSSIBLE CAUSES
An EHCU that is not calibrated correctly or has an internal fault
ECM VIN does not match ABS

1. Validation of Current DTC Test

1. Clear DTC.
2. Start engine, wait 10 seconds for ABS to complete initialization test.
3. Turn engine off.

NOTE

If more than one DTC resets, make sure to diagnose the DTC with the higher priority first. Refer to **Initial Diagnostics → Initial Diagnostics → Diagnostics**.

4. Check DTCs.
5. Did DTC reset?
    a. **Yes.** **Go to Test 2.**
    b. **No.** See diagnostic tips.

2. Successful Calibration Test

1. Using **DIGITAL TECHNICIAN II (Part Number:HD-48650)**, attempt to calibrate the EHCU using the reflash icon and selecting ABS.
2. Clear DTCs.
3. Turn IGN ON.
4. Check DTCs.
5. Did DTC reset?
    a. **Yes.** **Go to Test 3.**
    b. **No.** Calibration complete.

3. IM Test

1. Cycle IGN OFF and ON.
2. Does IM display "VINERR"?
    a. **Yes.** Replace ECM.
    b. **No.** Replace EHCU.

See Figure 1 and Figure 2. The IM illuminates the ABS indicator by supplying ground to the lamp. The ABS module sends a message on the CAN bus to the IM in order to command the indicator ON or OFF.

The ABS indicator will normally come on and then begin to flash when the vehicle is turned ON. It will continue to flash until the EHCU sees at least 4.8 km/h (3 mph) from both WSS to verify proper operation.

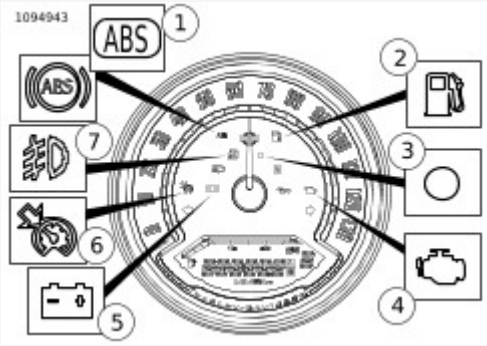

View interactive image

1	ABS (km/h ABS icon lamp also shown)
2	Low fuel
3	Security
4	Check engine
5	Battery
6	Cruise enabled
7	Aux lighting

Figure 1. Indicator Lamps (Except FXBB, FXBR)

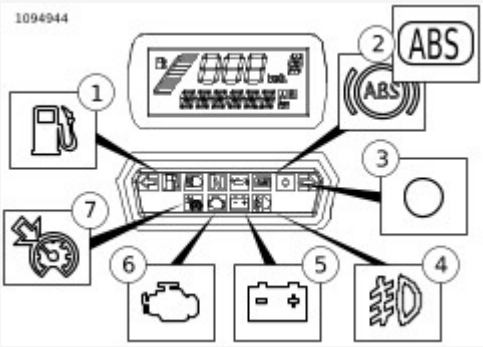

View interactive image

1	Low fuel
2	ABS (km/h ABS icon lamp also shown)
3	Security

4	Aux lighting
5	Battery
6	Check engine
7	Cruise enabled

Figure 2. Indicator Lamps (FXBB, FXBR)

Diagnostic Tips

The malfunction must be present during diagnosis in order to prevent unnecessary parts replacement.

Connector Information

For additional information about the connectors in the following diagram(s) and diagnostic procedure(s), see **Wiring → Wire Harness Connectors → Connector Locations**.

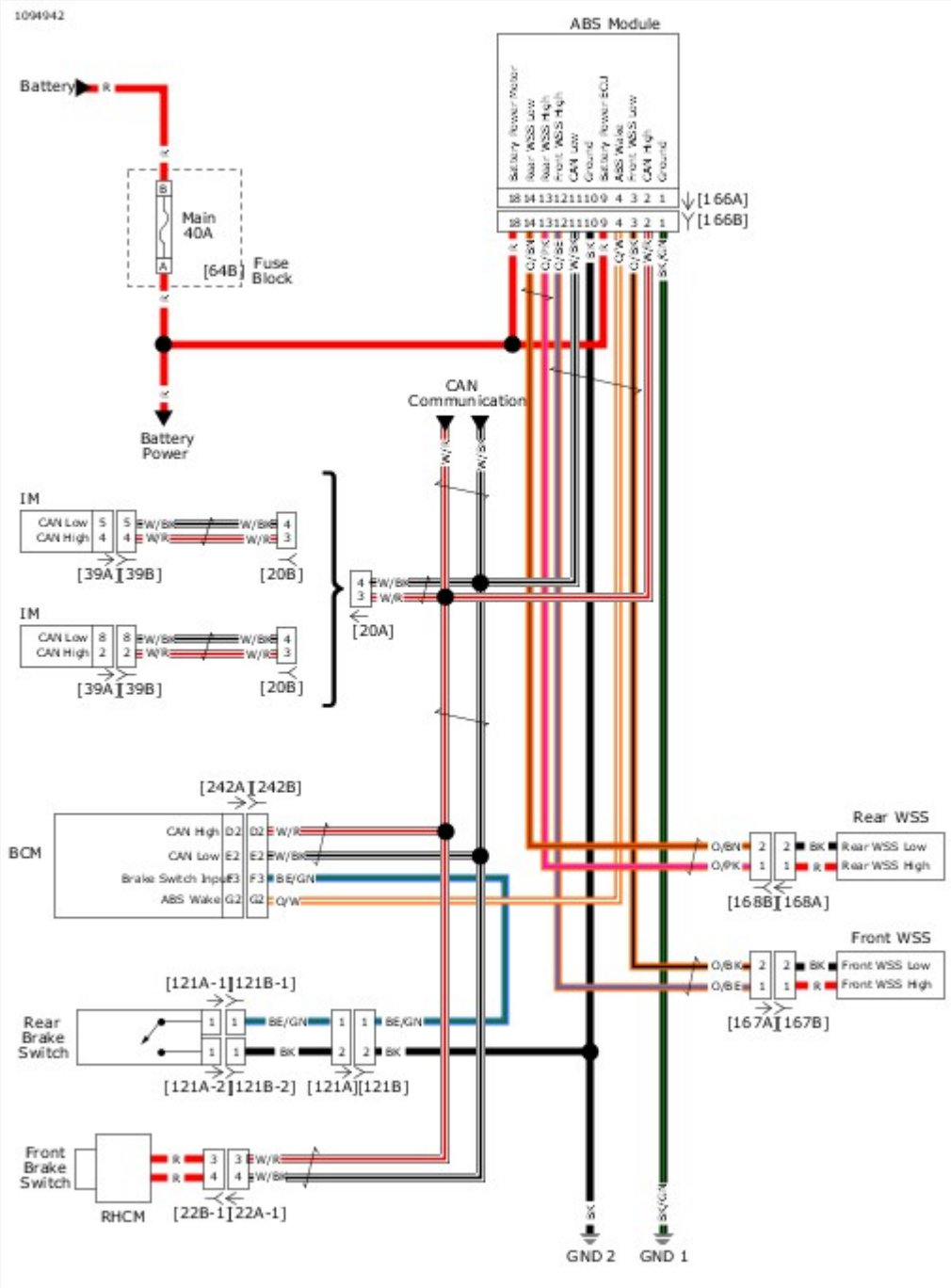

View interactive image

Figure 3. ABS Schematic

Table 1. ABS Indicator Continuously Flashing, No DTCs Diagnostic Faults

POSSIBLE CAUSES
Incorrect wheel bearing
Bearing not properly installed
Damaged wheel bearing

1. DTC Test

1. Verify vehicle is equipped with ABS and has appropriate IM.
2. Clear DTCs.
3. Turn IGN OFF.
4. Check DTCs.
5. Did DTCs set?
    a. **Yes.** See appropriate diagnostic procedure.
    b. **No.** Go to Test 2.

2. Wheel Bearing Inspection Test

1. Inspect for worn, damaged or incorrect bearing assembly on the front wheel.

NOTE

A correctly installed ABS wheel bearing will have a gray seal facing outward.

- If the seal is red, the bearing is installed backward.
- If the wheel bearing has a metallic shield, it is a non-ABS bearing and should be replaced with the correct bearing.

2. Inspect for worn, damaged or incorrect bearing assembly on both wheels.
3. Were worn, damaged or incorrect components found on either wheel?
    a. **Yes.** Repair wheel bearing as needed.
    b. **No.** System working properly.

Special Tools

Description	Part Number	Qty.
TEST CONNECTOR KIT	HD-41404	1
BREAKOUT BOX	HD-42682	1
JUMPER HARNESS	HD-45325	1
BREAKOUT BOX	HD-50390-1	1
ABS OVERLAY	HD-50390-1-P1	1
ABS CABLE	HD-50390-6	1

Table 1. ABS Indicator Always On or Inoperative Diagnostic Faults

POSSIBLE CAUSES
Open battery circuit
Open ground circuit
Short to ground in battery circuit

1. DTC Test

1. Verify vehicle is equipped with ABS and has appropriate IM.
2. Clear DTCs.
3. Turn IGN OFF.
4. Check DTCs.
5. Did DTCs set?
    a. **Yes.** See appropriate diagnostic procedure.
    b. **No.** Go to Test 2.

2. ABS Lamp Function Test

1. Perform a "WOW" test. See Initial Diagnostics → Initial Diagnostics.
2. Does ABS lamp function properly during the "WOW" test?
    a. **Yes.** Go to Test 3.
    b. **No.** Replace IM.

3. CAN High Circuit Continuity Test

1. Turn IGN OFF.
2. Connect BREAKOUT BOX (Part Number:HD-50390-1) and ABS CABLE (Part Number:HD-50390-6) to wiring harness [166B], leaving ABS module [166A] disconnected. See Initial Diagnostics → DIAGNOSTIC TOOLS.
3. Verify ABS OVERLAY (Part Number:HD-50390-1-P1) is in position on BOB.

4. Connect **BREAKOUT BOX (Part Number:HD-42682)** and **JUMPER HARNESS (Part Number:HD-45325)** between wire harness [39B] and IM [39A]. See **Initial Diagnostics → DIAGNOSTIC TOOLS**.
5. Using **TEST CONNECTOR KIT (Part Number:HD-41404)**, test resistance between ABS BOB terminal 2 and IM BOB terminal (BK) 2.
6. Is resistance less than 0.5 ohm?

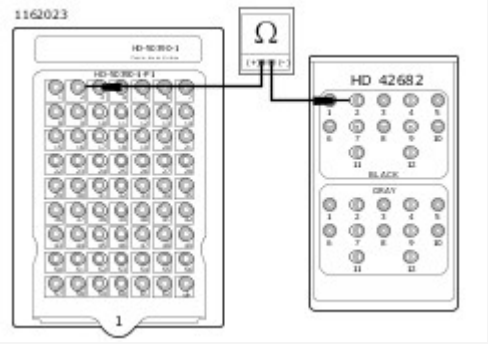

View interactive image

Figure 1.

a. **Yes.** **Go to Test 4.**
b. **No.** Repair open in (W/R) wire.

4. CAN Low Circuit Continuity Test

1. Turn IGN OFF.
2. Test resistance between ABS BOB terminal 11 and IM BOB terminal (BK) 8.
3. Is resistance less than 0.5 ohm?

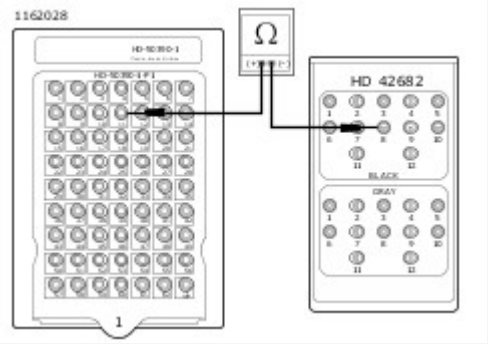

View interactive image

Figure 2.

a. **Yes.** **Go to Test 5.**
b. **No.** Repair open in (W/BK) wire.

5. ABS Power Circuit Test

1. Turn IGN ON.
2. Test voltage between ABS BOB terminal 9 and ground.
3. Test voltage between ABS BOB terminal 18 and ground.
4. Is battery voltage present on both circuits?

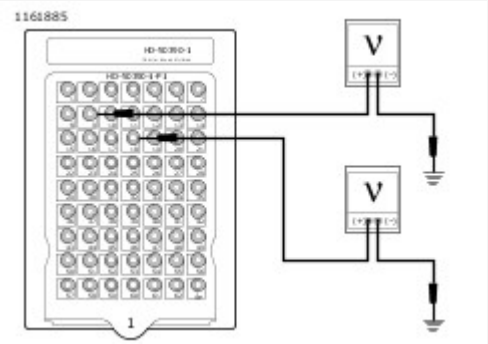

View interactive image

Figure 3.

a. **Yes.** [Go to Test 6.]
b. **No.** Repair open in ABS module battery circuit.

6. ABS Ground Circuit Test

1. Turn IGN OFF.
2. Test resistance between ABS BOB terminal 1 and ground.
3. Is resistance less than 0.5 ohm?

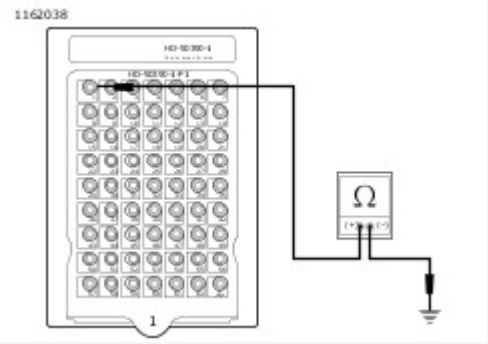

View interactive image

Figure 4.

a. **Yes.** [Go to Test 7.]
b. **No.** Repair open in (BK/GN) wire.

7. ABS Switched Power Circuit Test

1. Turn IGN ON.
2. Test voltage between ABS BOB terminal 4 to ground.
3. Is battery voltage present?
   a. **Yes.** [Go to Test 8.]
   b. **No.** Repair open in (O/W) wire.

8. ABS ECU Test

1. Remove ABS BOB and connect [166].
2. Remove IM BOB and connect [39].
3. Clear DTCs.
4. Start vehicle. Operate in the parameters for initialization self-test.
5. Turn IGN OFF.
6. Check DTCs.
7. Did DTC reset?
    a. **Yes.** Replace EHCU.
    b. **No.** Concern is intermittent. See **Initial Diagnostics → DIAGNOSTICS AND TROUBLESHOOTING → Wiggle Test**.

Wire Color Codes

Wire traces on wiring diagrams are labeled with alpha codes. Refer to Table 1.

For Solid Color Wires: See Figure 1. The alpha code identifies wire color.

For Striped Wires: The code is written with a slash (/) between the solid color code and the stripe code. For example, a trace labeled GN/Y is a green wire with a yellow stripe.

Wiring Diagram Symbols

See Figure 1. On wiring diagrams and in service/repair instructions, connectors are identified by a number in brackets [ ]. The letter inside the brackets identifies whether the housing is a socket or pin housing.

A=Pin: The letter A and the pin symbol after a connector number identifies the pin side of the terminal connectors.

B=Socket: The letter B and the socket symbol after a connector number identifies the socket side of the terminal connectors. Other symbols found on the wiring diagrams include the following:

Diode: The diode allows current flow in one direction only in a circuit.

Wire break: The wire breaks are used to show option variances or page breaks.

No Connection: Two wires crossing over each other in a wiring diagram that are shown with no splice indicating they are not connected together.

Circuit to/from: This symbol indicates a more complete circuit diagram on another page. The symbol is also identifying the direction of current flow.

Splice: Splices are where two or more wires are connected together along a wiring diagram. The indication of a splice only indicates that wires are spliced to that circuit. It is not the true location of the splice in the wiring harness.

Ground: Grounds can be classified as either clean or dirty grounds. Clean grounds are identified by a (BK/GN) wire and are normally used for sensors or modules.

NOTE

Clean grounds usually do not have electric motors, coils or anything that may cause electrical interference on the ground circuit.

Dirty grounds are identified by a (BK) wire and are used for components that are not as sensitive to electrical interference.

Twisted pair: This symbol indicates the two wires are twisted together in the harness. This minimizes the circuit's electromagnetic interference from external sources. If repairs are necessary to these wires they should remain as twisted wires.

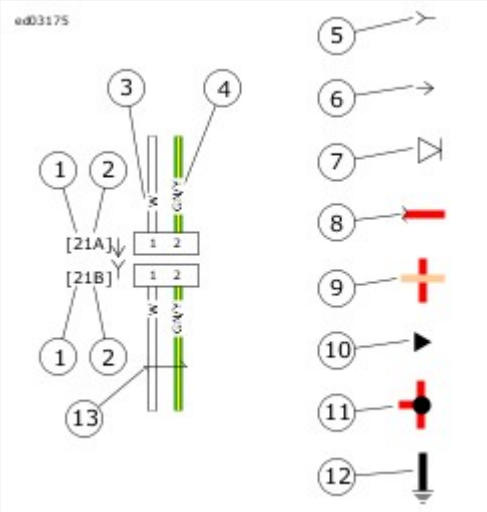

View interactive image

1	Connector number
2	Terminal code (A=pin, B=socket)
3	Solid wire color
4	Striped wire color
5	Socket symbol
6	Pin symbol
7	Diode
8	Wire break
9	No connection
10	Circuit to/from
11	Splice
12	Ground
13	Twisted pair

Figure 1. Connector/Wiring Diagram Symbols

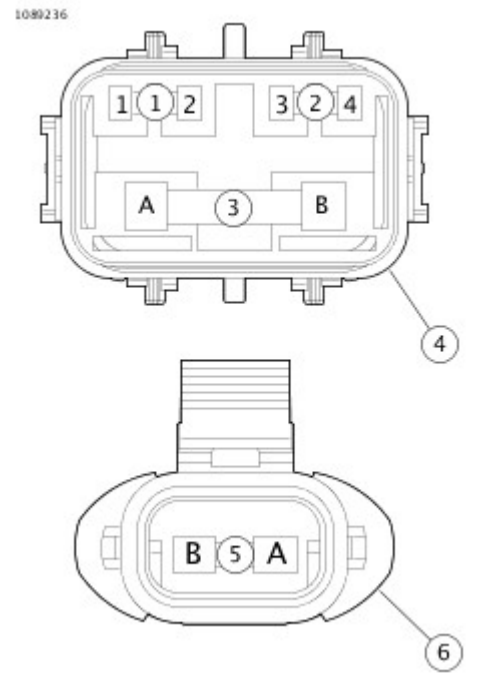

View interactive image

1	Battery
2	Battery tender
3	Main
4	Fuse block [64]
5	System power
6	Fuse block [332]

Figure 2. Fuse Blocks and Socket Terminals

Table 1. Wire Color Codes

ALPHA CODE	WIRE COLOR
BE	Blue
BK	Black
BN	Brown
GN	Green
GY	Gray
LBE	Light Blue
LGN	Light Green
O	Orange

PK	Pink
R	Red
TN	Tan
V	Violet
W	White
Y	Yellow

Refer to the table below for wiring diagram information.

WIRING DIAGRAM LIST

FIGURE	NUMBER
Power Distribution: 2019 Softail	Figure 1.
Sensor Grounds: 2019 Softail	Figure 2.
Ground Circuit: 2019 Softail	Figure 3.
Front Lighting and Hand Controls: 2019 Softail	Figure 4.
Backbone Harness 1 of 3: 2019 Softail	Figure 5.
Engine Harness 2 of 3: 2019 Softail	Figure 6.
Main Harness 3 of 3: 2019 Softail	Figure 7.
Rear Lighting: 2019 Softail	Figure 8.

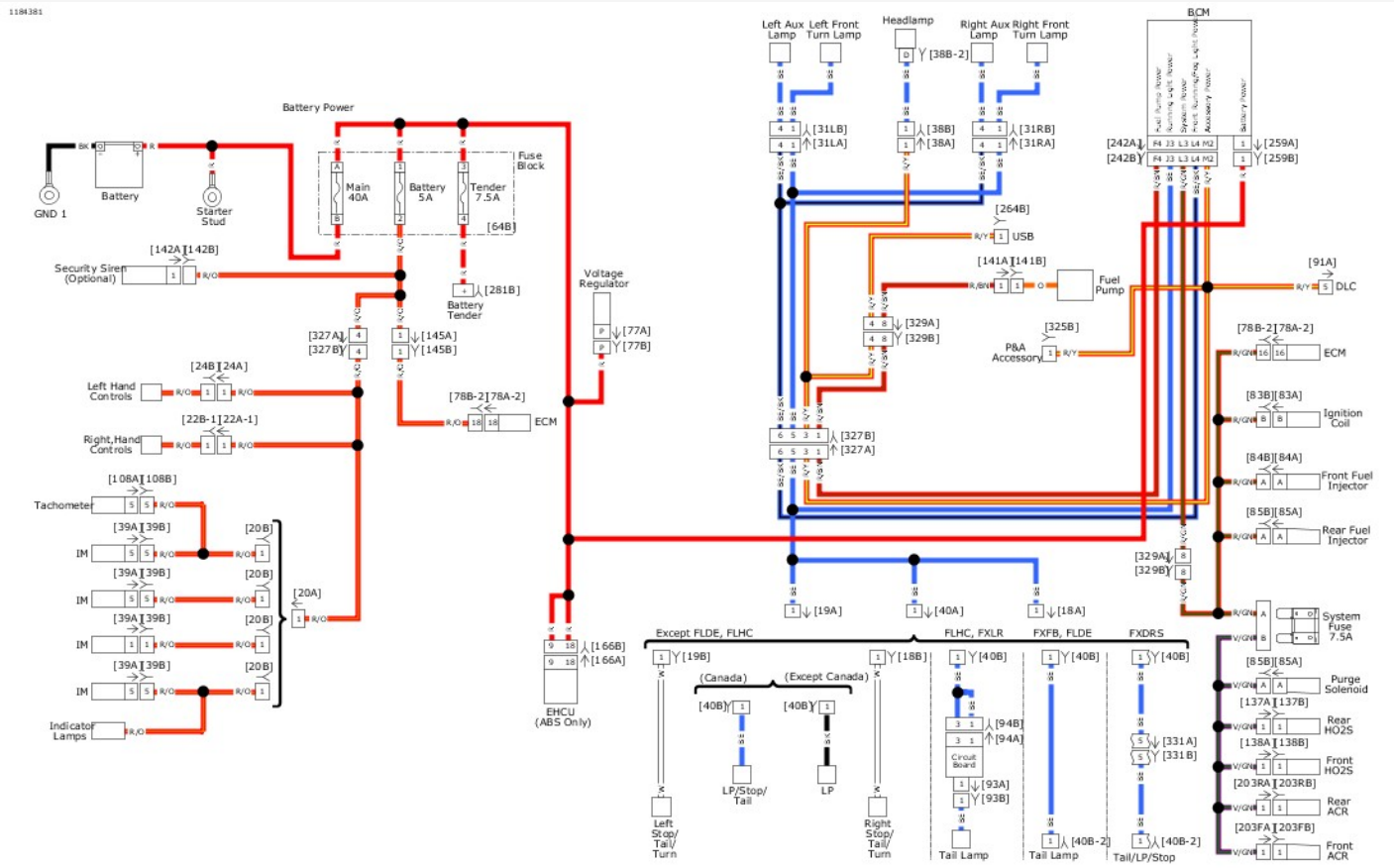

View interactive image

Figure 1. Power Distribution: 2019 Softail

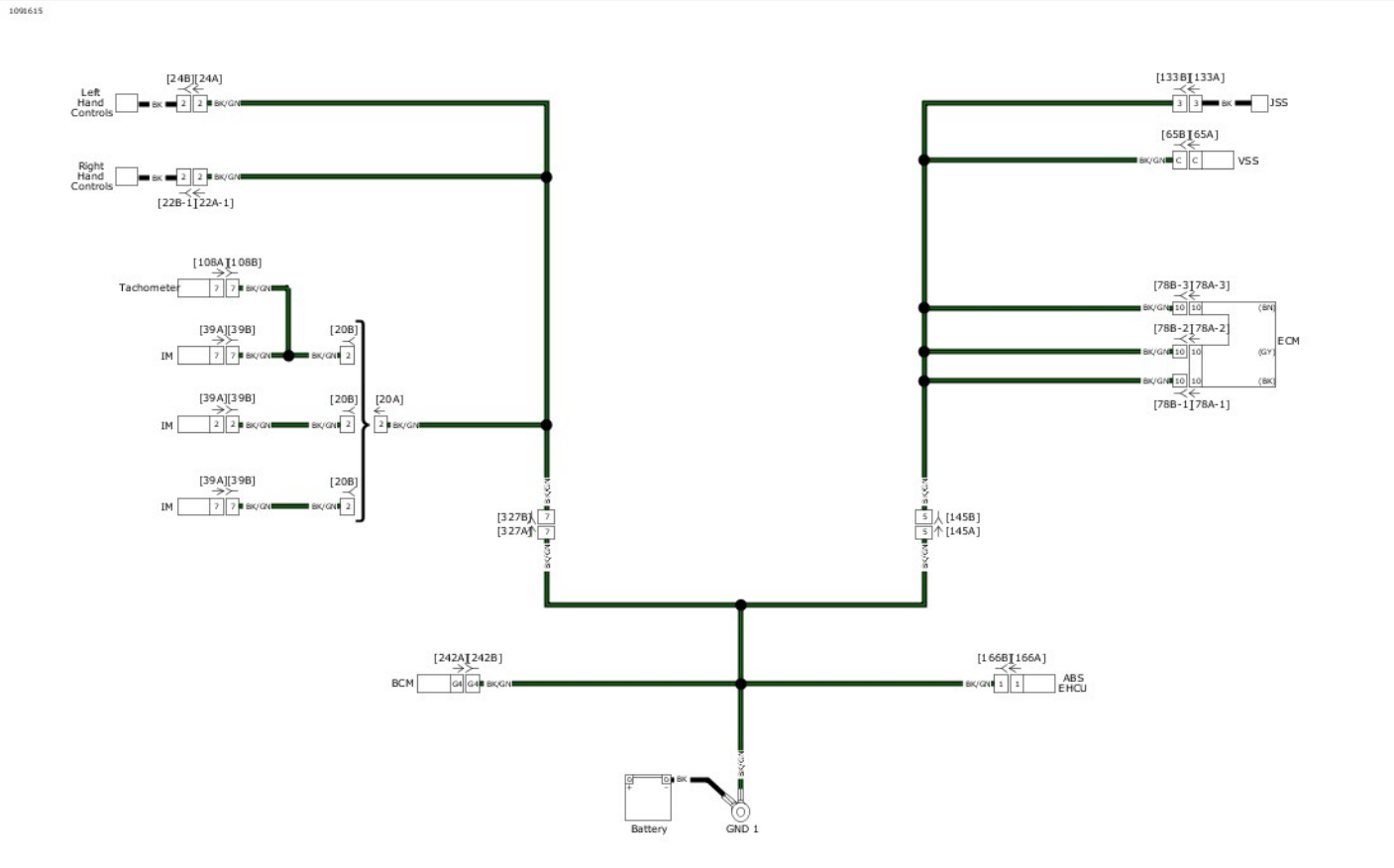

View interactive image

Figure 2. Sensor Grounds: 2019 Softail

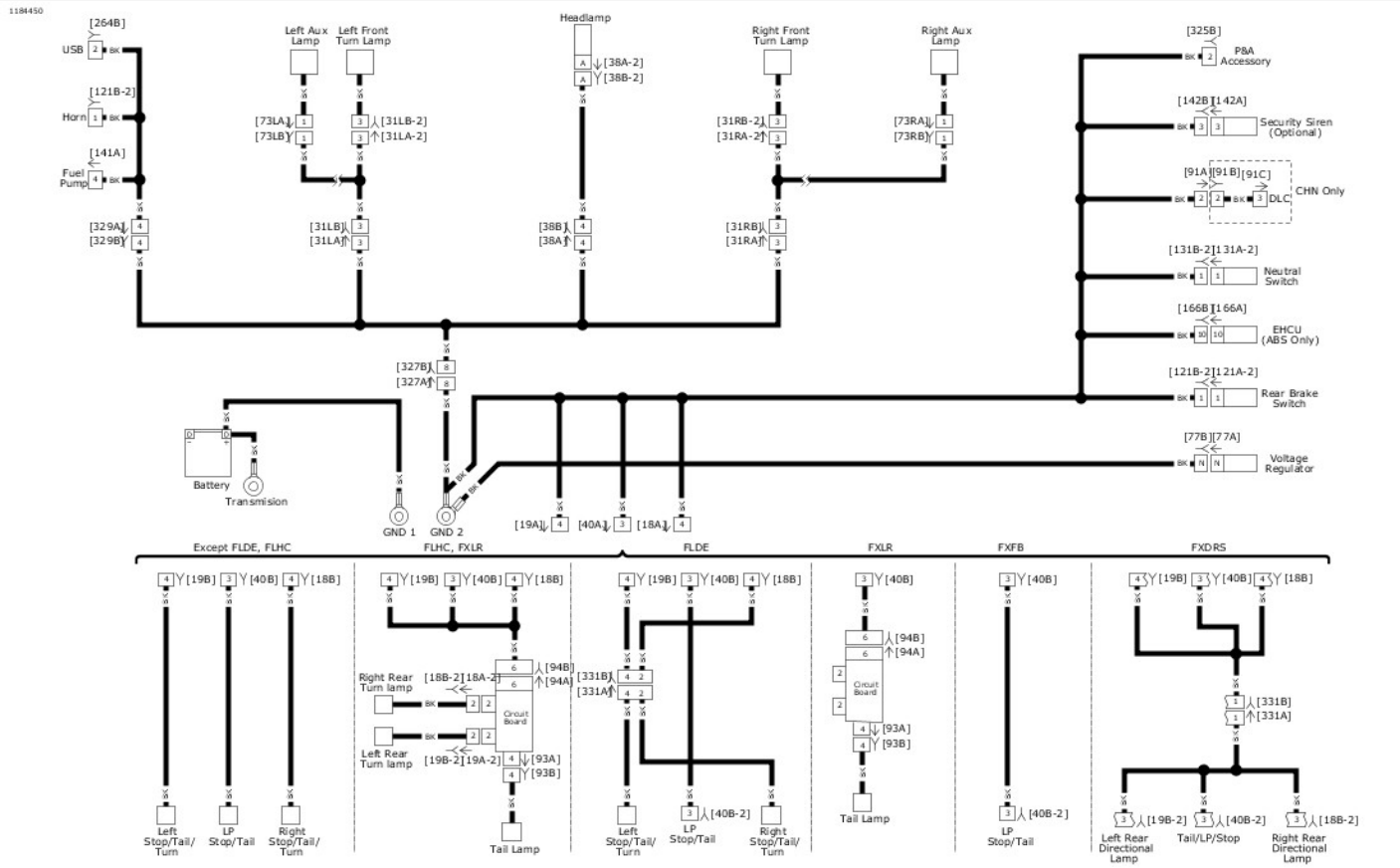

View interactive image

View interactive image

Figure 3. Ground Circuit: 2019 Softail

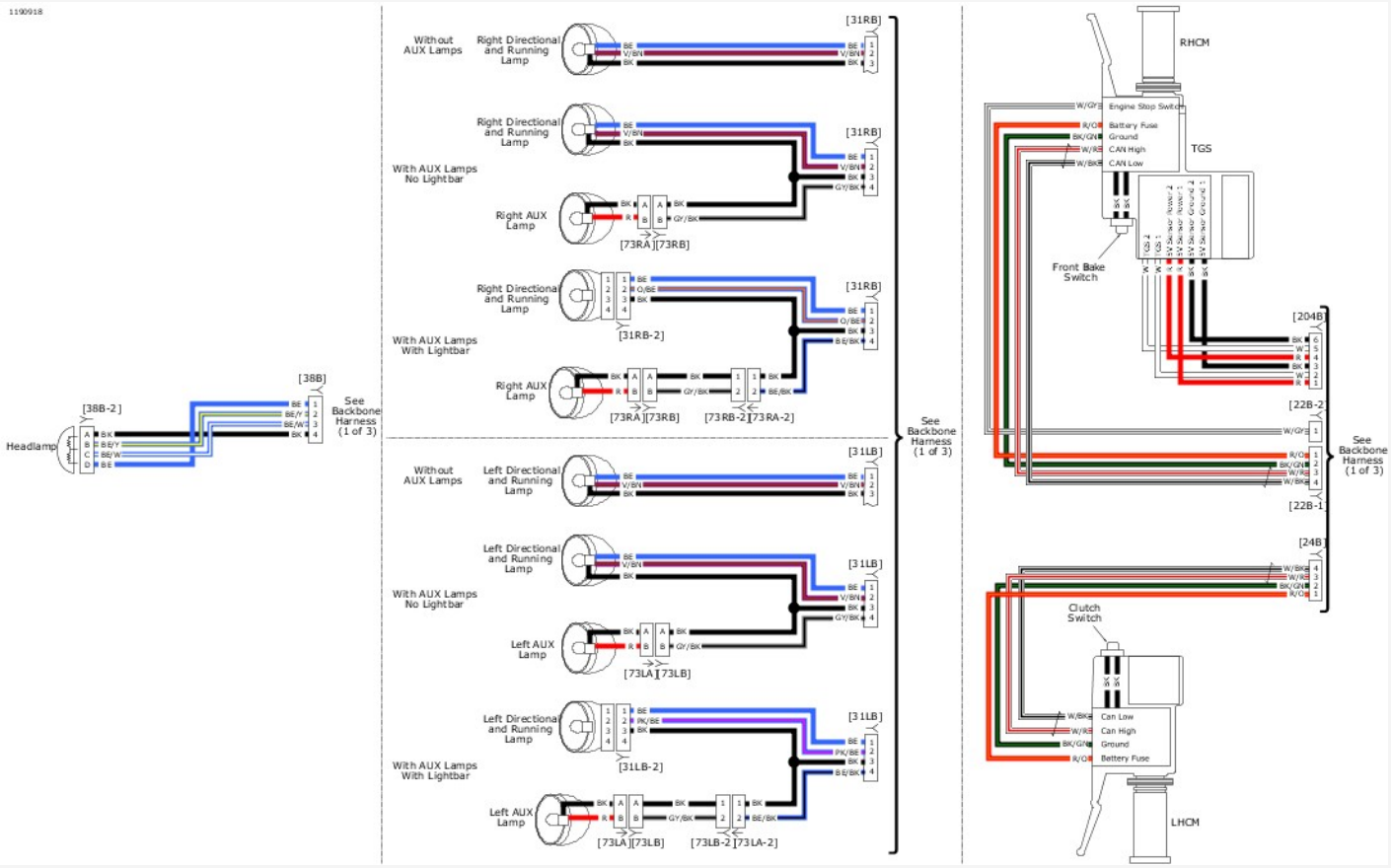

View interactive image

Figure 4. Front Lighting and Hand Controls: 2019 Softail

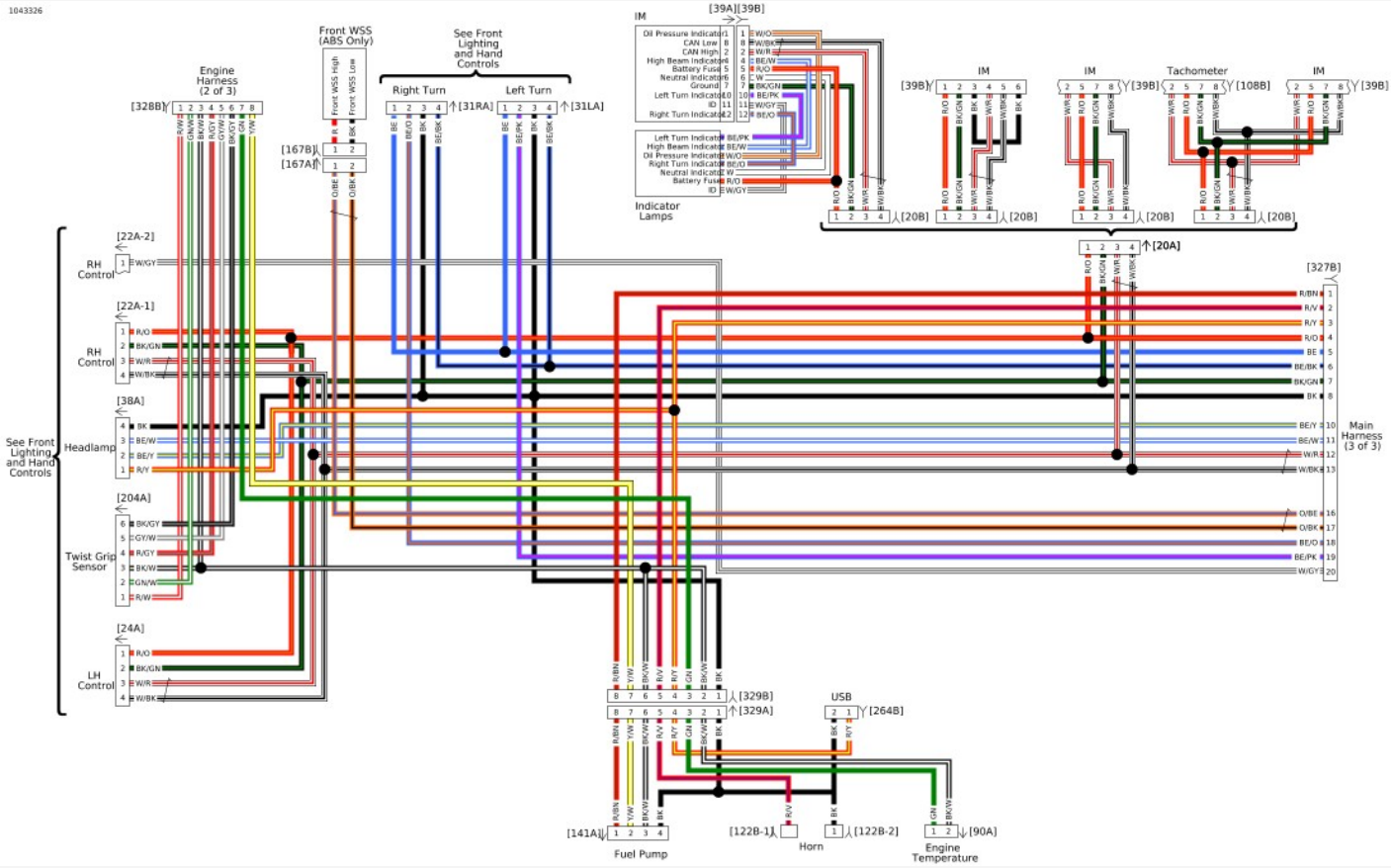

View interactive image

Figure 5. Backbone Harness 1 of 3: 2019 Softail

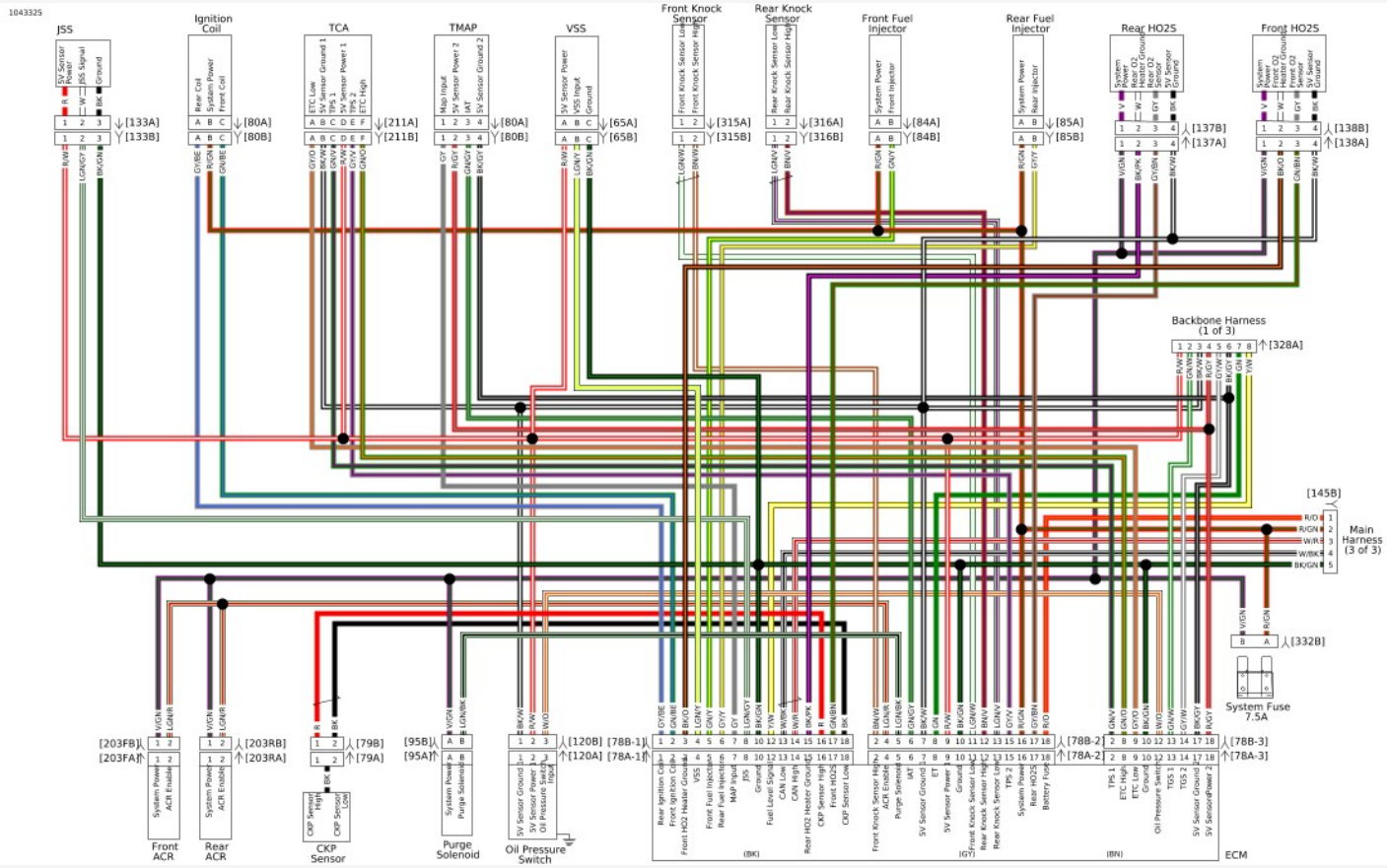

View interactive image

View interactive image

Figure 6. Engine Harness 2 of 3: 2019 Softail

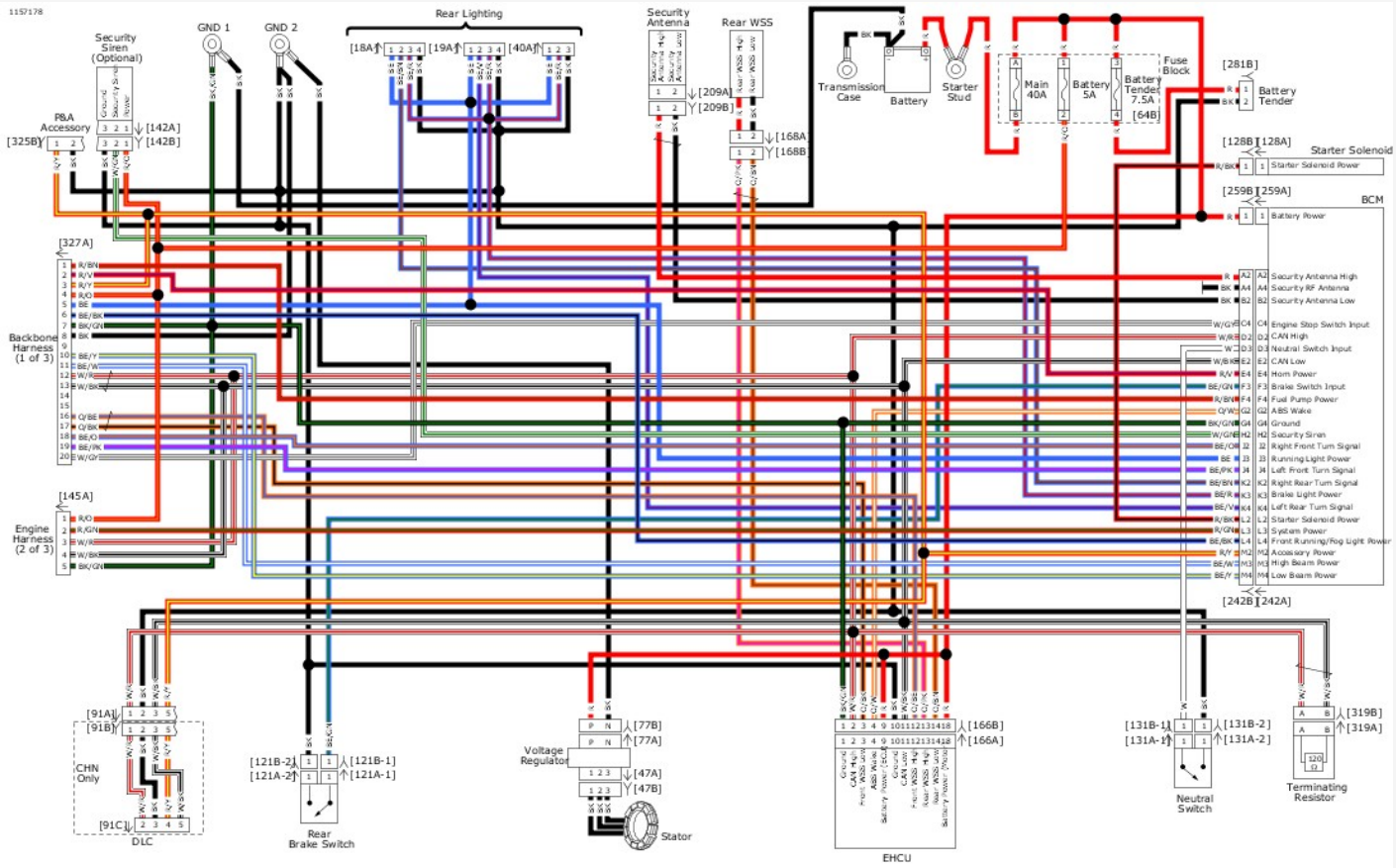

View interactive image

Figure 7. Main Harness 3 of 3: 2019 Softail

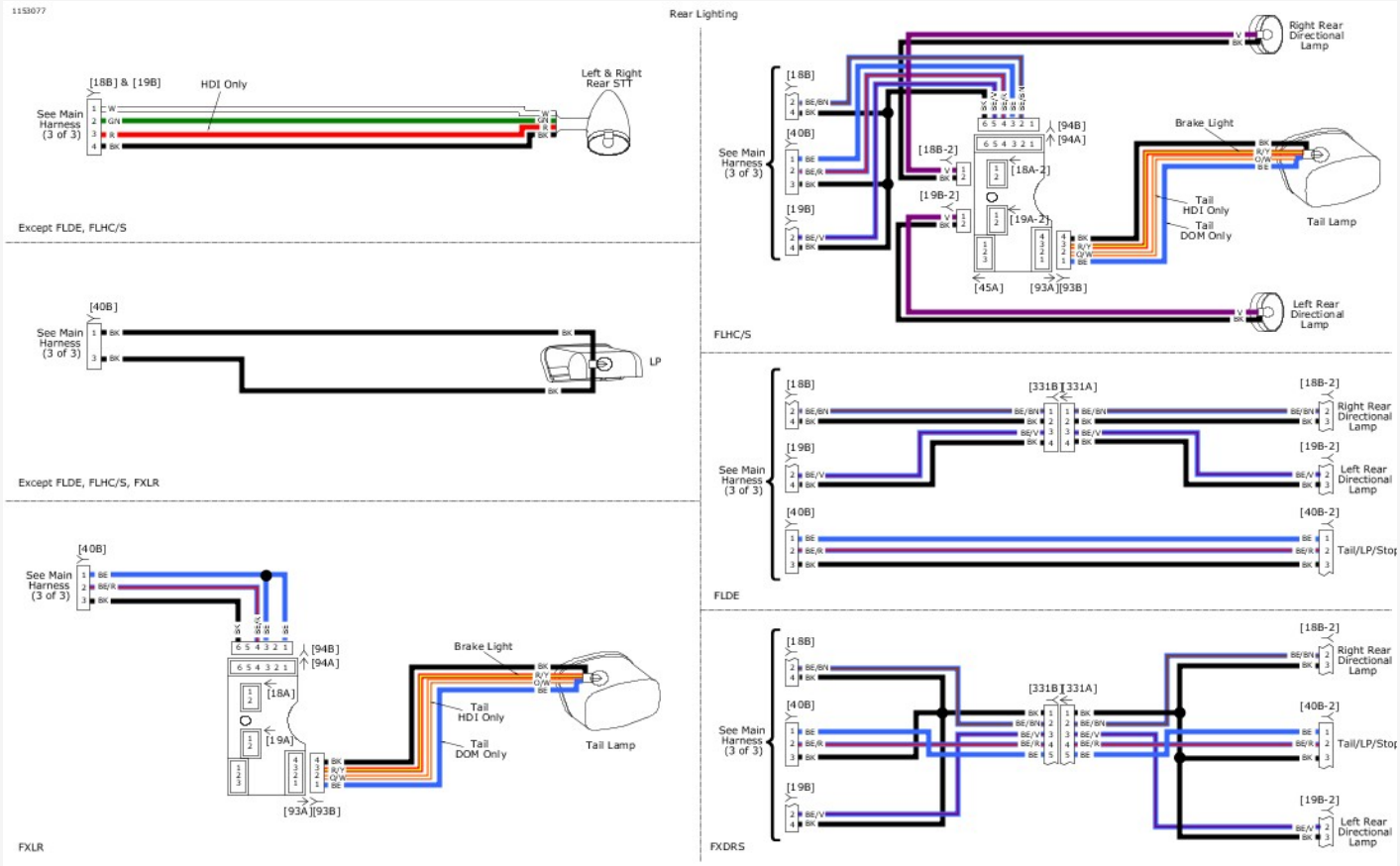

View interactive image

Figure 8. Rear Lighting: 2019 Softail

Function/Location

All vehicle connectors are identified by their function and location. Refer to Table 1.

Place and Color

The place (number of wire cavities of a connector housing) and color of the connector can also aid identification.

Connector Number

On wiring diagrams and in service instructions, connectors are identified by a number in brackets.

Repair Instructions

The repair instructions in Appendix B of the electrical diagnostic manual (EDM) are by connector type. Refer to Table 1.

Table 1. Softail Connector Locations

NO.	DESCRIPTION	TYPE	TERMINAL PROBE COLOR	LOCATION
[18]	Right rear stop, tail and turn assembly	4-place JAE MX19 Sealed (BK)	Yellow	Under seat
[18-2]	Right rear turn	4-place JAE MX19 Sealed (BK)	Yellow	Inside light bar (FLDE) Inside stop lamp (FLHC/S)
[19]	Left rear stop, tail and turn assembly	4-place JAE MX19 Sealed (BK)	Yellow	Under seat
[19-2]	Left rear turn	4-place JAE MX19 Sealed (BK)	Yellow	Inside light bar (FLDE) Inside stop lamp (FLHC/S)
[20]	Console harness	4-way JST JWPF Sealed (BK)	Yellow	Inside frame behind grommet
[22-1]	Right hand controls	4-place JAE MX19 Sealed (BK)	Yellow	Caddy inside left frame behind grommet
[22-2]	Right hand controls	2-place JAE MX19 Sealed (BK)	Yellow	Under frame in front of front cylinder
[24]	Left hand controls	4-place JAE MX19 Sealed (BK)	Yellow	Under frame in front of front cylinder
[31L]	Left front turn signal/auxiliary lamp	4-way JAE MX19 Sealed (GY)	Yellow	Caddy inside left frame behind grommet
[31R]	Right front turn signal/auxiliary lamp	4-way JAE MX19 Sealed (GY)	Yellow	Under frame in front of front cylinder
[31R-2]	Right front turn/auxiliary lamp with light bar	4-way JAE MX19 Sealed (GY)	Yellow	Inside light bar (FLDE)

[31L-2]	Left front turn/auxiliary lamp with light bar	4-way JAE MX19 Sealed (GY)	Yellow	Inside light bar (FLDE)
[38]	Headlamp	4-place Deutsch DTM Sealed (BK) (FXBR/S, FXFR/S)	Brown	Caddy inside left frame behind grommet
[38-2]	Headlamp	4-way Delphi 150 Metri-Pack (BK)	Gray	Inside headlamp nacelle
[39]	IM	12-place Delphi Micro 64 Sealed (GY) (except FXBR/S, FXBB) 6-place JST JWPF Sealed (BK) (FXBR/S, FXBB)	BOB Yellow	IM
[40]	Center rear lighting	3-place Tyco MCON 1.2 Sealed (BK)	Gray	Under seat
[40-2]	Tail lamp	4-place JAE MX19 Sealed (BK)	Yellow	Inside light bar Back of tail lamp (FLDE)
[47]	Voltage regulator to stator	3-place Dekko (BK)	Green	Back of voltage regulator
[64]	Fuse block	Delphi 280 Metri-pack Sealed Delphi 800 Metri-pack Sealed (main fuse)	Purple/Red	Behind left side cover
[65]	VSS	3-place Delphi GT 150 3.5 Sealed (BK)	Gray	Top of transmission under battery
[73L-2]	Left auxiliary lamps	2-place JAE MX19 Unsealed (BK)	Yellow	Inside light bar (FLDE)
[73L]	Left auxiliary lamps	2-way Delphi 280 Metri-Pack	Purple	Inside auxiliary/fog lamps sealed (BK)
[73R-2]	Right auxiliary lamps	2-place JAE MX19 (BK)	Yellow	Inside light bar (FLDE)
[73R]	Right auxiliary lamps	2-way Delphi 280 Metri-Pack	Purple	Inside auxiliary/fog lamps sealed (BK)
[77]	Voltage regulator	2-place Dekko (BK)	Green	Back of voltage regulator
[78-1]	ECM	18-place Tyco GET 64 Sealed (BK)	BOB	Behind left side cover under fuse block caddy
[78-2]	ECM	18-place Tyco GET 64 Sealed (GY)	BOB	Behind left side cover under fuse block caddy
[78-3]	ECM	18-place Tyco GET 64 Sealed (GY)	BOB	Behind left side cover under fuse block caddy
[79]	CKP sensor	2-place Deutsch DTM Sealed (BK)	Brown	Back of voltage regulator bracket
[80]	TMAP	4-place Tyco MCON 1.2 Sealed (BK)	Gray	Top of induction module
[83]	Ignition coil	3-place Delphi GT 150 Sealed (BK)	Gray	Rear of coil
[84]	Front fuel injector	2-place Delphi GT 150 3.5 Sealed	Gray	Beneath fuel tank

		(GY)		
[85]	Rear fuel injector	2-place Delphi GT 150 3.5 Sealed (GY)	Gray	Beneath fuel tank
[90]	ET sensor	2-place Tyco MCON 1.2 Sealed (GY)	Gray	Under frame below fuel tank
[91]	DLC	6-place Deutsch DT Sealed (GY)	Black	Behind left side cover
[93]	Tail lamp	4-way Tyco 070 Multilock Unsealed (BK)	Gray	Circuit board under tail lamp assembly
[94]	Rear fender lights harness in circuit board	6-place Tyco 070 Multilock Unsealed (BK)	Gray	Circuit board under tail lamp assembly (FLHC, FXLR)
[95]	Purge solenoid	2-place Delphi 150 Metri-pack Sealed (BK)	Gray	Under seat in front of rear fender
[108]	Tachometer	12-place Delphi Micro 64 Sealed (GY)	BOB	Behind tachometer
[120]	Oil pressure switch	3-place Delphi GT 150 3.5 (BK)	Gray	Front right crankcase
[121]	Rear stop lamp switch	Tyco Insulated Spade terminal (BK)	Red	Right side of engine behind voltage regulator
[122]	Horn	Flag terminals (BK)	Red	USB caddy under frame in front of front cylinder
[128]	Starter solenoid	Tyco Insulated Spade terminal (W)	Red	Top of starter
[131]	Neutral switch	Right Angle Push On Molded (BK)		Top of transmission
[133]	JSS	3-place Molex MX 150 Sealed (BK)	Gray	Back of voltage regulator bracket
[137]	HO2 sensor (rear)	4-place Molex MX 150 Sealed (BK)	Gray	Under seat in front of battery
[138]	HO2 sensor (front)	4-place Molex MX 150 Sealed (BK)	Gray	Behind voltage regulator
[141]	Fuel pump and sender	4-place Molex MX150 Sealed (BK)	Gray	USB caddy under frame in front of front cylinder
[142]	Security siren (optional)	3-place Delphi GT 150 3.5 Sealed (BK)	Gray	Electrical panel behind fender extension
[145]	Engine harness	5-way Tyco MCON 1.2	Gray	Under seat
[166]	ABS EHCU	18-place Tyco MCON 1.2 Sealed (BK)	BOB	Behind right side cover
[167]	Front WSS	2-place JAEMX19 Sealed (GY)	Yellow	Under frame in front of front cylinder
[168]	Rear WSS	2-place Deutsch DTM Sealed (BK)	Brown	Behind right side cover
[203F]	ACR (front)	2-place Tyco Superseal 1.5 Sealed	Gray	Under frame below fuel tank

[203R]	ACR (rear)	2-place Tyco Superseal 1.5 Sealed	Gray	Under frame below fuel tank
[204]	TGS	6-place JST JWPF Sealed	Yellow	Caddy inside left frame behind grommet
[209]	Security antenna	2-place Molex MX 64 Unsealed (BK)	Light Blue	Under seat
[211]	TCA	6-way Delphi GT 150 Sealed (BK)	Gray	Right side of engine (induction module)
[242]	BCM	48-place Molex CMC Sealed (BK)	BOB	Front of rear wheel behind splash guard
[259]	BCM battery power	1-place Delphi 800 Metri-pack Sealed (BK)	Red	Front of rear wheel behind splash guard
[264]	USB	2-way Deutsch DT (GY)	Black	USB caddy under frame in front of front cylinder
[281]	Battery tender	2-way over mold (BK)		Behind left side cover
[315]	Front knock sensor	2-way Kostal MLK 1.2	Light blue	Under fuel tank
[316]	Rear knock sensor	2-way Kostal MLK 1.2	Light blue	Under fuel tank
[319]	Terminating resistor	2-way Delphi GT 150 (BK)	Gray	Behind left side cover
[325]	P&A accessory	3-way Molex MX150 (BK)	Gray	Behind left side cover
[327]	Backbone harness interconnect	20-way Molex MX150 (BK)	Gray	Under seat
[328]	Engine harness interconnect	8-way JST JWPF Sealed (BK)	Yellow	Under fuel tank behind rear cylinder
[329]	USB caddy interconnect	8-way Molex MX150	Gray	USB caddy under frame in front of front cylinder
[331]	Rear light bar interconnect	4-place JAE MX19 Sealed (BK) 6-place Deutsch DTM Sealed (BK)	Yellow	Inside light bar (FLDE) Left side behind swingarm bracket (FXDRS)
[332]	Fuse holder	2-way Delphi Metri-Pack 280	Gray	Under seat
[GND1] [GND2] [GND2A]	Rear ground stud Front ground stud (Regulator) Front ground stud	Ring terminals		Under seat

Table 1. Right Rear Turn Signal [18]

TERMINAL	WIRE COLOR	CIRCUIT DESCRIPTION
1	-	N/C
2	BE/BN	Right rear turn signal
3	-	N/C
4	BK	Ground

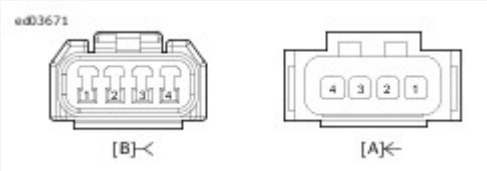

View interactive image

Figure 1. Right Rear Turn Signal [18]

Table 2. Right Rear Turn Signal [18-2]

TERMINAL	WIRE COLOR	CIRCUIT DESCRIPTION
1	-	N/C
2	BE/BN	Right rear turn signal
3	BK	Ground
4	-	N/C

View interactive image

Figure 2. Right Rear Turn Signal [18-2]

Table 3. Left Rear Turn Signal [19]

TERMINAL	WIRE COLOR	CIRCUIT DESCRIPTION
1	-	N/C
2	BE/BN	Left rear turn signal

3	-	N/C
4	BK	Ground

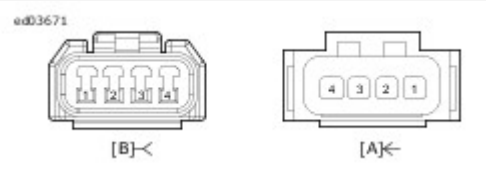

View interactive image

Figure 3. Left Rear Turn Signal [19]

Table 4. Left Rear Turn Signal [19-2]

TERMINAL	WIRE COLOR	CIRCUIT DESCRIPTION
1	-	N/C
2	BE/V	Left rear turn signal
3	BK	Ground
4	-	N/C

View interactive image

Figure 4. Left Rear Turn Signal [19-2]

Table 5. Console Harness [20]

TERMINAL	WIRE COLOR	CIRCUIT DESCRIPTION
1	R/O	Battery fuse
2	BK/GN	Ground
3	W/R	CAN high
4	W/BK	CAN low

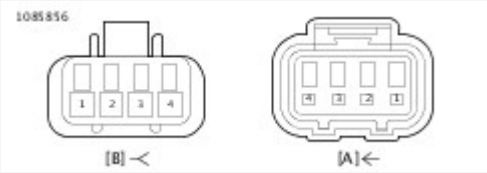

View interactive image

Figure 5. Console Harness [20]

Table 6. RHCM [22-1]

TERMINAL	WIRE COLOR	CIRCUIT DESCRIPTION
1	R/O	Battery fuse
2	BK	Ground
3	W/R	CAN high
4	W/BK	CAN low

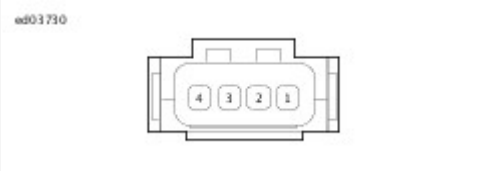

View interactive image

Figure 6. RHCM [22-1]

Table 7. RHCM [22-2]

TERMINAL	WIRE COLOR	CIRCUIT DESCRIPTION
1	W/GY	Engine stop switch
2	-	N/C

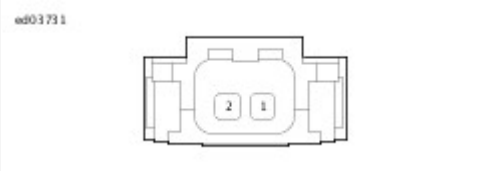

View interactive image

Figure 7. RHCM [22-2]

Table 8. LHCM [24]

TERMINAL	WIRE COLOR	CIRCUIT DESCRIPTION
1	R/O	Battery fuse
2	BK	Ground
3	W/R	CAN high
4	W/BK	CAN low

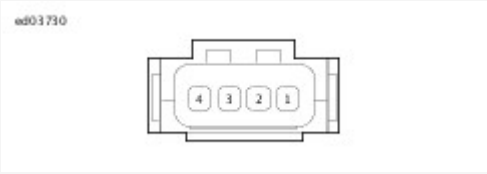

View interactive image

Figure 8. LHCM [24]

Table 9. Front Left Turn Signal [31L]

TERMINAL	WIRE COLOR	CIRCUIT DESCRIPTION
1	BE	Position
2	BE/PK	Left front turn signal
3	BK	Ground
4	BE/BK	AUX/fog

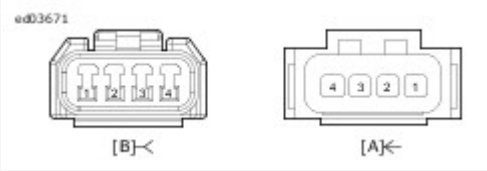

View interactive image

Figure 9. Front Left Turn Signal [31L]

Table 10. Front Left Turn [31L-2]

TERMINAL	WIRE COLOR	CIRCUIT DESCRIPTION
1	BE	Position
2	BE/PK	Left front turn signal
3	BK	Ground

4	-	N/C

View interactive image

Figure 10. Front Left Turn [31L-2]

Table 11. Front Right Turn Signal [31R]

TERMINAL	WIRE COLOR	CIRCUIT DESCRIPTION
1	BE	Position
2	BE/O	Right front turn signal
3	BK	Ground
4	BE/BK	AUX/fog

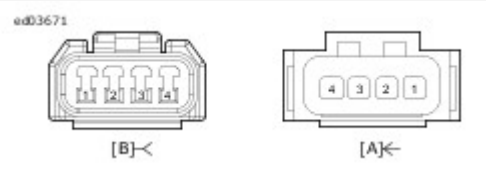

View interactive image

Figure 11. Front Right Turn Signal [31R]

Table 12. Front Right Turn Signal [31R-2]

TERMINAL	WIRE COLOR	CIRCUIT DESCRIPTION
1	BE	Position
2	BE/O	Right front turn signal
3	BK	Ground
4	-	N/C

View interactive image

Figure 12. Front Right Turn Signal [31R-2]

Table 13. Headlamp [38]

TERMINAL	WIRE COLOR	CIRCUIT DESCRIPTION
1	BE	Running/position lamp
2	BE/Y	Low beam
3	BE/W	High beam
4	BK	Ground

View interactive image

Figure 13. Headlamp [38]

Table 14. Headlamp [38-2]

TERMINAL	WIRE COLOR	CIRCUIT DESCRIPTION
A	BK	Ground
B	BE/Y	Low beam
C	BE/W	High beam
D	BE	Running/position lamp

View interactive image

Figure 14. Headlamp [38-2]

Table 15. IM [39] (12 place connector)

TERMINAL	WIRE COLOR	CIRCUIT DESCRIPTION

1	W/O	Oil pressure indicator
2	W/R	CAN high
3	-	N/C
4	BE/W	High beam indicator
5	R/O	Battery fuse
6	W	Neutral indicator
7	BK/GN	Ground
8	W/BK	CAN low
9	-	N/C
10	BE/PK	Left turn indicator
11	W	Indicator type ID
12	BE/O	Right turn indicator

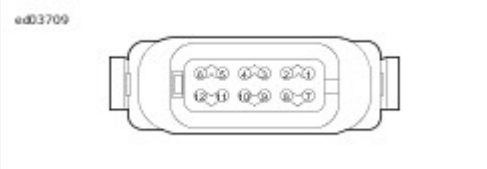

View interactive image

Figure 15. IM [39] (12 place connector)

Table 16. IM [39] (6 place connector)

TERMINAL	WIRE COLOR	CIRCUIT DESCRIPTION
1	R/O	Battery fuse
2	BK/GN	Ground
3	BK	Spare
4	W/R	CAN +
5	W/BK	CAN low
6	BK	H-D link

View interactive image

Figure 16. IM [39] (6 place connector)

Table 17. Center Lighting [40]

TERMINAL	WIRE COLOR	CIRCUIT DESCRIPTION
1	BE	Running/position lamps
2	BE/R	Brake lamp power
3	BK	Ground

View interactive image

Figure 17. Center Lighting [40]

Table 18. Stop Tail Lamp [40-2]

TERMINAL	WIRE COLOR	CIRCUIT DESCRIPTION
1	BE	Position
2	BE/R	Brake lamp power
3	BK	Ground
4	-	N/C

View interactive image

Figure 18. Stop Tail Lamp [40-2]

Table 19. Stator [47]

TERMINAL	WIRE COLOR	CIRCUIT DESCRIPTION
1	BK	Stator
2	BK	Stator
3	BK	Stator

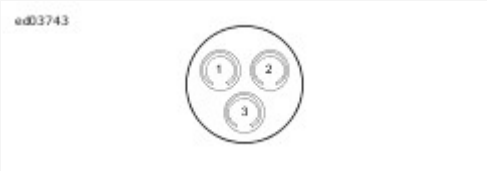

View interactive image

Figure 19. Stator [47]

Table 20. Fuse Block [64]

TERMINAL	WIRE COLOR	CIRCUIT DESCRIPTION
1	R	Battery
2	R/O	Battery fuse
3	R	Battery
4	R	Tender fuse
A	R	Battery/main fuse
B	R	Battery/main fuse

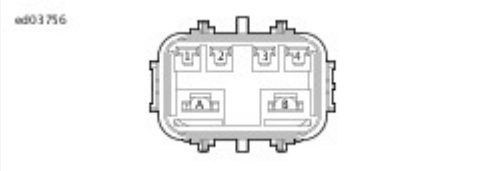

View interactive image

Figure 20. Fuse Block [64]

Table 21. VSS [65]

TERMINAL	WIRE COLOR	CIRCUIT DESCRIPTION
A	R/W	5 Volt sensor power

B	LGN/Y	VSS input
C	BK/GN	Sensor ground

View interactive image

Figure 21. VSS [65]

Table 22. Auxiliary/Fog Lamps [73L]

TERMINAL	WIRE COLOR	CIRCUIT DESCRIPTION
A	BK	Ground
B	GY/BK	Front running/fog light power

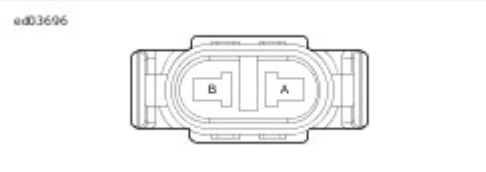

View interactive image

Figure 22. Auxiliary/Fog Lamps [73L]

Table 23. Left Auxiliary/Fog Lamps [73L-2]

TERMINAL	WIRE COLOR	CIRCUIT DESCRIPTION
1	BK	Ground
2	BE/BK	Front running/fog light power

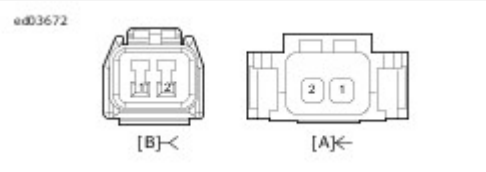

View interactive image

Figure 23. Left Auxiliary/Fog Lamps [73L-2]

Table 24. Auxiliary/Fog Lamps [73R]

TERMINAL	WIRE COLOR	CIRCUIT DESCRIPTION
A	BK	Ground
B	GY/BK	Front running/fog light power

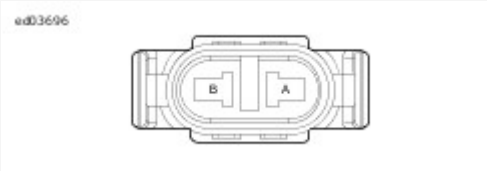

View interactive image

Figure 24. Auxiliary/Fog Lamps [73R]

Table 25. Right Auxiliary/Fog Lamp [73R-2]

TERMINAL	WIRE COLOR	CIRCUIT DESCRIPTION
1	BK	Ground
2	BE/BK	Front running/fog light power

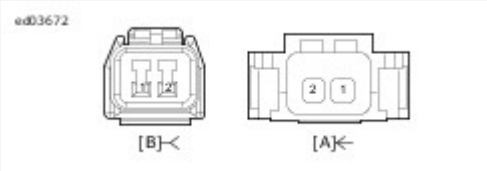

View interactive image

Figure 25. Right Auxiliary/Fog Lamp [73R-2]

Table 26. Voltage Regulator [77]

TERMINAL	WIRE COLOR	CIRCUIT DESCRIPTION
P	R	Battery
N	BK	Ground

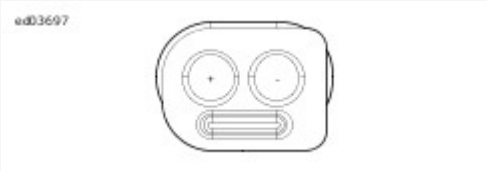

View interactive image

View interactive image

Figure 26. Voltage Regulator [77]

Table 27. ECM [78-1]

TERMINAL	WIRE COLOR	CIRCUIT DESCRIPTION
1	GY/BE	Rear ignition coil
2	GN/BE	Front ignition coil
3	BK/O	Front HO2S heater ground
4	LGN/Y	VSS input
5	GN/Y	Front fuel injector
6	GY/Y	Rear fuel injector
7	GY	MAP input
8	LGN/GY	JSS signal
9	-	N/C
10	BK/GN	Ground
11	-	N/C
12	Y/W	Fuel level
13	W/BK	CAN low
14	W/R	CAN high
15	BK/PK	Rear HO2S heater ground
16	R	CKP sensor high
17	GN/BN	Front HO2S
18	BK	CKP sensor low

View interactive image

Figure 27. ECM [78-1]

Table 28. ECM [78-2]

TERMINAL	WIRE COLOR	CIRCUIT DESCRIPTION
1	-	N/C
2	BN/W	Front knock sensor +
3	-	N/C
4	LGN/R	ACR enable
5	LGN/BK	Purge solenoid
6	GN/GY	IAT
7	BK/W	5 Volt sensor ground
8	GN	ET sensor
9	R/W	5 Volt sensor power
10	BK/GN	Ground
11	LGN/W	Front knock sensor -
12	BN/V	Rear knock sensor +
13	LGN/V	Rear knock sensor -
14	-	N/C
15	GN/V	TPS 2
16	R/GN	System power
17	GY/BN	Rear HO2S
18	R/O	Battery fuse

View interactive image

Figure 28. ECM [78-2]

Table 29. ECM [78-3] (BN)

TERMINAL	WIRE COLOR	CIRCUIT DESCRIPTION
1	-	N/C
2	GN/V	TPS1

3	-	N/C
4	-	N/C
5	-	N/C
6	-	N/C
7	-	N/C
8	GN/O	TCA high
9	GY/O	TCA low
10	BK/GN	Ground
11	-	N/C
12	W/O	Oil pressure
13	GN/W	TGS 1
14	GY/W	TGS 2
15	-	N/C
16	-	N/C
17	BK/GY	5V sensor ground 2
18	R/GY	5V sensor power 2

View interactive image

Figure 29. ECM [78-3]

Table 30. CKP Sensor [79]

TERMINAL	WIRE COLOR	CIRCUIT DESCRIPTION
1	R	CKP sensor high
2	BK	CKP sensor low

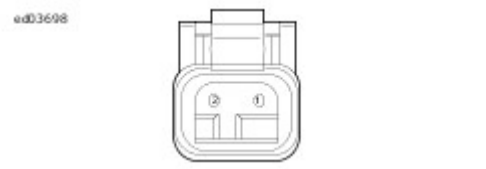

View interactive image

Figure 30. CKP Sensor [79]

Table 31. TMAP [80]

TERMINAL	WIRE COLOR	CIRCUIT DESCRIPTION
1	GY	MAP input
2	R/GY	5V sensor power 2
3	GN/GY	IAT
4	BK/GY	5V sensor ground 2

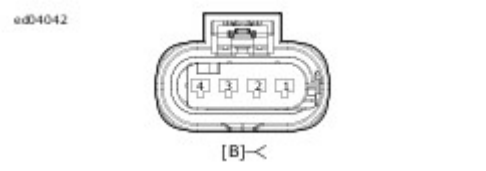

View interactive image

Figure 31. TMAP [80]

Table 32. Ignition Coil [83]

TERMINAL	WIRE COLOR	CIRCUIT DESCRIPTION
A	GY/BE	Rear ignition coil
B	R/GN	System power
C	GN/BE	Front ignition coil

View interactive image

Figure 32. Ignition Coil [83]

Table 33. Front Fuel Injector [84]

TERMINAL	WIRE COLOR	CIRCUIT DESCRIPTION
A	R/GN	System power
B	GN/Y	Rear fuel injector

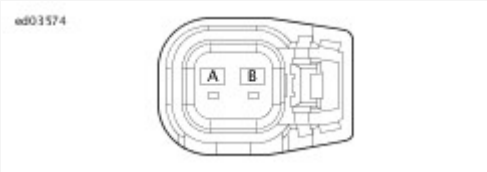

View interactive image

Figure 33. Front Fuel Injector [84]

Table 34. Rear Fuel Injector [85]

TERMINAL	WIRE COLOR	CIRCUIT DESCRIPTION
A	R/GN	System power
B	GY/Y	Front fuel injector

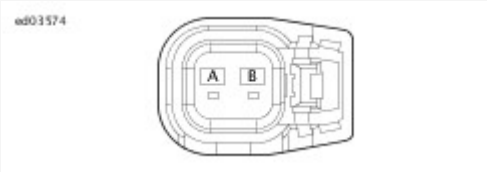

View interactive image

Figure 34. Rear Fuel Injector [85]

Table 35. ET Sensor [90]

TERMINAL	WIRE COLOR	CIRCUIT DESCRIPTION
1	GN	ET sensor
2	BK/W	5V sensor ground

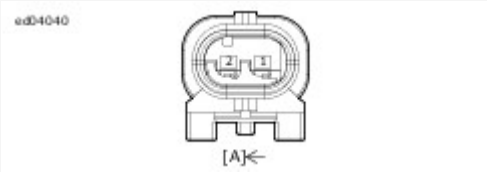

View interactive image

Figure 35. ET Sensor [90]

Table 36. DLC [91]

TERMINAL	WIRE COLOR	CIRCUIT DESCRIPTION
1	W/R	CAN high
2	BK	Ground
3	W/BK	CAN low
4	-	N/C
5	R/Y	Accessory power
6	-	N/C

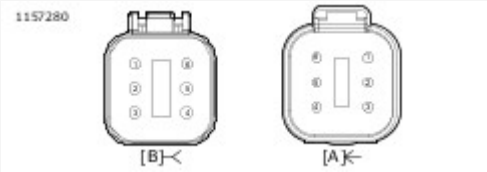

View interactive image

Figure 36. DLC [91]

Table 37. OBD [91C]

TERMINAL	WIRE COLOR	CIRCUIT DESCRIPTION
1	-	N/C
2	W/R	CAN high
3	BK	Ground
4	R/Y	Accessory power
5	W/BK	CAN low
6	-	N/C

View interactive image

Figure 37. OBD [91C]

Table 38. [93]

TERMINAL	WIRE COLOR	CIRCUIT DESCRIPTION
1	BE	Running light power
2	O/W	Accessory power
3	R/Y	Brake lamp power
4	BK	Ground

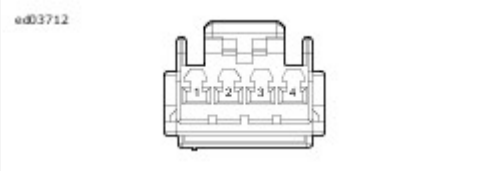

View interactive image

Figure 38. Tail Lamp [93]

Table 39. Stop Tail Lamp [94]

TERMINAL	WIRE COLOR	CIRCUIT DESCRIPTION
1	-	N/C
2	BE/BN	Right rear turn signal
3	BE	Running lights power
4	BE/R	Brake lamp power
5	BE/V	Left rear turn signal
6	BK	Ground

View interactive image

Figure 39. Stop Tail Lamp [94]

Table 40. Purge Solenoid [95]

TERMINAL	WIRE COLOR	CIRCUIT DESCRIPTION
A	R/GN	System power
B	LGN/BK	Purge solenoid

View interactive image

Figure 40. Purge Solenoid [95]

Table 41. Tachometer [108]

TERMINAL	WIRE COLOR	CIRCUIT DESCRIPTION
1	-	N/C
2	W/R	CAN +
3	-	N/C
4	-	N/C
5	R/O	Battery power
6	-	N/C
7	BK/GN	Ground
8	W/BK	CAN -
9	-	N/C
10	-	N/C
11	-	N/C
12	-	N/C

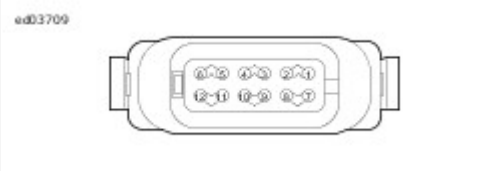

View interactive image

View interactive image

Figure 41. Tachometer [108]

Table 42. Oil Pressure Switch [120]

TERMINAL	WIRE COLOR	CIRCUIT DESCRIPTION
1	BK/W	5V sensor ground
2	R/W	5V sensor power
3	W/O	Oil pressure

View interactive image

Figure 42. Oil Pressure Switch [120]

Table 43. Rear Brake Switch [121-1] [121-2]

TERMINAL	WIRE COLOR	CIRCUIT DESCRIPTION
1	BE/GN	Rear brake switch
1	BK	Ground

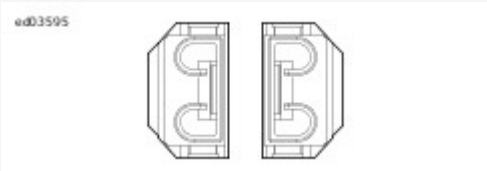

View interactive image

Figure 43. Rear Brake Switch [121-1] [121-2]

Table 44. Horn [122-1] [122-2]

TERMINAL	WIRE COLOR	CIRCUIT DESCRIPTION
1	R/V	Horn power
1	BK	Ground

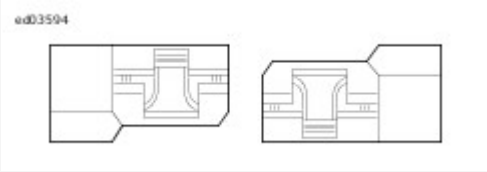

View interactive image

Figure 44. Horn [122-1] [122-2]

Table 45. Starter Solenoid [128]

TERMINAL	WIRE COLOR	CIRCUIT DESCRIPTION
1	R/BK	Starter solenoid power

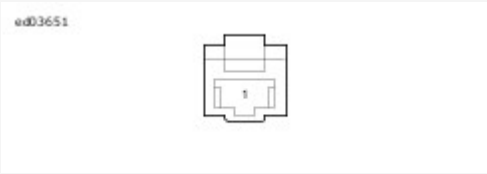

View interactive image

Figure 45. Starter Solenoid [128]

Table 46. Neutral Switch [131-1] [131-2]

TERMINAL	WIRE COLOR	CIRCUIT DESCRIPTION
1	W	Neutral switch input
1	BK	Ground

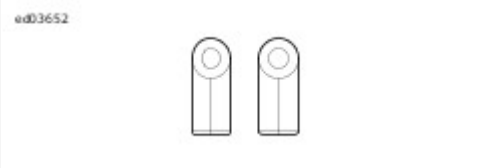

View interactive image

Figure 46. Neutral Switch [131-1] [131-2]

Table 47. Jiffy Stand [133]

TERMINAL	WIRE COLOR	CIRCUIT DESCRIPTION
1	R/W	5 Volt sensor power
2	LGN/GY	JSS signal

3	BK/GN	Sensor ground

View interactive image

Figure 47. Jiffy Stand [133]

Table 48. HO2S Rear [137]

TERMINAL	WIRE COLOR	CIRCUIT DESCRIPTION
1	V/GN	Fuse system power
2	BK/PK	Rear HO2S heater ground
3	GY/BN	Rear HO2S
4	BK/W	5 Volt sensor ground

View interactive image

Figure 48. HO2S Rear [137]

Table 49. HO2S Front [138]

TERMINAL	WIRE COLOR	CIRCUIT DESCRIPTION
1	V/GN	Fuse system power
2	BK/O	Front HO2S heater ground
3	GN/BN	Front HO2S
4	BK/W	5 Volt sensor ground

View interactive image

Figure 49. HO2S Front [138]

Table 50. Fuel Pump [141]

TERMINAL	WIRE COLOR	CIRCUIT DESCRIPTION
1	R/BN	Fuel pump power
2	W/Y	Fuel level sender
3	BK/W	5V sensor ground
4	BK	Ground

View interactive image

Figure 50. Fuel Pump [141]

Table 51. Security Siren (Optional) [142]

TERMINAL	WIRE COLOR	CIRCUIT DESCRIPTION
1	R/O	Power
2	W/GN	Security siren
3	BK	Ground

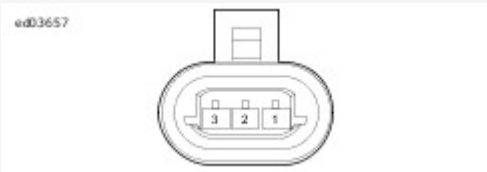

View interactive image

Figure 51. Security Siren (Optional) [142]

Table 52. Engine Harness [145]

TERMINAL	WIRE COLOR	CIRCUIT DESCRIPTION
1	R/O	Battery power
2	R/GN	System power
3	W/R	CAN +
4	W/BK	CAN -
5	BK/GN	Ground

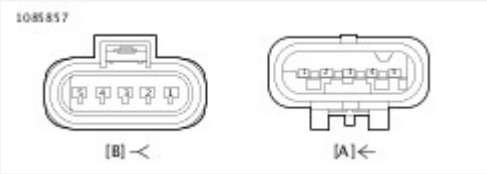

View interactive image

Figure 52. Engine Harness [145]

Table 53. ABS [166]

TERMINAL	WIRE COLOR	CIRCUIT DESCRIPTION
1	BK/GN	Ground
2	W/R	CAN high
3	O/BK	Front WSS low
4	BE/BK	Switched aux lamp PWR
5	-	N/C
6	-	N/C
7	-	N/C
8	-	N/C
9	R	Battery power
10	BK	Ground
11	W/BK	CAN low
12	O/BE	Front WSS high
13	O/PK	Rear WSS high
14	O/BN	Rear WSS low

15	-	N/C
16	-	N/C
17	-	N/C
18	R	Battery power

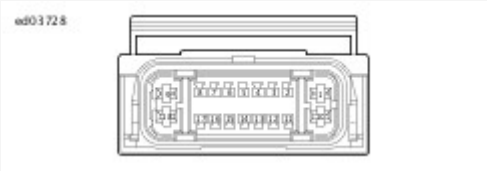

View interactive image

Figure 53. ABS [166]

Table 54. Front WSS [167]

TERMINAL	WIRE COLOR	CIRCUIT DESCRIPTION
1	O/BE	Front WSS high
2	O/BK	Front WSS low

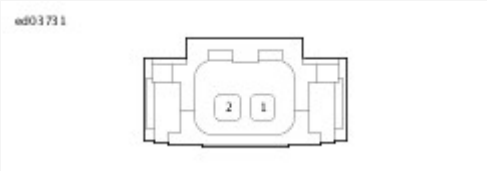

View interactive image

Figure 54. Front WSS [167]

Table 55. Rear WSS [168]

TERMINAL	WIRE COLOR	CIRCUIT DESCRIPTION
1	O/PK	Rear WSS high
2	O/BN	Rear WSS low

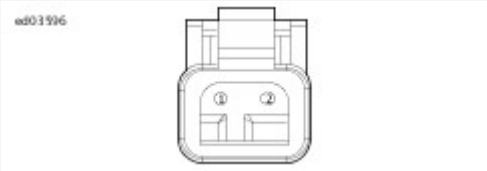

View interactive image

View interactive image

Figure 55. Rear WSS [168]

Table 56. ACR [203]

TERMINAL	WIRE COLOR	CIRCUIT DESCRIPTION
1	R/GN	System power
2	LGN/R	ACR enable

View interactive image

Figure 56. ACR [203]

Table 57. TGS [204A]

TERMINAL	WIRE COLOR	CIRCUIT DESCRIPTION
1	R/W	5V sensor power 1
2	GN/W	TGS 1
3	BK/W	5V sensor ground 1
4	R/GY	5V sensor power 2
5	GY/W	TGS 2
6	BK/GY	5V sensor ground 2

View interactive image

Figure 57. TGS [204]

Table 58. TGS [204B]

TERMINAL	WIRE COLOR	CIRCUIT DESCRIPTION

1	R	5V sensor power 1
2	W	TGS 1
3	BK	5V sensor ground 1
4	R	5V sensor power 2
5	W	TGS 2
6	BK	5V sensor ground 2

View interactive image

Figure 58. TGS [204B]

Table 59. Security Antenna [209]

TERMINAL	WIRE COLOR	CIRCUIT DESCRIPTION
1	R	Security antenna high
2	BK	Security antenna low

View interactive image

Figure 59. Security Antenna [209]

Table 60. TCA [211]

TERMINAL	WIRE COLOR	CIRCUIT DESCRIPTION
A	GY/O	ETC low
B	BK/W	5V sensor ground 1
C	GN/V	TPS 1
D	R/W	5V sensor power 1

E	GY/V	TPS 2
F	GN/O	ETC high

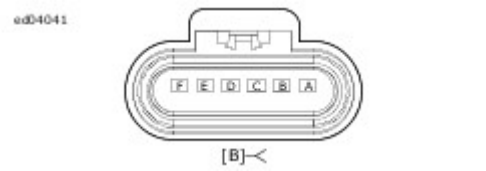

View interactive image

Figure 60. TCA [211]

Table 61. BCM [242]

TERMINAL	WIRE COLOR	CIRCUIT DESCRIPTION
A1	-	N/C
A2	R	Security antenna high
A3	-	N/C
A4	BK	Security RF antenna
B1	-	N/C
B2	BK	Security antenna low
B3	-	N/C
B4	-	N/C
C1	-	N/C
C2	-	N/C
C3	-	N/C
C4	W/GY	Engine stop switch input
D1	-	N/C
D2	W/R	CAN high
D3	W	Neutral switch input
D4	-	N/C
E1	-	N/C
E2	W/BK	CAN low
E3	W/O	Oil pressure switch input

E4	R/V	Horn power
F1	-	N/C
F2	-	N/C
F3	BE/GN	Brake switch input
F4	R/BN	Fuel pump power
G1	-	N/C
G2	O/W	ABS wake
G3	-	N/C
G4	BK/GN	Sensor ground
H1	-	N/C
H2	W/GN	Security siren
H3	-	N/C
H4	-	N/C
J1	-	N/C
J2	BE/O	Right front turn signal
J3	BE	Running lights
J4	BE/PK	Left front turn signal
K1	-	N/C
K2	BE/BN	Right rear turn signal
K3	BE/R	Brake lamp power
K4	BE/V	Left rear turn signal
L1	-	N/C
L2	R/BK	Starter solenoid power
L3	R/GN	System power
L4	BE/BK	Front running/Fog light power
M1	-	N/C
M2	R/Y	Accessory power
M3	BE/W	High beam power
M4	BE/Y	Low beam power

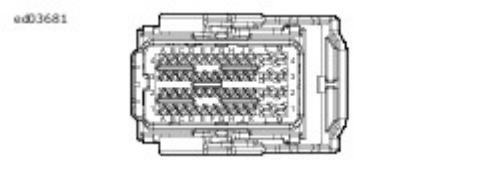

View interactive image

Figure 61. BCM [242]

Table 62. BCM Power [259]

TERMINAL	WIRE COLOR	CIRCUIT DESCRIPTION
1	R	Battery power

View interactive image

Figure 62. BCM Power [259]

Table 63. USB Interconnect [264]

TERMINAL	WIRE COLOR	CIRCUIT DESCRIPTION
1	R/Y	Accessory power
2	BK	Ground

View interactive image

Figure 63. USB Interconnect [264]

Table 64. Battery Tender [281]

TERMINAL	WIRE COLOR	CIRCUIT DESCRIPTION
1	R	Battery power
2	BK	Ground

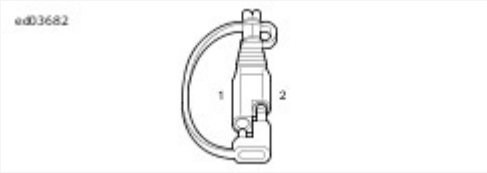

View interactive image

Figure 64. Battery Tender [281]

Table 65. Front Knock Sensor [315]

TERMINAL	WIRE COLOR	CIRCUIT DESCRIPTION
1	LGN/W	Front knock sensor LO
2	BN/W	Front knock sensor HI

View interactive image

Figure 65. Knock Sensor

Table 66. Rear Knock Sensor [316]

TERMINAL	WIRE COLOR	CIRCUIT DESCRIPTION
1	LGN/V	Rear knock sensor LO
2	BN/V	Rear knock sensor HI

View interactive image

Figure 66. Knock Sensor

Table 67. Termination Resister [319]

TERMINAL	WIRE COLOR	CIRCUIT DESCRIPTION

A	W/R	CAN High
B	W/BK	CAN Low

View interactive image

Figure 67. Termination Resister [319]

Table 68. P&A Accessory [325]

TERMINAL	WIRE COLOR	CIRCUIT DESCRIPTION
1	R/Y	Accessory power
2	BK	Ground
3	-	N/C

View interactive image

Figure 68. P&A Accessory [325]

Table 69. Backbone Harness Interconnect [327A]

TERMINAL	WIRE COLOR	CIRCUIT DESCRIPTION
1	R/BN	Fuel pump power
2	R/V	Horn power
3	R/Y	Accessory power
4	R/O	Battery fuse
5	BE	Position lamp
6	BE/BK	AUX/fog lamps
7	BK/GN	Ground

8	BK	Ground
9	-	N/C
10	BE/Y	Low beam
11	BE/W	High beam
12	W/R	CAN +
13	W/BK	CAN -
14	-	N/C
15	-	N/C
16	O/BE	Front WSS +
17	O/BK	Front WSS -
18	BE/O	Front right turn
19	BE/PK	Front left turn
20	W/GY	Run/stop switch

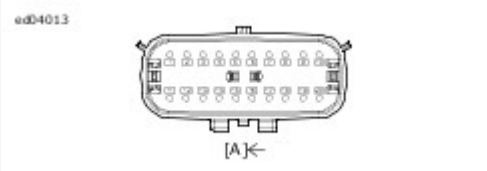

View interactive image

Figure 69. Backbone Harness Interconnect [327A]

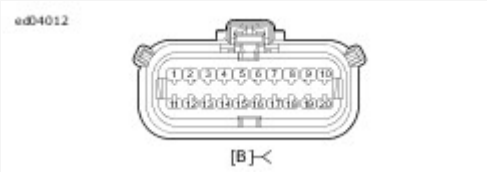

View interactive image

Figure 70. Backbone Harness Interconnect [327B]

Table 70. Engine Harness Interconnect [328]

TERMINAL	WIRE COLOR	CIRCUIT DESCRIPTION
1	R/W	5V sensor power 1
2	GN/W	TGS 1

3	BK/W	5V sensor ground 1
4	R/GY	5V sensor power 2
5	GY/W	TGS 2
6	BK/GY	5V sensor ground 2
7	GN	Engine temperature
8	Y/W	Fuel level

View interactive image

Figure 71. Engine Harness Interconnect [328]

Table 71. USB Caddy Interconnect [329]

TERMINAL	WIRE COLOR	CIRCUIT DESCRIPTION
1	BK	Ground
2	BK/W	5V sensor ground 1
3	GN	Engine temperature
4	R/Y	Accessory power
5	R/V	Horn power
6	BK/W	5V sensor ground 1
7	Y/W	Fuel level
8	R/BN	Fuel pump power

View interactive image

Figure 72. USB Caddy Interconnect [329]

Table 72. Light Bar Interconnect [331] (4 place connector)

TERMINAL	WIRE COLOR	CIRCUIT DESCRIPTION
1	BE/BN	Right rear turn signal
2	BK	Ground
3	BE/V	Left rear turn signal
4	BK	Ground

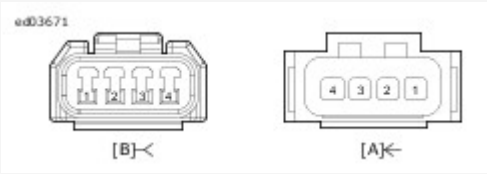

View interactive image

Figure 73. Light Bar Interconnect [331] (4 place connector)

Table 73. Light Bar Interconnect [331] (6 place connector)

TERMINAL	WIRE COLOR	CIRCUIT DESCRIPTION
1	BK	Ground
2	BE/BN	Right rear turn signal
3	BE/V	Left rear turn signal
4	BE/R	Brake light power
5	BE	Running light power

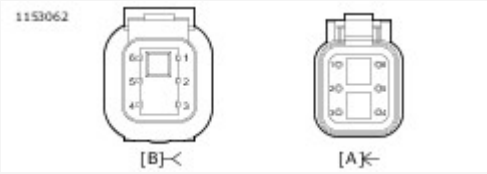

View interactive image

Figure 74. Light Bar Interconnect [331] (6 place connector)

Table 74. Fuse Block [332]

TERMINAL	WIRE COLOR	CIRCUIT DESCRIPTION
A	R/GN	System power
B	V/GN	Fused system power

View interactive image

Figure 75. Fuse Block [332]

Some components and connectors are not easily located on the motorcycle. The following figures show locations for these components and connectors. The figures are generally ordered from front to back around the motorcycle.

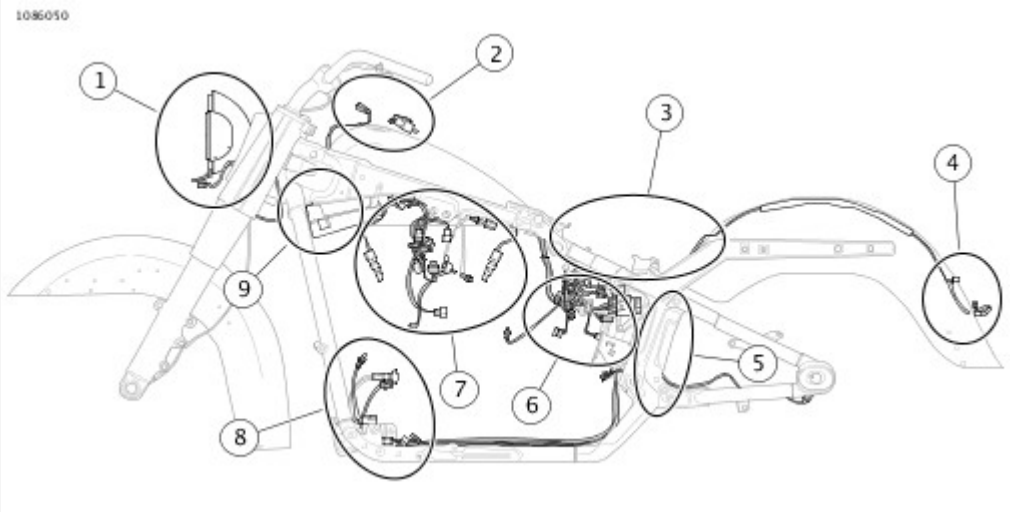

View interactive image

1	Headlamp
2	IM
3	Under seat
4	Tail lamp
5	Front of rear tire
6	Side covers
7	Engine
8	Front of engine
9	USB caddy

Figure 1. Left Side: Typical

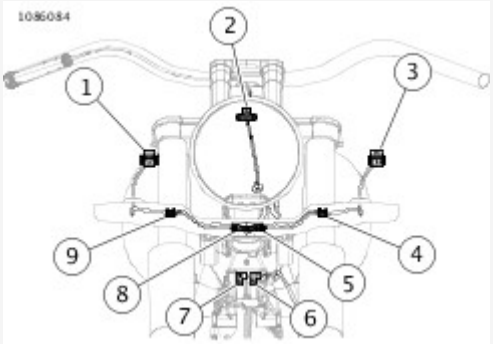

View interactive image

1	Right AUX/fog lamp [73R-2]
2	Headlamp [38-2]
3	Left AUX/fog lamp [73L-2]
4	Front left turn [31L-2]
5	Left AUX/fog lamp [73L]
6	Horn [122-1]
7	Horn [122-2]
8	Right AUX/fog lamp [73R]
9	Front right turn [31R-2]

Figure 2. Headlamp: FLSTC, FLSTN

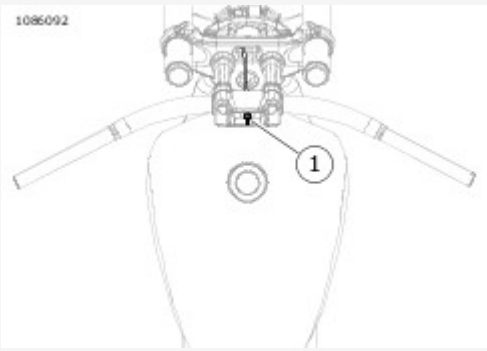

View interactive image

1	IM [39]

Figure 3. IM: FXBB, FXBR

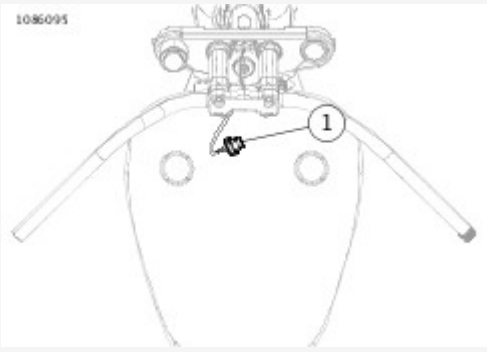

View interactive image

1	IM [39]

Figure 4. IM: FLFB, FLSB, FXFB

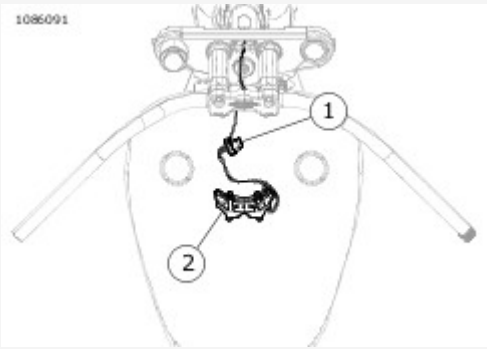

View interactive image

1	IM [39]
2	Indicator lamps

Figure 5. IM: FLDE, FLHC/S, FLSL

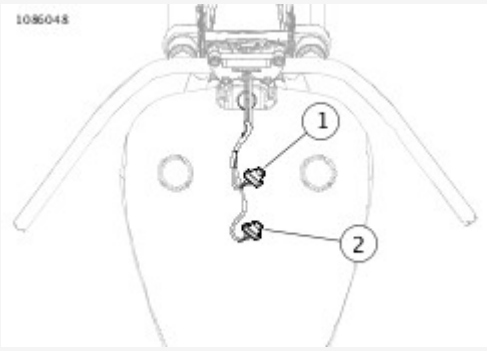

View interactive image

1	IM [39]
2	Tachometer [108]

Figure 6. IM: FXLR

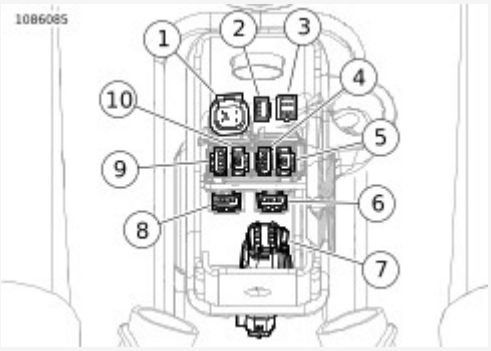

View interactive image

View interactive image

1	Headlamp [38]
2	Console [20]
3	TGS [204]
4	Right front lighting [31R]
5	Front WSS [167]
6	Left front lighting [31L]
7	USB caddy interconnect [329]
8	LHCM [24]
9	RHCM [22-1]
10	RHCM [22-2]

Figure 7. USB Caddy

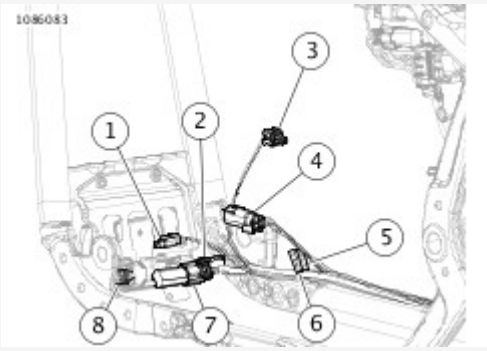

View interactive image

1	CKP [79]
2	Voltage regulator [77]
3	Oil pressure sensor [120]
4	Front HO2S [138]
5	Rear brake switch [121-1]
6	Rear brake switch [121-2]
7	JSS [133]
8	Stator [47]

Figure 8. Front of Engine: Typical

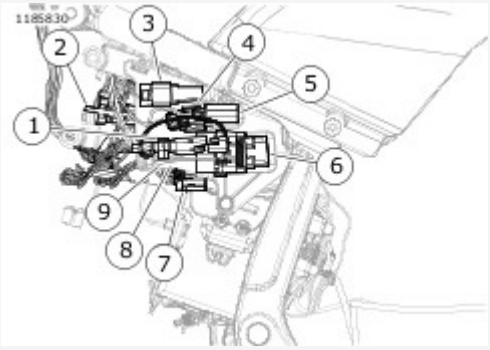

View interactive image

1	Battery tender [281]
2	DLC [91]
3	Termination resistor [319]
4	P&A accessory [325]
5	Fuse holder [332]
6	Fuse block [64]
7	ECM [78-3]
8	ECM [78-2] (behind sub caddy)
9	ECM [78-1] (behind sub caddy)

Figure 9. Behind Left Side Cover

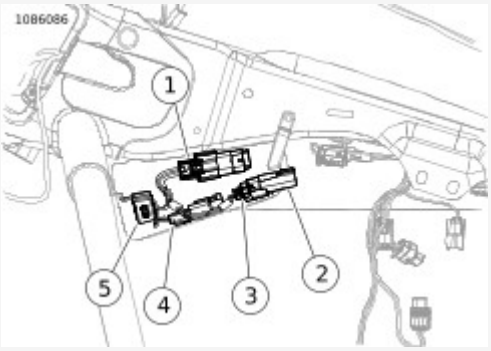

View interactive image

1	USB caddy interconnect [329]
2	USB [264]
3	Fuel pump [141]

4	ET sensor [90]

Figure 10. Under Fuel Tank Left Side

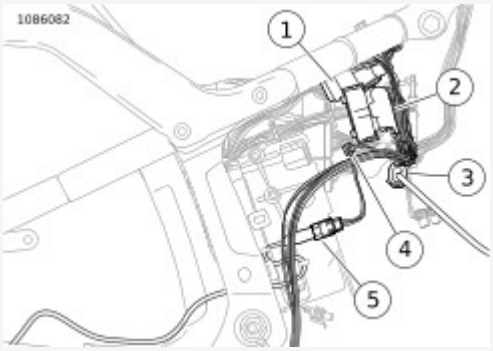

View interactive image

1	Engine harness [145]
2	ABS EHCU [166]
3	Rear HO2S [137]
4	Starter solenoid [128]
5	Rear WSS [168]

Figure 11. Behind Right Side Cover

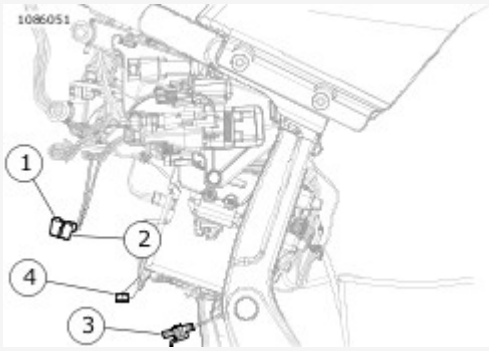

View interactive image

1	Neutral [131-1]
2	Neutral [131-2]
3	VSS [65]
4	Transmission GND

Figure 12. Top of Transmission

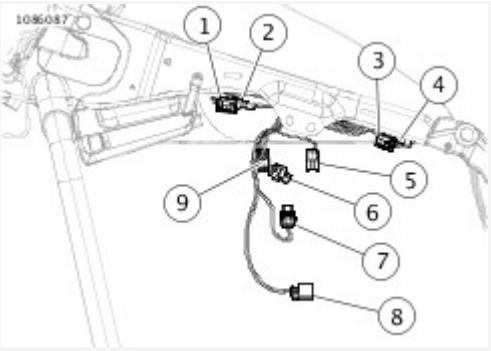

View interactive image

1	Front knock sensor [315]
2	Front ACR [203F]
3	Rear knock sensor [316]
4	Rear ACR [203R]
5	Rear injector [85]
6	TMAP [80]
7	Ignition coil [83]
8	Throttle control [211]
9	Front injector [84]

Figure 13. Engine

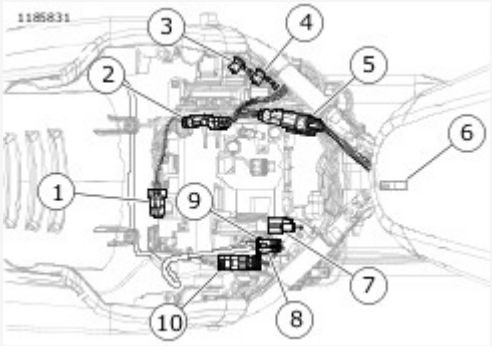

View interactive image

1	Purge solenoid [95]
2	Engine harness [145]
3	GND 1
4	GND 2

5	Backbone harness interconnect [327]
6	Engine harness interconnect [328]
7	Security antenna [209]
8	Left rear lighting [19]
9	Right rear lighting [18]
10	Tail lamp [40]

Figure 14. Under Seat

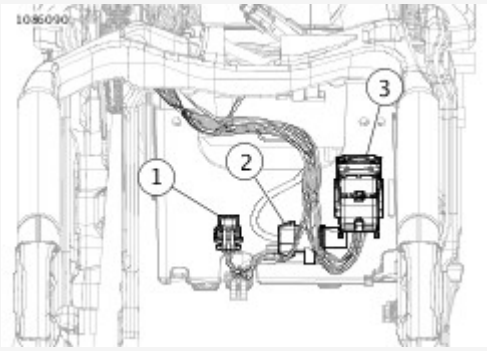

View interactive image

1	Security siren [142]
2	BCM power [259]
3	BCM [242]

Figure 15. Front of Rear Tire

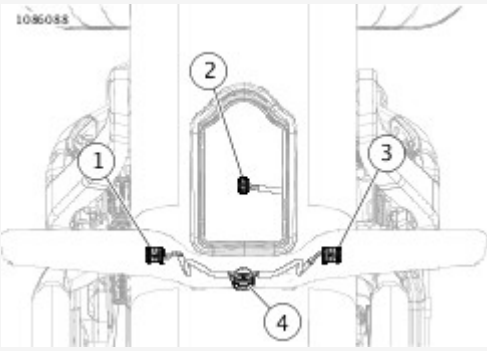

View interactive image

1	Left rear turn [18-2]
2	Stop/tail lamp [40-2]
3	Right rear turn [19-2]

4	Light bar interconnect [331]

Figure 16. Rear Lighting: FLDE

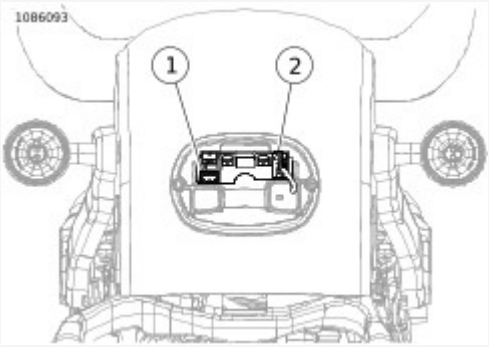

View interactive image

1	Left turn lamp
2	Tail lamp [93]
3	Stop lamp [94]
4	Right turn lamp

Figure 17. Rear Lighting: FLHC, FXLR

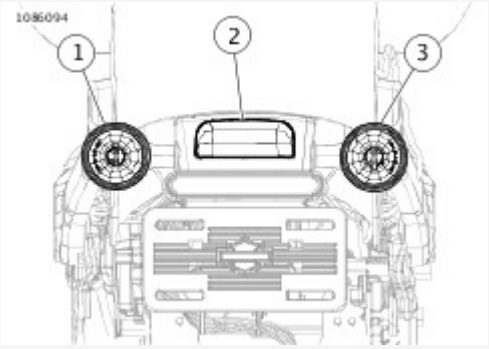

View interactive image

1	Left stop/turn lamp
2	License plate lamp
3	Right stop/turn lamp

Figure 18. Rear Lighting: FLSL, FLSB

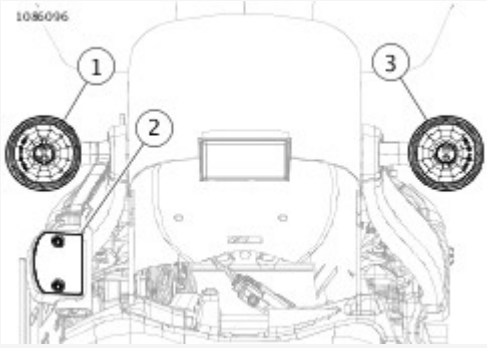

View interactive image

1	Left stop/turn lamp
2	License plate lamp
3	Right stop/turn lamp

Figure 19. Rear Lighting: FLFB/S, FXBB, FXBR/S, FXFB

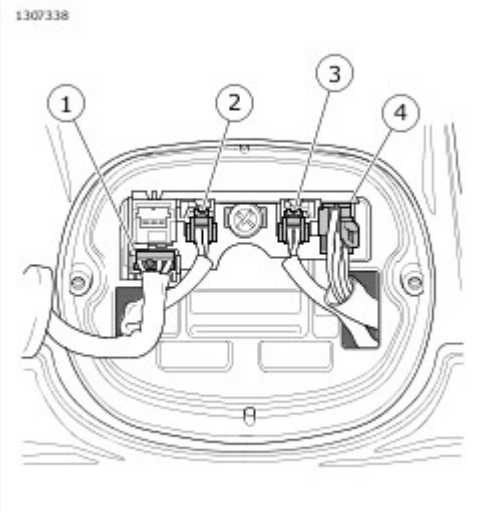

View interactive image

1	Tail lamp [93]
2	Left rear turn signal [19]
3	Right rear turn signal [18]
4	Rear light harness in circuit board [94]

Figure 20. Rear Lighting: FLHC/S

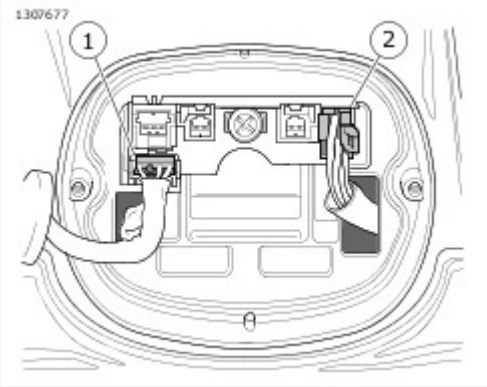

View interactive image

1	Tail lamp [93]
2	Rear light harness in circuit board [94]

Figure 21. Rear Lighting: FXLR

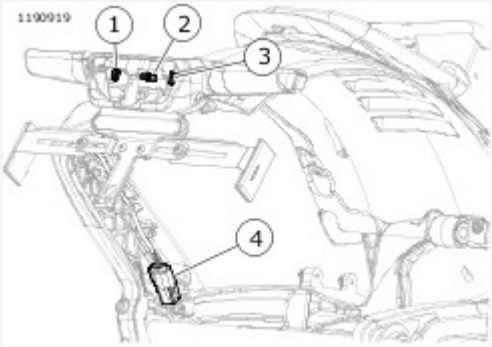

View interactive image

1	Left rear turn [19]
2	Stop, tail, turn, LP lamp [40-2]
3	Right rear turn [18]
4	Rear light bar interconnect [331]

Figure 22. Rear Lights (FXDRS)

Special Tools

Description	Part Number	Qty.
SNAP-ON TERMINAL PICK	GA500A	1

The Bosch Compact 1.1M style connector is typically found on ACR, MAP or TMAP sensors.

Separating Connector

Snap back the secondary lock. Press on the latch while pulling the connector from the sensor.

Mating Connector

1. Align the connector housings.
2. Press the housings together until the locking tab snaps into place.

Terminal Removal

1. See Figure 1. Slide the locking bar off the terminal housing.
2. Insert the smallest pins of the SNAP-ON TERMINAL PICK (Part Number:GA500A) into the gaps on each side of the terminal to compress the tangs on each side of the terminal.
3. Gently pull on the wire to remove the terminal.

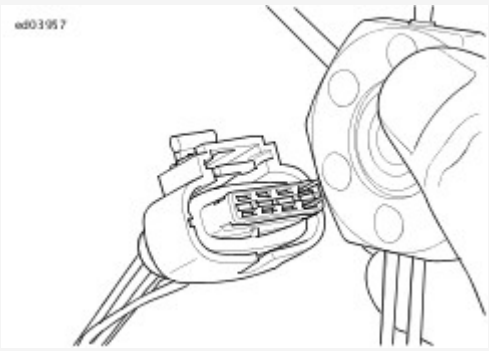

View interactive image

Figure 1. Terminal Removal: Bosch Compact 1.1M Connector

Installing Terminal

1. See Figure 2. Use a hobby knife to bend the tangs on each side of the terminal outward.
2. Align terminal to connector. Press terminal into connector until it snaps.

NOTE

The teeth on the locking bar face down.

3. Slide the locking bar onto the connector.

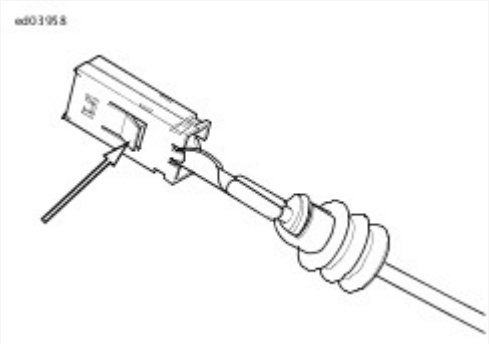

View interactive image

Figure 2. Tangs: Bosch Compact 1.1M Terminal

Replacement and Repair

The terminals and connector assemblies are not repairable. Discard and replace any defective or damaged terminals or connector assemblies. DO NOT re-use a terminal by removing the wire.

Special Tools

Description	Part Number	Qty.
TERMINAL EXTRACTOR	B-50085	1
PACKARD TERMINAL CRIMP TOOL	HD-38125-6	1

Delphi GT 150 connectors are typically used on fuel injectors, ignition coil and VSS. The GT 280 sealed connectors are used to connect to the fuel pump and sender.

See Figure 1. The plug assembly consists of housing with connector cavities, terminals, secondary lock, wire seals, safety lock, mating seal and primary lock.

NOTE

Use PACKARD TERMINAL CRIMP TOOL (Part Number:HD-38125-6) for Delphi GT sealed terminal crimping. Refer to Bosch tool instruction sheet for crimping instructions.

Separating Connector

See Figure 2. Press connector release (A), separate the two halves (B).

Mating Connector

Push the halves of connector together until external latch(es) engage.

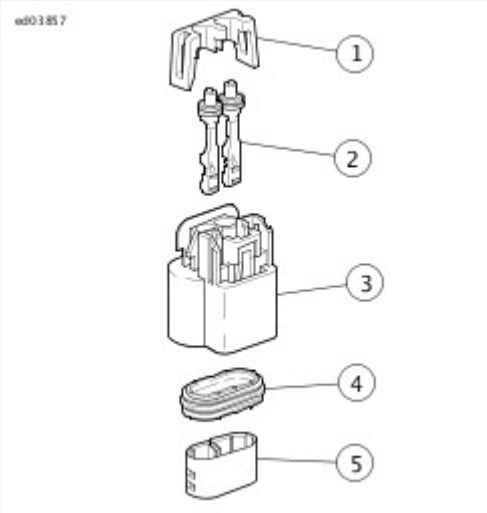

View interactive image

1	Secondary lock
2	GT 280 female terminals
3	Connector housing 2-way
4	Seal

5	Primary lock

Figure 1. Exploded View

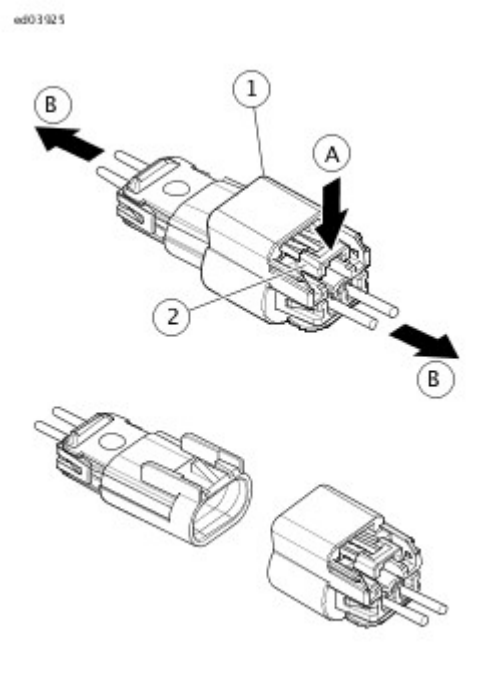

View interactive image

1	Connector housing
2	Connector release

Figure 2. Disconnect

Terminal Removal

1. See Figure 3. Using TERMINAL EXTRACTOR (Part Number:B-50085), completely remove the primary lock.
2. Release the two locks and remove the secondary lock.
3. From the front of the cavity, locate the terminal lock. Insert the removal tool straight into the cavity, deflect the terminal lock and release the terminal. Gently pull on the wire to remove terminal from the connector.

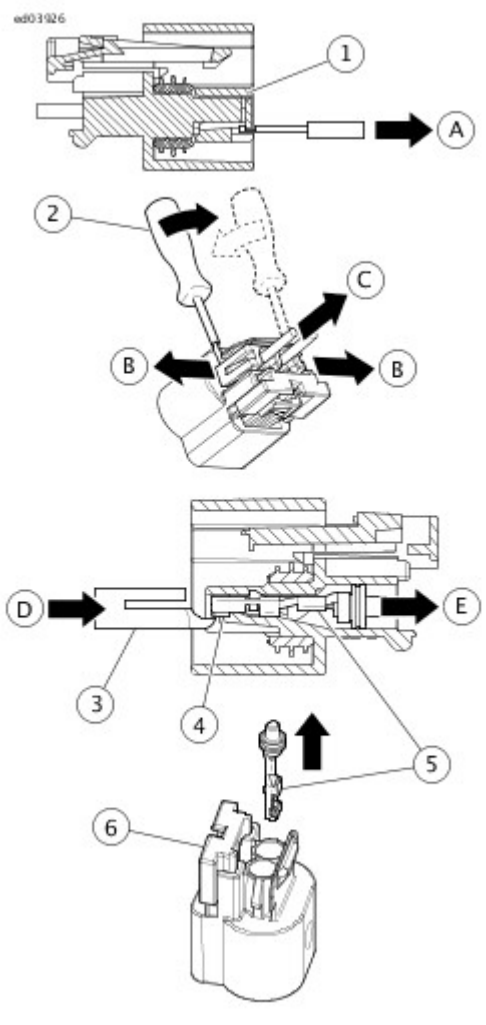

View interactive image

1	Primary lock
2	Removing secondary lock
3	Removal tool
4	Terminal lock
5	Terminal
6	Connector housing

Figure 3. Terminal Removal

Installing Terminals

1. See **Figure 4**. Insert the primary lock into the outer most position on the connector.

NOTE

Proper orientation of terminal required.

2. Insert terminals into connector housing.
3. Insert secondary lock onto cavity until locked.
4. Install primary lock until it is locked in position.

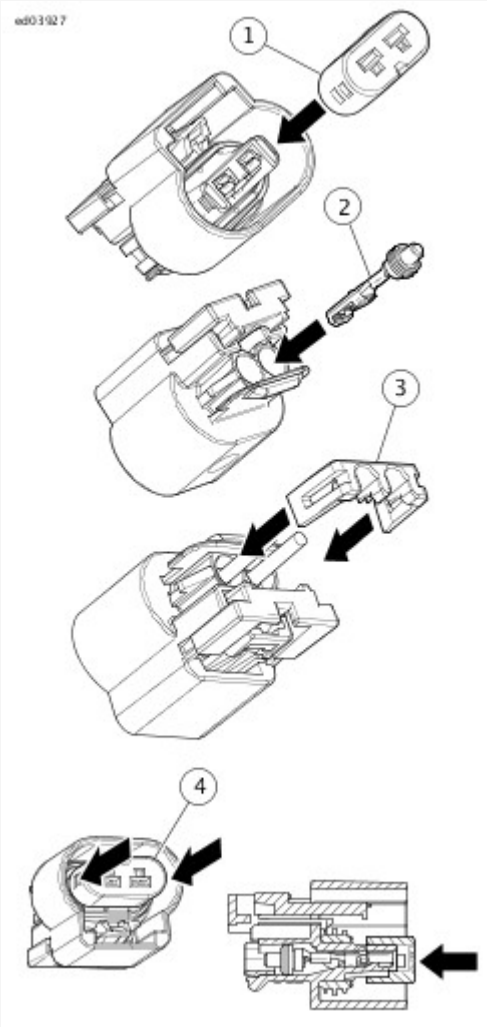

View interactive image

1	Primary lock
2	Terminal
3	Secondary lock
4	Primary lock

Figure 4. Terminal Installation

Replacement and Repair

The terminals and connector assemblies are not repairable. Discard and replace any defective or damaged terminals or connector assemblies. Do not re-use a terminal by removing the wire.

Special Tools

Description	Part Number	Qty.
PACKARD TERMINAL CRIMP TOOL	HD-38125-6	1
PACKARD TERMINAL CRIMPER	HD-38125-7	1

There are two types of connectors in this series:

- Pull-to-Seat
- Push-to-Seat

NOTE

- Use **PACKARD TERMINAL CRIMP TOOL (Part Number:HD-38125-6)** for push-to-seat Delphi Metri-Pack terminal crimping.
- Use **PACKARD TERMINAL CRIMPER (Part Number:HD-38125-7)** for pull-to-seat Delphi Metri-Pack terminal crimping.

Refer to Bosch tool instruction sheet for crimping instructions.

Separating Connector

Pry up on the external latch slightly and separate the connector.

Mating Connector

Push the halves of the connector together.

Terminal Removal Push-to-Seat

NOTE

- The same process is followed for both the male and female ends of the push to seat connectors.
- For best results, free one side of the secondary lock first and then release the other side.

1. See **Figure 1**. Remove secondary lock from wire end of connector.
2. Find the locking tang in the mating end of the connector.

NOTE

- The tangs are always positioned in the middle of the cavity on the same side as the external latch.
- There is a small opening for the pin.

3. Gently insert a small diameter straight pin into the cavity about 3.2 mm (⅛ in).

NOTE

The click is the sound of the tang returning to the locked position as it slips from the point of the pin.

4. Pick at the tang until the clicking stops and the pin seems to slide in deeper. This indicates the tang is pressed in.
5. Pull on the lead to draw the terminal out the wire end.

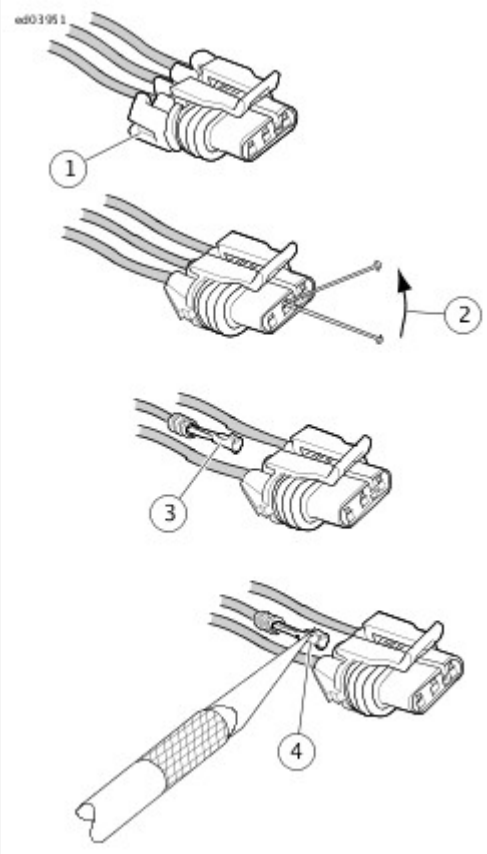

View interactive image

1	Remove wire lock
2	Pivot pin to release tang
3	Pull to remove
4	Raise tang to install

Figure 1. Removing Delphi Metri-Pack Sealed Connector: Push-to-Seat

Terminal Removal Pull-to-Seat

NOTE

The tangs are always positioned in the middle of the cavity. The tangs are on the same side as the external latch.

1. See Figure 2. Find the locking tang in the mating end of the connector.

NOTE

Stay between the terminal and the cavity wall and pivot the end of the pin toward the terminal body.

2. Gently insert a small diameter straight pin into the cavity about 3.2 mm (⅛ in).

NOTE

The click is the sound of the tang returning to the locked position as it slips from the point of the pin.

3. When a click is heard, remove the pin and repeat the procedure.

NOTE

After repeated terminal extractions, the click may not be heard, but pivot the pin as if the click was heard at least three times.

4. Pick at the tang until the clicking stops and the pin seems to slide in deeper. This indicates the tang is pressed in.
5. Push on the lead to extract the terminal from the mating end of the connector.

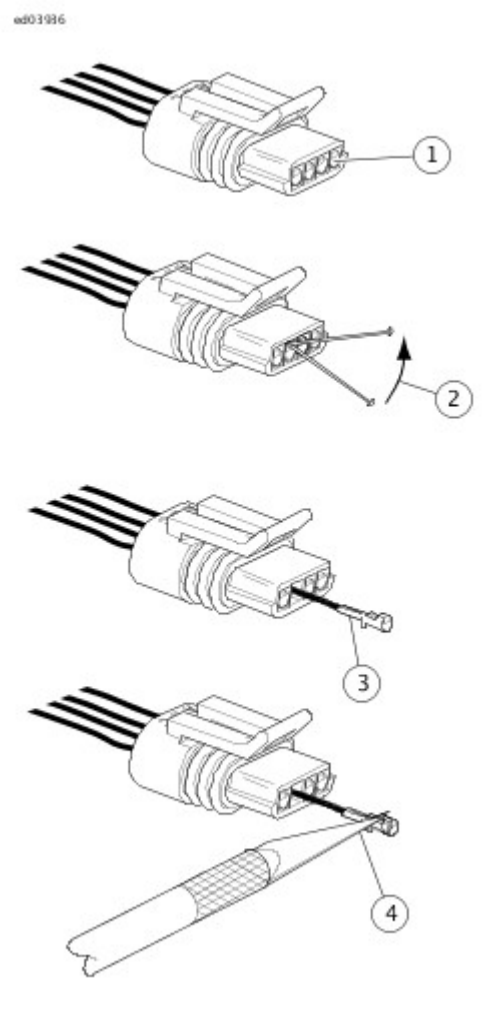

View interactive image

1	Locate tang in cavity
2	Pivot pin to release tang
3	Push to remove
4	Raise tang to install

Figure 2. Delphi 150.2 Metri-Pack Sealed Connector: Pull-to-Seat

Installing Terminal Push-to-Seat

1. See Figure 3. Plug terminals into connector assembly.
2. After all leads are plugged, install secondary lock to connector.
   a. Hold connector as shown and install secondary lock.
   b. Position secondary locks with corresponding grooves and verify one lead per cavity. Apply pressure with fingers until secondary lock snaps into place.

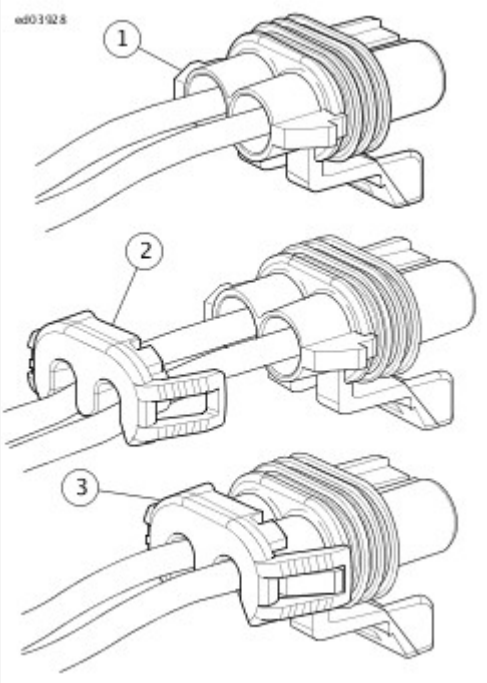

View interactive image

1	Insert terminals into connector
2	Install secondary lock
3	Locked

Figure 3. Insert Terminals Push-to-Seat

Installing Terminal Pull-to-Seat

NOTE

Leads must be blunt cut for this operation.

1. See Figure 4. Push wire leads through cable seal at least 203 mm (8 in).
2. Strip each wire lead to the required length for the terminal being applied.
3. Crimp terminals on wire ends
4. Align the terminals with the locating tabs in the cavity and pull wires back through connector to install the terminal.
5. Verify terminal is fully seated in the terminal cavity.

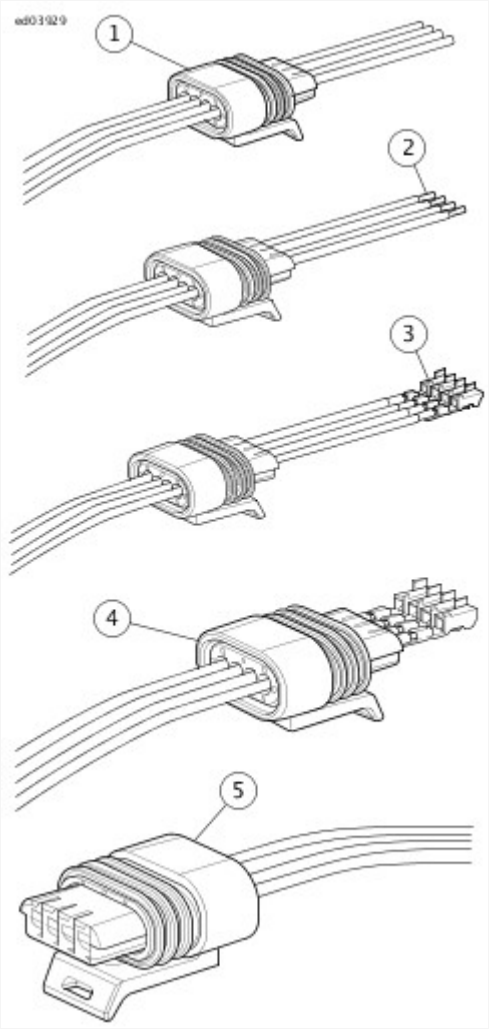

View interactive image

1	Push wire leads through cable seal
2	Strip each wire lead
3	Crimp terminals on wire ends
4	Pull wires back through connector
5	Verify terminal is fully seated

Figure 4. Inserting Terminal Pull-to-Seat

Replacement and Repair

The terminals and connector assemblies are not repairable. Discard and replace any defective or damaged terminals or connector assemblies. Do not re-use a terminal by removing the wire.

Special Tools

Description	Part Number	Qty.
PACKARD MICRO-64 TERMINAL REMOVER	HD-45928	1
PACKARD MICRO-64 TERMINAL CRIMPER	HD-45929	1

Delphi Micro 64 Sealed connectors are frequently found on speedometers and tachometers.

NOTE

Use **PACKARD MICRO-64 TERMINAL CRIMPER (Part Number:HD-45929)** for Delphi Micro 64 terminal crimping. Refer to Bosch tool instruction sheet for crimping instructions.

Separating Connector

Bend back the external latches slightly and separate the connector.

Mating Connector

Align the terminals and press the connector together until the latch snaps.

Terminal Removal

1. See **Figure 1**. Locate the head of the secondary lock on one side of the connector housing.
2. Insert the blade of a small screwdriver between the center ear of the lock and the connector housing and gently pry out lock. When partially removed, pull lock from connector housing.
3. Locate pin hole between terminals on mating end of connector.

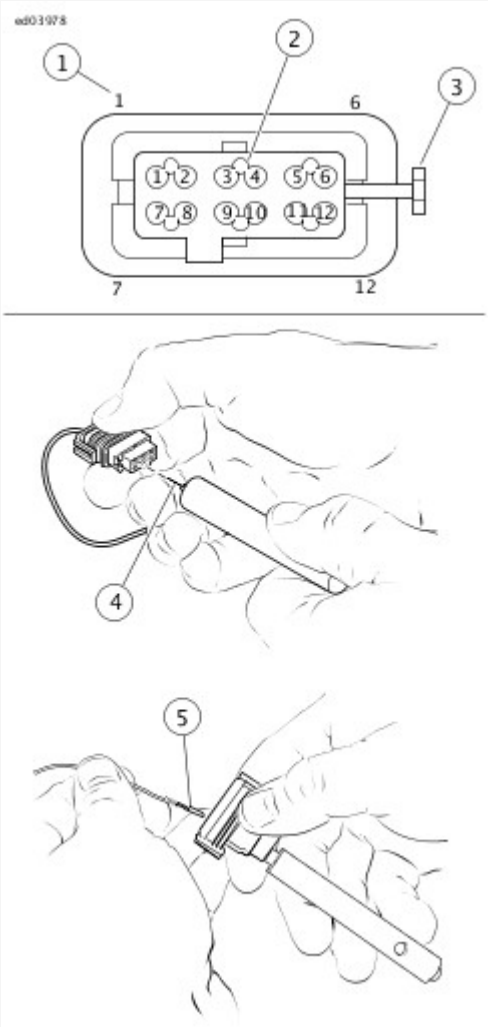

View interactive image

1	Stamped number
2	Pin hole
3	Secondary lock
4	Insert terminal remover
5	Remove terminal

Figure 1. Terminal Removal

4. Obtain the **PACKARD MICRO-64 TERMINAL REMOVER (Part Number:HD-45928)**.
5. Push the adjacent terminals all the way into the connector housing and then insert tool into hole until it bottoms.
6. Leaving the tool installed, gently tug on wires to pull either one or both terminals from wire end of connector. Remove tool.

Installing Terminal

1. Insert terminal into its respective numbered cavity on wire end of connector. No special orientation of the terminal is necessary.

NOTE

For wire location purposes, the corners of the connector are stamped with the numbers 1, 6, 7 and 12, representing terminals 1-6 on one side, and 7-12 on the other.

2. Bottom the terminal in the cavity and then gently tug on the wire to verify that it is locked in place.

NOTE

Once removed, the terminal may not lock in place when first installed. Until the lock engages, move the terminal back and forth slightly while wiggling the lead.

3. Since the terminal remover tool releases two terminals simultaneously, repeat step 2 on the adjacent terminal even if it was not pulled from the connector housing.
4. With the center ear on the head of the secondary lock facing the mating end of the connector, push secondary lock in until head is flush with the connector housing.

Replacement and Repair

The terminals and connector assemblies are not repairable. Discard and replace any defective or damaged terminals or connector assemblies. Do not re-use a terminal by removing the wire.

Special Tools

Description	Part Number	Qty.
DEUTSCH CRIMPER	HD-39965-a	1
DEUTSCH CONNECTOR SERVICE KIT	HD-41475	1
FLAT BLADE L-HOOK	HD-41475-100	1
ELECTRICAL CRIMPER TOOL	HD-42879	1

A **DEUTSCH CONNECTOR SERVICE KIT (Part Number:HD-41475)** contains a selection of seals and seal plugs, locking wedges, attachment clips and terminals. Also included is a **FLAT BLADE L-HOOK (Part Number:HD-41475-100)** used to remove locking wedges, compartmented storage box and carrying case.

NOTE

- Use the **DEUTSCH CRIMPER (Part Number:HD-39965-a)** for non-solid barrel terminal crimping.
- Use the **ELECTRICAL CRIMPER TOOL (Part Number:HD-42879)** for solid barrel terminal crimping.

Refer to Bosch tool instruction sheet for crimping instructions.

Separating Connector

See **Figure 1**. To separate the connector halves, press the external latch(es) on the connector while rocking the connector halves, and pull.

NOTE

- Six-place and smaller Deutsch connectors have one latch on the connector.
- Eight- and twelve-place connectors have a latch on each side. Simultaneously press both latches to separate the connector.

Mating Connector

1. Align the connectors to match the wire lead colors.
   a. **For One External Latch:** To join the halves, align the latch on the socket side with the latch cover on the pin side.
   b. **For Two External Latches:** Align the tabs on the connector halves.

NOTE

For Two External Latches: If latches do not click (latch), press on one side of the connector until that latch engages then press on the opposite side to engage the other latch.

2. Insert the two halves together until it locks into place.

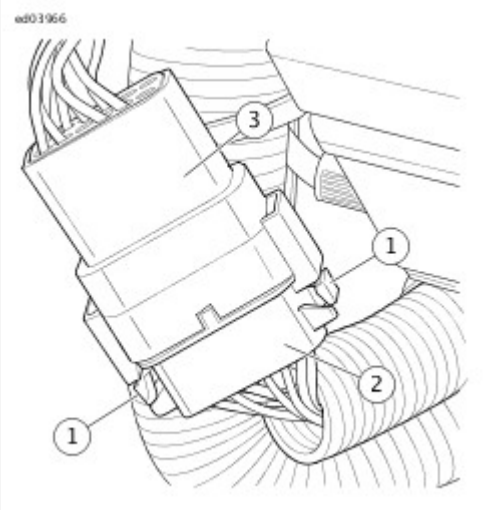

View interactive image

1	External latch
2	Socket housing
3	Pin housing

Figure 1. Deutsch DT Sealed Connector

Terminal Removal

1. See **Figure 2**. Remove wedgelock using needlenose pliers or removal tool.
2. To remove the terminals, gently pull wire backwards, while at the same time releasing the locking finger by moving it away from the terminal with a screwdriver.
3. Hold the rear seal in place when pulling terminal/wire out, as removing the terminal may displace the seal.

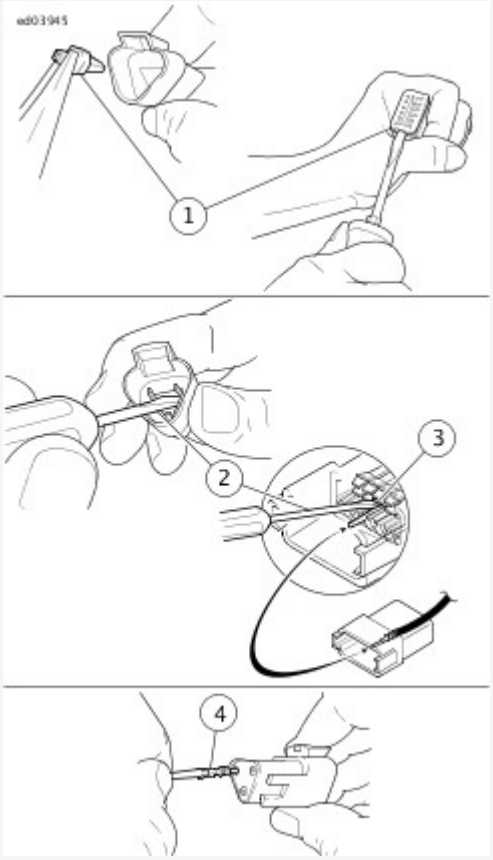

View interactive image

1	Remove wedgelock
2	Releasing locking finger
3	Locking finger
4	Remove terminal

Figure 2. Terminal Removal

Installing Terminal

NOTE

The receptacle is shown. Use the same procedure for plug.

1. See **Figure 3**. Grasp terminal approximately 25.4 mm (1 in) behind the terminal barrel.
2. Push terminal straight into connector grommet until a click is felt.
3. Gently pull on the wire to confirm that it is properly locked in place.
4. Once all terminals are in place, insert wedgelock. The wedgelock will snap into place.

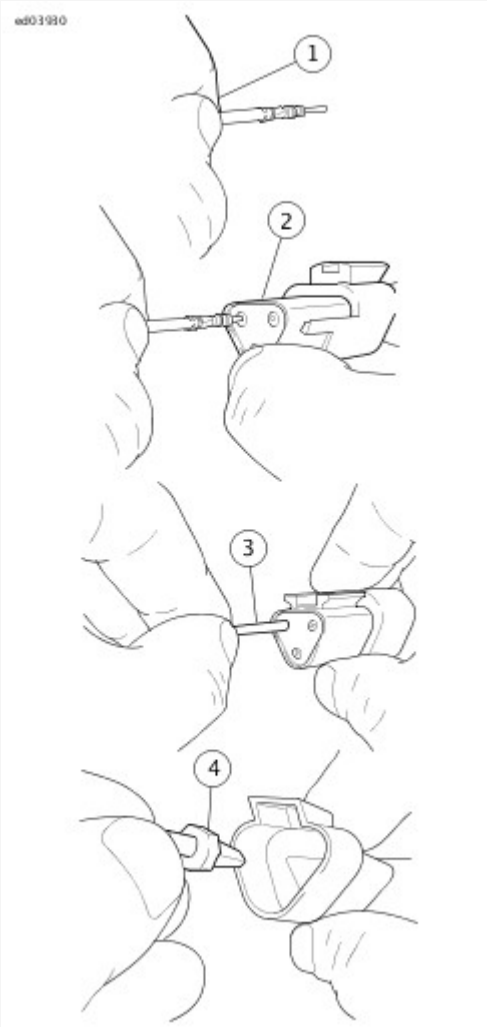

View interactive image

1	Grasp terminal
2	Hold connector
3	Insert terminal
4	Insert wedgelock

Figure 3. Inserting Terminals

Replacement and Repair

The terminals and connector assemblies are not repairable. Discard and replace any defective or damaged terminals or connector assemblies. Do not re-use a terminal by removing the wire.

Special Tools

Description	Part Number	Qty.
TERMINAL EXTRACTOR	B-50085	1
HAND CRIMP FRAME	HD-50120-2	1
JAE DIE	HD-50120-6	1

The plug assembly consists of a wire seal (part of housing), housing and two terminals.

NOTE

Use **HAND CRIMP FRAME (Part Number:HD-50120-2)** with **JAE DIE (Part Number:HD-50120-6)** for JAE MX19 series terminal crimping. Refer to Bosch tool instruction sheet for crimping instructions.

Separating Connector

See **Figure 1**. Press the latch while pulling the connector halves apart.

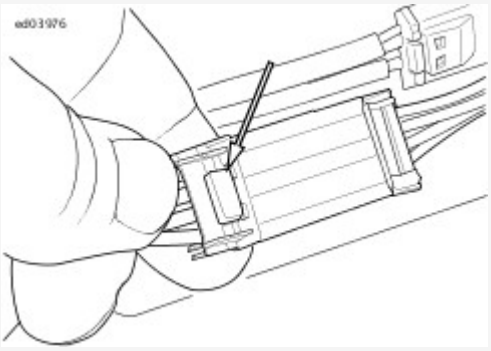

View interactive image

Figure 1. Release Button

Mating Connector

Align the terminals and press the connectors together until the latch snaps.

Terminal Removal

1. Modify a **TERMINAL EXTRACTOR (Part Number:B-50085)** by filing the front edge to 45 degrees.
2. See **Figure 2**. Insert the extractor into the opening above the terminal and press the plastic molding up and out of the way.
3. Pull the wire lead and terminal out of the back of the connector.

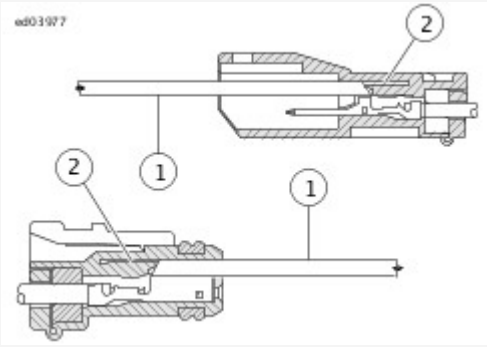

View interactive image

1	Terminal extractor
2	Connector

Figure 2. Terminal Removal

Installing Terminal

1. Inspect the connector housing and replace if necessary.
2. Orient the terminal to the housing. Push terminal into housing until it clicks into place.

Replacement and Repair

The terminals and connector assemblies are not repairable. Discard and replace any defective or damaged terminals or connector assemblies. Do not re-use a terminal by removing the wire.

Special Tools

Description	Part Number	Qty.
TERMINAL EXTRACTOR	B-50085	1
DIE SET	HD-50120-11	1
HAND CRIMP FRAME	HD-50120-2	1

The plug assembly consists of a wire seal (part of housing), housing, yellow secondary, two terminals, and one red mating seal. The mating seal provides a tight closure for mated connectors.

NOTE

Use **HAND CRIMP FRAME (Part Number:HD-50120-2)** with **DIE SET (Part Number:HD-50120-11)** for JST JWPF series terminal crimping. Refer to Bosch tool instruction sheet for crimping instructions.

Separating Connector

See **Figure 1**. Press locking lever on female housing. Pull connector halves apart.

Mating Connector

1. Align the connectors so the latches line up.
2. Press together until locked.

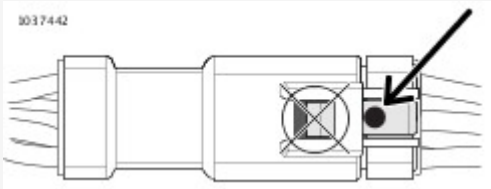

View interactive image

Figure 1. Locking Lever: JST JWPF Sealed Connector

Terminal Removal

1. See **Figure 2**. Locate large openings on the front of the connector housing.
2. Insert **TERMINAL EXTRACTOR (Part Number:B-50085)** into large openings and release retention finger that locks terminal in place.
3. Remove terminal.

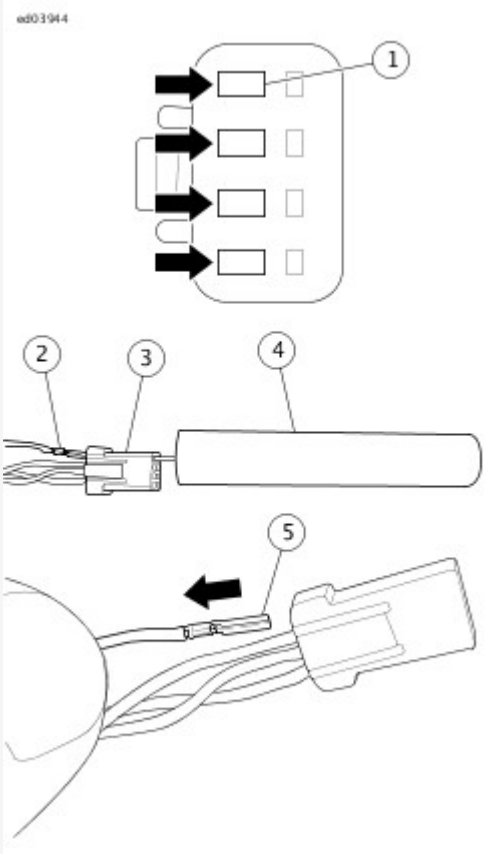

View interactive image

1	Openings for removal tool
2	Terminal
3	Connector housing
4	Terminal extractor
5	Removing terminal

Figure 2. Terminal Removal

Installing Terminal

1. Inspect connector housing and replace if necessary.
2. Orient the terminal to the housing. Push terminal into housing until it clicks into place.

Replacement and Repair

The terminals and connector assemblies are not repairable. Discard and replace any defective or damaged terminals or connector assemblies. Do not re-use a terminal by removing the wire.

Special Tools

Description	Part Number	Qty.
TERMINAL EXTRACTOR	B-50085	1
HAND CRIMP FRAME	HD-50120-2	1

NOTE

Use **HAND CRIMP FRAME (Part Number:HD-50120-2)** with HD-50120-12 (DIE SET) for Kostal MLK 1.2 series terminal crimping. Refer to Bosch tool instruction sheet for crimping instructions.

Separating Connector

1. See **Figure 1**. Lift the locking clip up in the unlocked position.
2. Press the locking clip in and release.
3. Pull and separate the two halves.

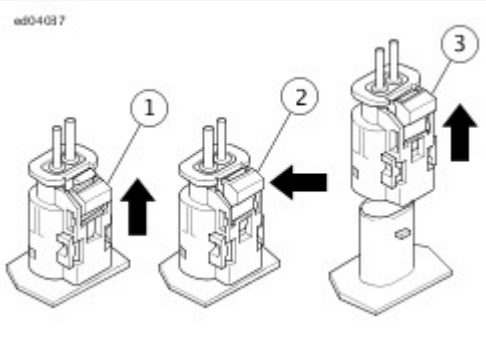

View interactive image

1	Locking clip in locked position
2	Lift locking clip to the unlocked position
3	Press locking clip and lift connector to separate

Figure 1. Separating Connector

Mating Connector

1. See **Figure 2**. Push the halves of connector together until they click.
2. Push the locking clip down into locked position.

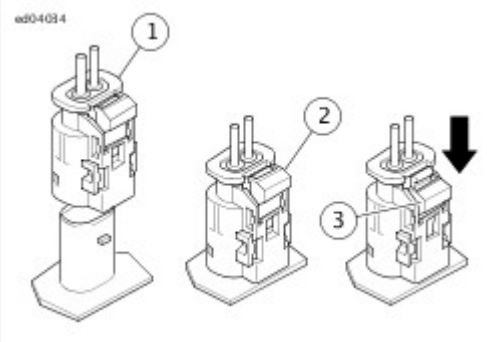

View interactive image

1	Push connectors together
2	Listen for click
3	Push safety lock down

Figure 2. Mating Connector

Terminal Removal

1. See Figure 3. Using a screwdriver, insert in hole in side of protective Housing and release the secondary lock.
2. Insert TERMINAL EXTRACTOR (Part Number:B-50085) into opening over terminal.
3. The terminal can be removed by pulling on the wire while simultaneously applying light pressure to disengage the primary lock.

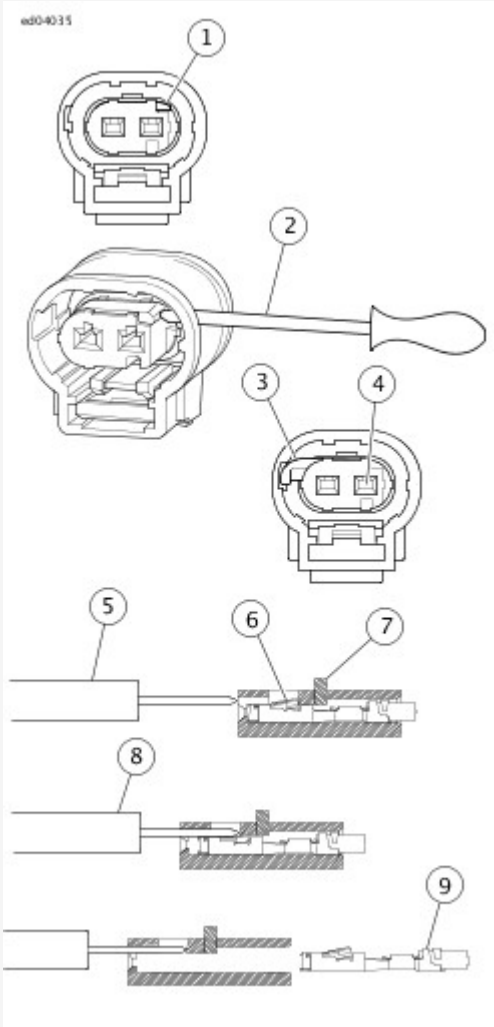

View interactive image

1	Secondary lock in locked position
2	Insert screwdriver and release secondary lock
3	Secondary lock in unlocked position
4	Opening over terminal
5	Terminal extractor
6	Primary lock
7	Secondary lock
8	Push terminal extractor into opening over terminal
9	Remove terminal

Figure 3. Terminal Removal

Installing Terminal

NOTE

Proper orientation of terminal required.

1. See Figure 4. Insert female terminals into receptacle connector until an audible click is heard or lock is felt
2. Using a screwdriver, insert in hole in side of protective Housing and using a slight force push secondary lock into locked position.

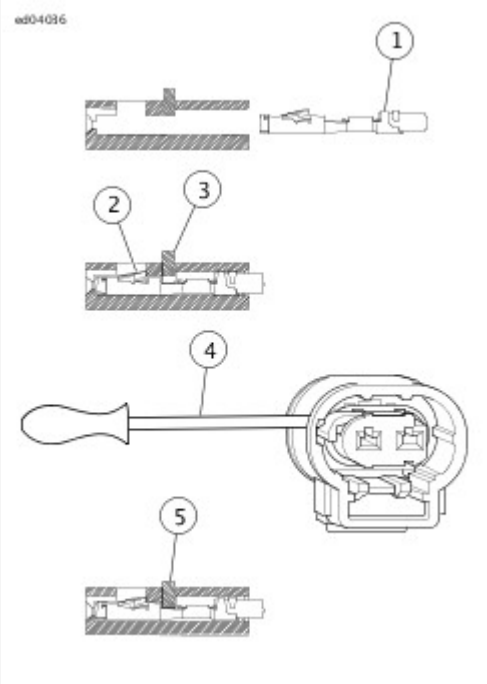

View interactive image

1	Terminal
2	Primary lock
3	Secondary lock in unlocked position
4	Insert screwdriver and push secondary lock into locked position
5	Secondary lock in locked position

Figure 4. Installing Terminal

Replacement and Repair

The terminals and connector assemblies are not repairable. Discard and replace any defective or damaged terminals or connector assemblies. Do not re-use a terminal by removing the wire.

Special Tools

Description	Part Number	Qty.
HAND CRIMP FRAME	HD-50120-2	1
JAE DIE	HD-50120-3	1
JAE DIE	HD-50120-4	1
0.6 MM TERMINAL EXTACTOR TOOL	HD-50423	1
1.5 MM TERMINAL EXTRACTOR TOOL	HD-50424	1

NOTE

Use HAND CRIMP FRAME (Part Number:HD-50120-2) with JAE DIE (Part Number:HD-50120-3) for 18-16 gauge or JAE DIE (Part Number:HD-50120-4) for 20-18 gauge Molex CMC series terminal crimping. Refer to Bosch tool instruction sheet for crimping instructions.

Separating Connector

See Figure 1. Press the catch and rotate the lever arm down.

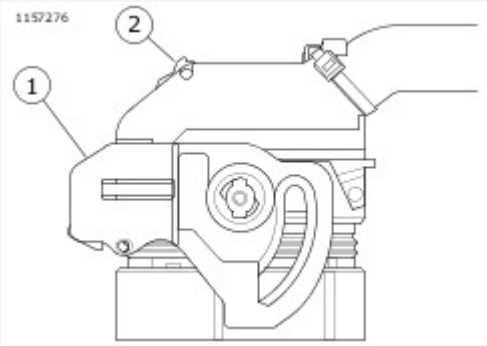

View interactive image

1	Lever arm
2	Catch

Figure 1. Release

Mating Connector

1. Align the connector.
2. Rotate the lever arm up until the catch clicks in place.

Terminal Removal

1. With the lever arm open, cut the cable strap around the wire bundle.
2. See **Figure 2**. Open a wire cap latch with a small screwdriver.
3. Maintain pressure on the cap and open the opposite latch with the screwdriver.
4. Slide the cap off.
5. Use the screwdriver to open the secondary lock. Pull the locking bar all the way out.
6. Locate the wire lead cavity by the alpha-numeric coordinates.
7. Identify the size of the terminal and select either the CMC extractor **0.6 MM TERMINAL EXTACTOR TOOL (Part Number:HD-50423)** or the **1.5 MM TERMINAL EXTRACTOR TOOL (Part Number:HD-50424)**.
8. Insert the pins of the CMC extractor tool into the access slots of the terminal cavity and retract the lead and terminal.

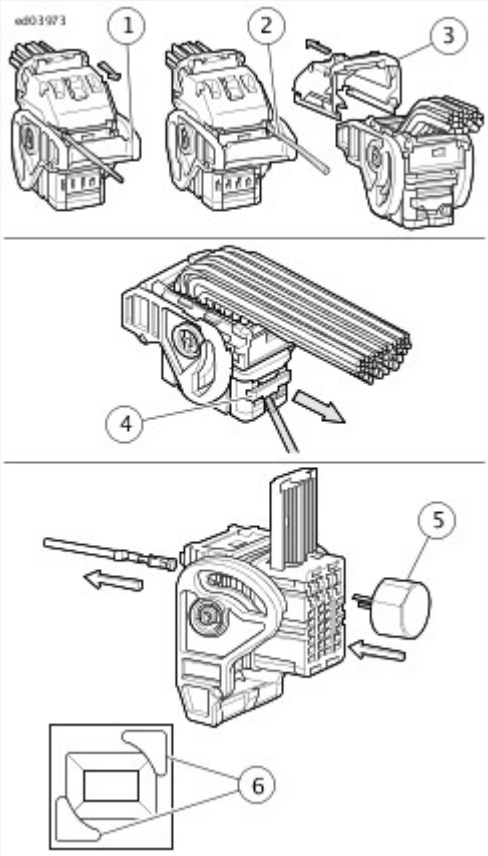

View interactive image

1	Press latch
2	Press cap and latch
3	Remove wire lead cap
4	Remove secondary lock
5	Extractor tool
6	Access slots

Figure 2. Terminal Removal

Installing Terminal

1. Orient the terminal to the housing cavity. Snap the terminal in place.
2. Slide the cap over the lead bundle. Snap the cap in place.
3. Install a cable strap through the guide and around the lead bundle.

Replacement and Repair

The terminals and connector assemblies are not repairable. Discard and replace any defective or damaged terminals or connector assemblies. Do not re-use a terminal by removing the wire.

Special Tools

Description	Part Number	Qty.
MOLEX ELECTRICAL CONNECTOR TERMINAL REMOVER	HD-48114	1
ELECTRICAL CRIMP TOOL	HD-48119	1
DIE SET	HD-50120-11	1
HAND CRIMP FRAME	HD-50120-2	1

NOTE

- Use **ELECTRICAL CRIMP TOOL (Part Number:HD-48119)** for Molex MX150 terminal crimping.
- Use **HAND CRIMP FRAME (Part Number:HD-50120-2)** with **DIE SET (Part Number:HD-50120-11)** for Molex MX64 series terminal crimping.

Refer to Bosch tool instruction sheet for crimping instructions.

Separating Connector

See **Figure 1**. Press the latch while pulling the connector halves apart.

Mating Connector

1. Align the connectors so the latches line up.
2. Press together until locked.

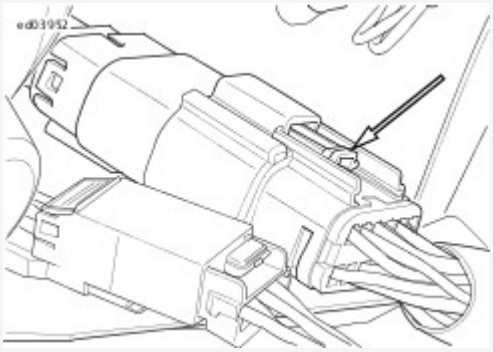

View interactive image

Figure 1. Molex MX 150 Sealed Connector Latch

Terminal Removal (Male Terminals)

NOTE

- The secondary lock should never be fully removed from the connector. Excessive force may damage the secondary lock.
- Do not apply any lateral force. This may damage the tool or the locking finger.
- Excessive force can damage the lock finger.
- Do not insert the service tool at an angle. This may cause damage to the terminal.
- Do not insert the removal tool into the terminal opening.

1. See **Figure 2**. Insert a small pair of needle nose pliers in the removal holes.
2. Pull back gently 5 mm (0 in) until the secondary lock is unlocked.
3. Using the **MOLEX ELECTRICAL CONNECTOR TERMINAL REMOVER (Part Number:HD-48114)**, insert the tip into the terminal service ports adjacent to the terminal cavity to be removed.
4. Apply downward pressure to release the lock and remove the wire. If the terminal resists, the removal tool may not be fully engaged. Verify that it has fully disengaged the lock.

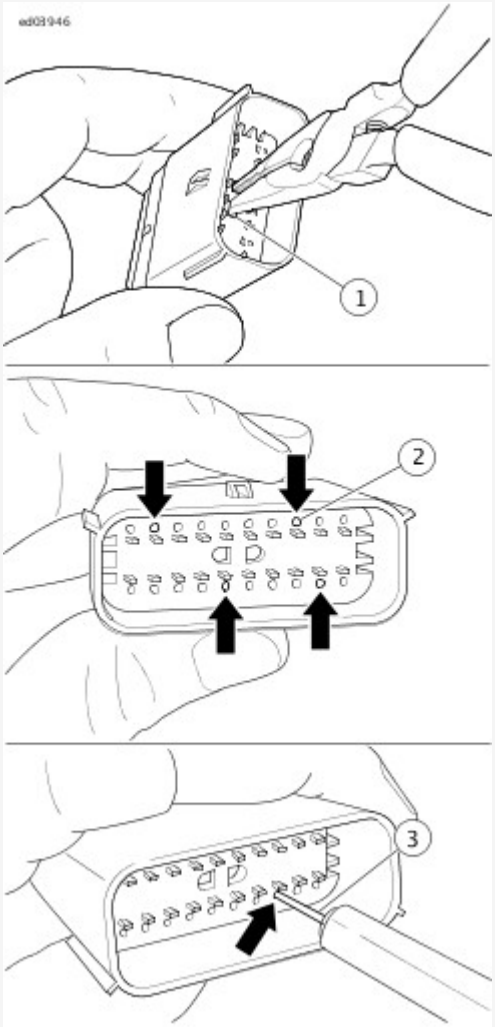

View interactive image

1	Pull up secondary lock
2	Service ports
3	Insert removal tool

Figure 2. Terminal Removal: Male

Terminal Removal (Female Terminals) MX150 Series

NOTE

- The secondary lock should never be fully removed from the connector housing. Excessive force may damage the secondary lock.
- Do not apply any lateral force. This may damage the tool or the locking finger.
- Excessive force can damage the lock finger.
- Do not insert the service tool at an angle. This may cause damage to the terminal.
- Do not insert the removal tool into the terminal opening.

1. See Figure 3. Insert a small screwdriver into the secondary lock release.
2. Using the housing as a pivot point gently pry out on the secondary lock to unlock.
3. Using the MOLEX ELECTRICAL CONNECTOR TERMINAL REMOVER (Part Number:HD-48114), insert the tip into the terminal service ports adjacent to the terminal cavity to be removed.
4. Apply downward pressure to release the lock and remove the wire. If the terminal resists, the removal tool may not be fully engaged. Verify that it has fully disengaged the lock.

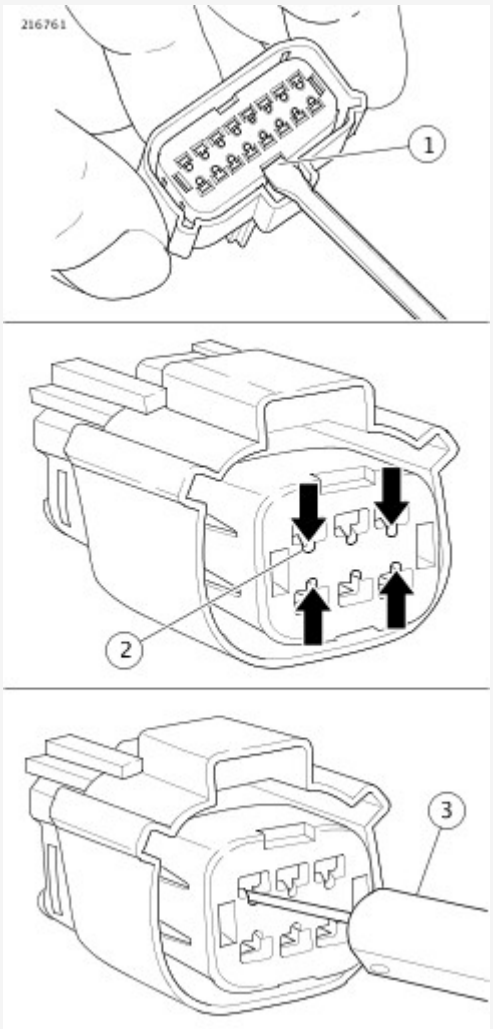

View interactive image

1	Pry up secondary lock
2	Service ports

3	Insert removal tool

Figure 3. Terminal Removal: Female

Terminal Removal (Female Terminals) MX64 Series

1. See Figure 4. Using a small blade screwdriver pry up on the secondary lock and remove.

NOTE

Do not use excessive force. Excessive force can damage the lock finger.

2. Using a small blade screwdriver, release the terminal lock. Gently pull on the wire to remove the terminal.

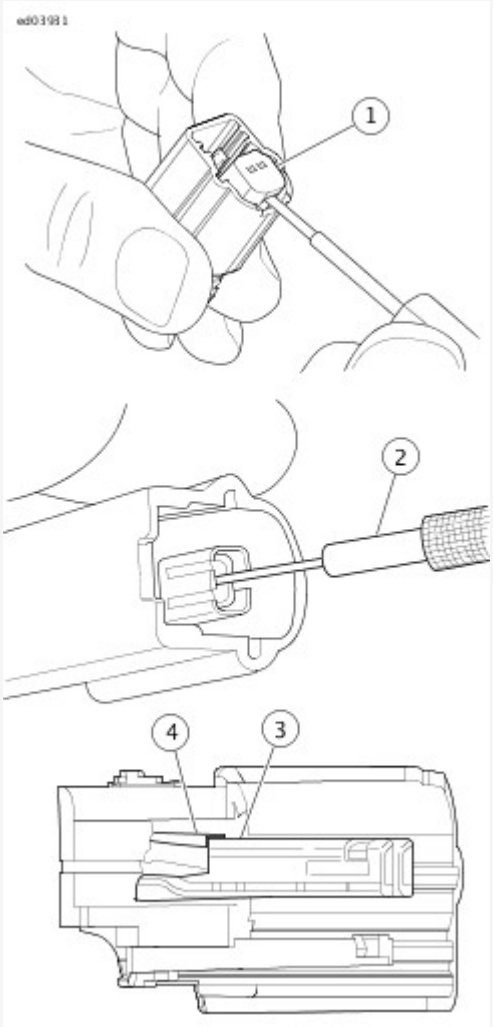

View interactive image

1	Remove secondary lock
2	1 mm pry tool
3	Pry point for terminal lock
4	Primary lock

Figure 4. Removing Terminals in MX64 Series Connector

Installing Terminal

1. See Figure 5. With secondary lock unlocked, align the terminal to rear of connector.
2. Insert the terminal until it stops and locks on the lock finger with an audible click.
3. See Figure 5.
    a. On the MX64, install and lock the secondary lock.
    b. On the MX150, push to lock the secondary lock.

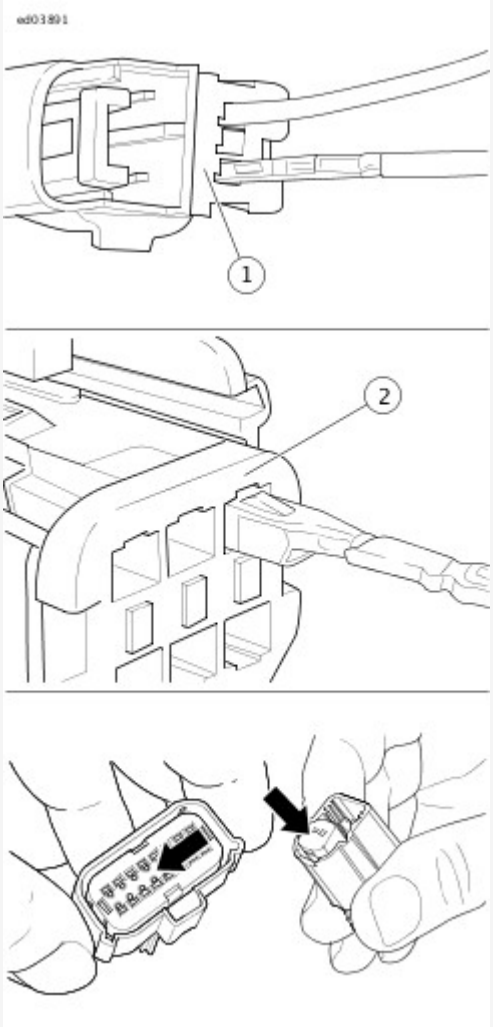

View interactive image

1	MX 64 series
2	MX 150 series

Figure 5. Terminal Installation

Replacement and Repair

The terminals and connector assemblies are not repairable. Discard and replace any defective or damaged terminals or connector assemblies. Do not re-use a terminal by removing the wire.

Special Tools

Description	Part Number	Qty.
ROBINAIR HEAT GUN	HD-25070	1
PACKARD CRIMPING TOOL	HD-38125-8	1
ULTRA TORCH UT-100	HD-39969	1
HEAT SHIELD ATTACHMENT	HD-41183	1

NOTE

Refer to Bosch tool instruction sheet for crimping instructions.

Splice connectors and several OEM ring terminal connectors use heat shrink covering to seal the connection.

Preparing Wire Leads

NOTE

When splicing adjacent wires, stagger the splices so the sealed splice connectors will not touch each other.

1. Using a shop gauge, identify the gauge of the wire.
2. Match the wire gauge to a sealed splice connector by color and part number. Refer to Table 1.
3. Strip insulation off the wire lead. Refer to Table 1.

Table 1. Sealed Splice Connectors

WIRE GAUGE	COLOR	PART NO.	STRIP LENGTH	
			IN	MM
18-20 (0.5-0.8 mm)	Red	70585-93	3/8	9.5
14-16 (1.0-2.0 mm)	Blue	70586-93	3/8	9.5
10-12 (3.0-5.0 mm)	Yellow	70587-93	3/8	9.5

NOTE

If any copper wire strands are cut off of the wire core, trim the end and strip the wire again in a larger gauge stripper.

Splicing Wire Leads

NOTE

The connector is crimped on one side and then the other.

1. See Figure 1. Open the PACKARD CRIMPING TOOL (Part Number:HD-38125-8) ratchet by squeezing the handles closed.
2. Match the connector color to the wire gauge crimp die in the jaws. Insert one end of the sealed connector.
3. Gently squeeze the handles until the connector is held in the jaws.
4. See Figure 2. Feed the stripped end of a wire into the connector until the wire stops inside the metal insert.
5. Squeeze the handles tightly closed to crimp the lead in the insert. The tool automatically opens when the crimping is complete.
6. Slide the connector to the other half of the metal insert. Insert the stripped wire lead until it stops. Crimp the lead in the insert.

WARNING

Be sure to follow manufacturer's instructions when using the UltraTorch UT-100 or any other radiant heating device. Failure to follow manufacturer's instructions can cause a fire, which could result in death or serious injury. (00335a)

- Avoid directing heat toward any electrical system component that is not being serviced.
- Always keep hands away from tool tip area and heat shrink attachment.

NOTE

It is acceptable for the splice to rest against the heat shrink tool attachment.

7. Use an ULTRA TORCH UT-100 (Part Number:HD-39969), or a ROBINAIR HEAT GUN (Part Number:HD-25070) with a HEAT SHIELD ATTACHMENT (Part Number:HD-41183), to heat the connector from the center of the crimp out to each end.

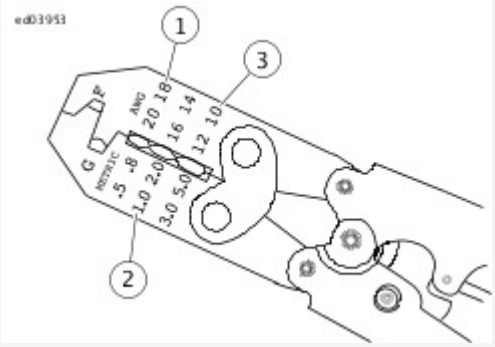

View interactive image

1	Red connector die
2	Blue connector die
3	Yellow connector die

Figure 1. Packard Crimping Tool (HD-38125-8)

Inspecting Seals

See Figure 2. Allow the splice to cool and inspect the seal. The insulation should appear smooth and cylindrical. Melted sealant will have extruded out the ends of the insulation.

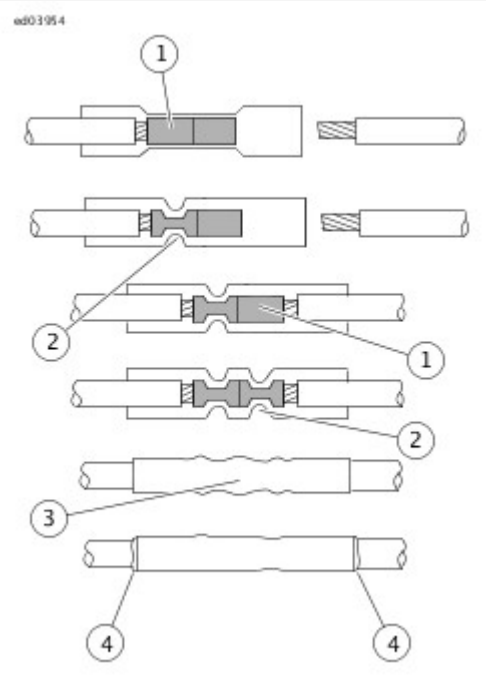

View interactive image

1	Wire lead in metal insert
2	Crimp metal insert
3	Center of crimp
4	Melted SEALANT

Figure 2. Sealed Splice Connector

Special Tools

Description	Part Number	Qty.
TERMINAL EXTRACTOR	B-50085	1
HAND CRIMP FRAME	HD-50120-2	1
TYCO GET 64 DIE	HD-50120-7	1

NOTE

Use HAND CRIMP FRAME (Part Number:HD-50120-2) with TYCO GET 64 DIE (Part Number:HD-50120-7) for Tyco GET 64 series terminal crimping. Refer to Bosch tool instruction sheet for crimping instructions.

Separating Connector

1. See Figure 1. Pull the latch lock open.
2. While pressing the connector latch, pull the connector apart.

Mating Connector

1. Align the connector housings.
2. Press the housings together.
3. Push the latch lock closed.

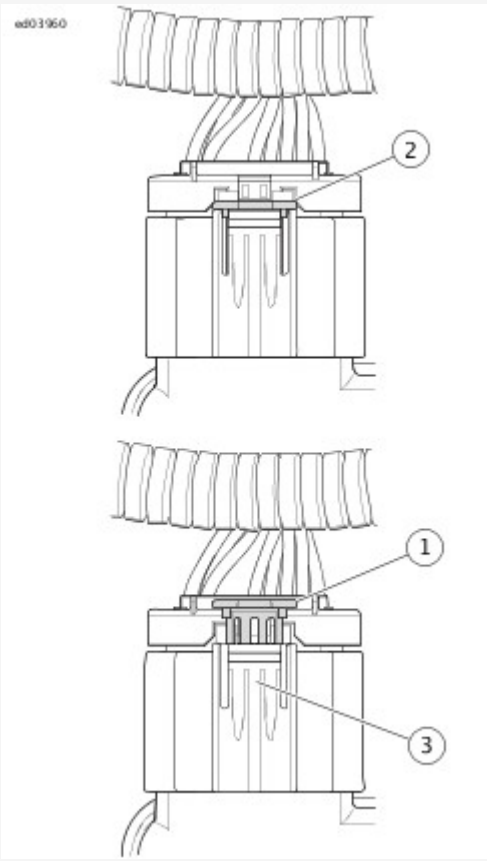

View interactive image

1	Latch lock (open)
2	Latch lock (closed)
3	Connector latch

Figure 1. Tyco GET 64 Sealed Connector Latch and Lock

Terminal Removal

1. See Figure 2. Remove secondary lock from the connector.
2. Insert TERMINAL EXTRACTOR (Part Number:B-50085) into the cavity next to the terminal.
3. Pry and hold the tang away from the terminal.
4. Pull on the wire lead to remove the terminal.

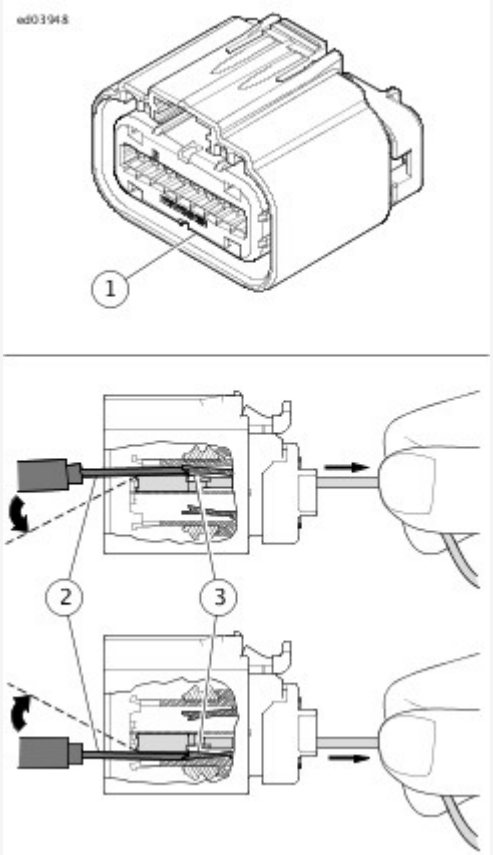

View interactive image

1	Secondary lock
2	Terminal extractor
3	Retention beam

Figure 2. Terminal Removal

Installing Terminal

1. See **Figure 3**. Align the open side of the crimp to the tang side of the connector cavity.
2. Install the terminal into the connector. Terminal will snap into place.
3. Install secondary lock into the connector.

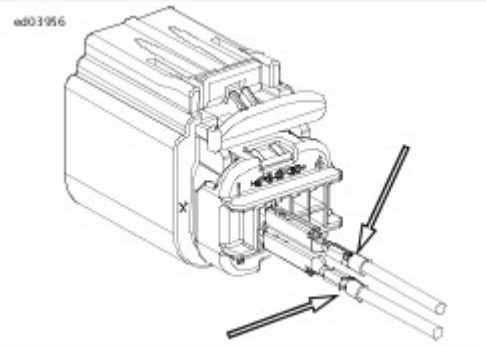

View interactive image

Figure 3. Socket Terminal Orientation: Crimp Open Side

Replacement and Repair

The terminals and connector assemblies are not repairable. Discard and replace any defective or damaged terminals or connector assemblies. Do not re-use a terminal by removing the wire.

Special Tools

Description	Part Number	Qty.
TERMINAL EXTRACTOR	B-50085	1
DIE SET	HD-50120-11	1
HAND CRIMP FRAME	HD-50120-2	1

NOTE

Use HAND CRIMP FRAME (Part Number:HD-50120-2) with DIE SET (Part Number:HD-50120-11) for Tyco MCON series terminal crimping. Refer to Bosch tool instruction sheet for crimping instructions.

Separating Connector

See Figure 1. Pull the safety lock up, press the safety lock to the connector and release, pull and separate the two halves.

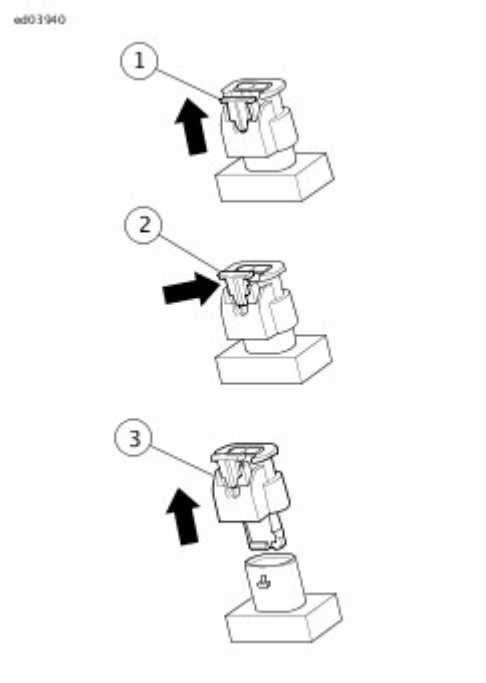

View interactive image

1	Pull safety lock
2	Press safety lock
3	Pull and separate connector

Figure 1. Separating Connector

Mating Connector

See Figure 2. Push the halves of connector together, listen for click of the safety lock, then push the safety lock down.

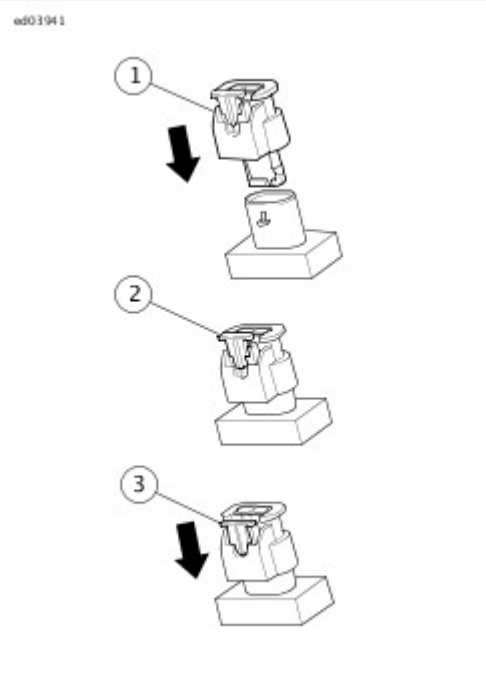

View interactive image

1	Push connectors together
2	Listen for click
3	Push safety lock down

Figure 2. Mating Connector

Terminal Removal

1. See Figure 3. Using a screwdriver, release the secondary lock.
2. Insert TERMINAL EXTRACTOR (Part Number:B-50085) into primary lock.
3. The terminal can be removed by pulling on the wire while simultaneously applying slight press to disengage the primary lock.

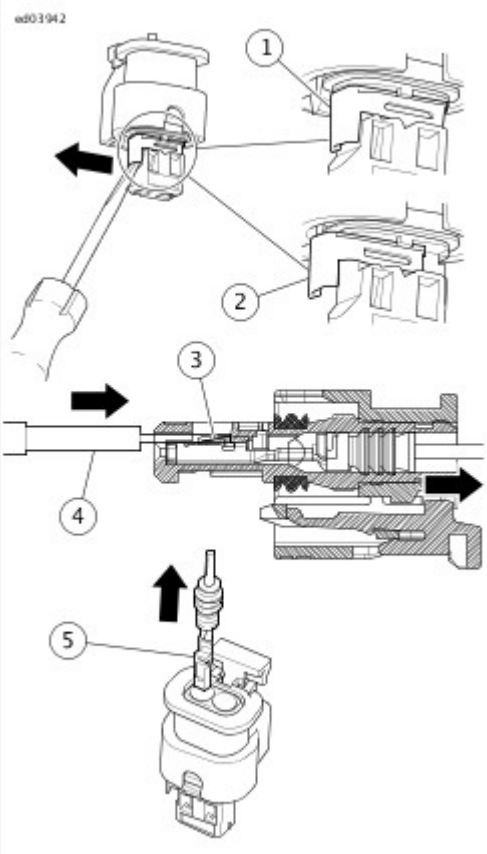

View interactive image

1	Secondary lock in locked position
2	Secondary lock in unlocked position
3	Primary lock
4	Removal tool
5	Remove terminal

Figure 3. Removing Terminal

Installing Terminals

NOTE

Proper orientation of terminal required.

1. See **Figure 4**. Insert terminals into connector until an audible click is heard or lock is felt.
2. Push secondary lock into locked position.

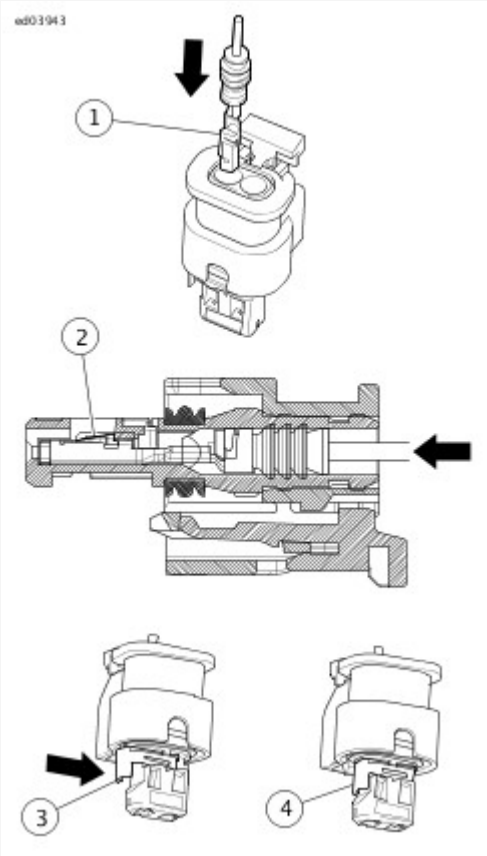

View interactive image

1	Terminal
2	Primary lock
3	Secondary lock in unlocked position
4	Secondary lock in locked position

Figure 4. Inserting Terminal

Replacement and Repair

The terminals and connector assemblies are not repairable. Discard and replace any defective or damaged terminals or connector assemblies. Do not re-use a terminal by removing the wire.

Special Tools

Description	Part Number	Qty.
TERMINAL EXTRACTOR	B-50085	1
SNAP-ON TERMINAL PICK	GA500A	1
HAND CRIMP FRAME	HD-50120-2	1
TYCO MCP DIE	HD-50120-8	1

The Tyco MCP sealed connector is used on certain ABS modules.

NOTE

Use HAND CRIMP FRAME (Part Number:HD-50120-2) with TYCO MCP DIE (Part Number:HD-50120-8) for Tyco MCP series terminal crimping. Refer to Bosch tool instruction sheet for crimping instructions.

Separating Connector

See Figure 1. Press and hold the lock tab. Pulling on both ends of the lever, open the lever.

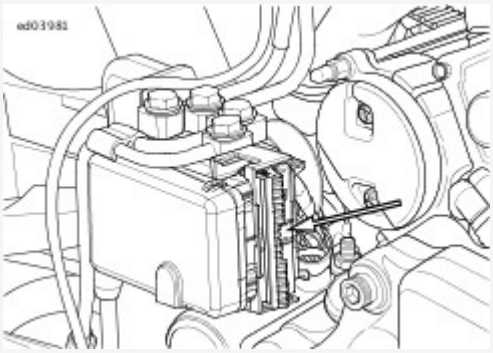

View interactive image

Figure 1. Tyco MCP Connector Release Bar

Mating Connector

Gently mate the pins to the socket. Press and hold the lock tab. Pressing on both ends of the lever, close the lever.

Terminal Removal (Large Terminals)

1. Snap the wire harness cover off of the back of the connector

NOTE

Insert a thin flat bladed screwdriver all the way to the bottom behind the tab of the secondary lock.

2. See Figure 2. Gently slide the secondary lock out of the connector with a screwdriver.
3. Insert the smallest pins of the SNAP-ON TERMINAL PICK (Part Number:GA500A) into the gaps on each side of the terminal to compress the tangs on each side of the terminal.
4. Gently pull on the wire to remove the terminal.

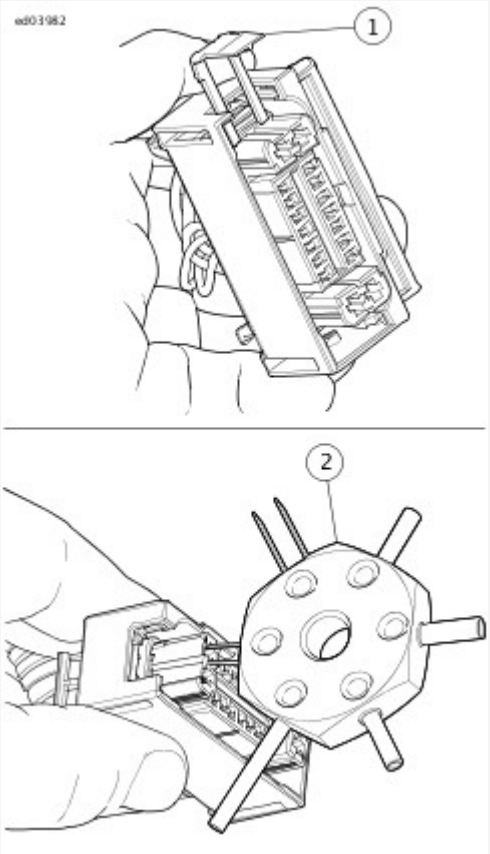

View interactive image

1	Secondary lock
2	Terminal pick

Figure 2. Removing Small Socket Terminals

Terminal Removal (Small Terminals)

1. Snap the wire harness cover off of the back of the connector

NOTE

Insert a thin flat bladed screwdriver all the way to the bottom behind the tab of the secondary lock.

2. Gently slide the secondary lock out of the connector with a screwdriver.
3. See Figure 3. Insert the TERMINAL EXTRACTOR (Part Number:B-50085) into the cavity on the outside of the terminal.
4. Tilt extractor to lift the latch and release the terminal.
5. Gently pull on the wire to remove the terminal.

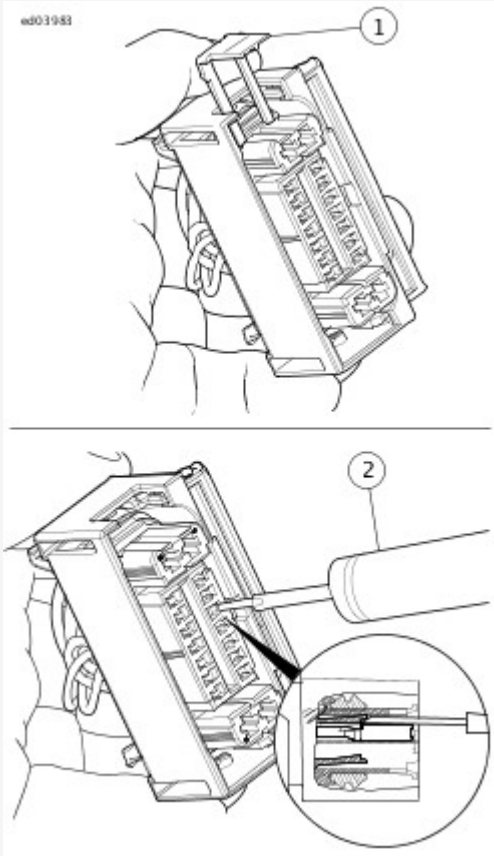

View interactive image

1	Secondary lock
2	Terminal extractor

Figure 3. Removing Small Socket Terminals

Installing Terminals

1. Locate the wire lead cavity by number.
2. Use a hobby knife to bend the tangs on each side of the terminal outward.
3. Align the terminal.
4. Push the terminal in until it clicks.
5. Press the secondary lock back into the connector.
6. Snap the wire cover in place.

Replacement and Repair

The terminals and connector assemblies are not repairable. Discard and replace any defective or damaged terminals or connector assemblies. Do not re-use a terminal by removing the wire.

Special Tools

Description	Part Number	Qty.
TERMINAL EXTRACTOR	B-50085	1
AMP MULTILOCK CRIMPER	HD-41609	1
MULTI-LOCK CRIMPER	HD-44695-A	1

Tyco Multilock Unsealed connectors are found between wire harnesses and component wiring. They are either floating or anchored to the frame with attachment clips. To maintain serviceability, always return connectors to OEM locations after service.

NOTE

- Use the **AMP MULTILOCK CRIMPER (Part Number:HD-41609)** for 070 Multilock terminal crimping.
- Use the **MULTI-LOCK CRIMPER (Part Number:HD-44695-A)** for 040 Multilock terminal crimping.

Refer to Bosch tool instruction sheet for crimping instructions.

Separating Connector

1. If necessary, slide connector attachment clip so T-stud is in the large end of the clip opening. Remove connector from T-stud.
2. See **Figure 1**. Press the release button and pull the connector halves apart.

Mating Connector

1. Hold the connectors to match wire color to wire color.
2. Align the terminals and press the connectors together until they click in place.
3. If OEM location is a T-stud, fit large opening end of attachment clip over T-stud. Slide connector to engage T-stud to small end of opening in clip.

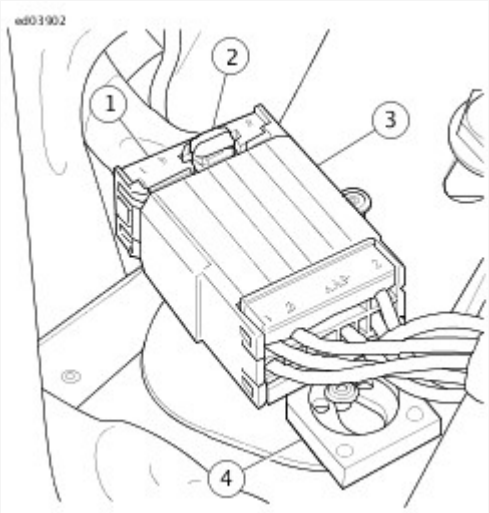

View interactive image

1	Socket housing
2	Release button
3	Pin housing
4	Attachment clip

Figure 1. Tyco Multilock Unsealed Connector

Terminal Removal

1. See Figure 2. Bend back the latch to free one end of secondary lock then repeat on the opposite end. Hinge the secondary lock outward.
2. Look in the terminal side of the connector (opposite the secondary lock) and note the cavity next to each terminal.
3. Using TERMINAL EXTRACTOR (Part Number:B-50085), press the tang in the housing to release the terminal.
   a. **Socket:** Lift the socket tang up.
   b. **Pin:** Press the pin tang down.

NOTE

If the tang is released, a click is heard.

4. Gently pull on wire to remove terminal from cavity.

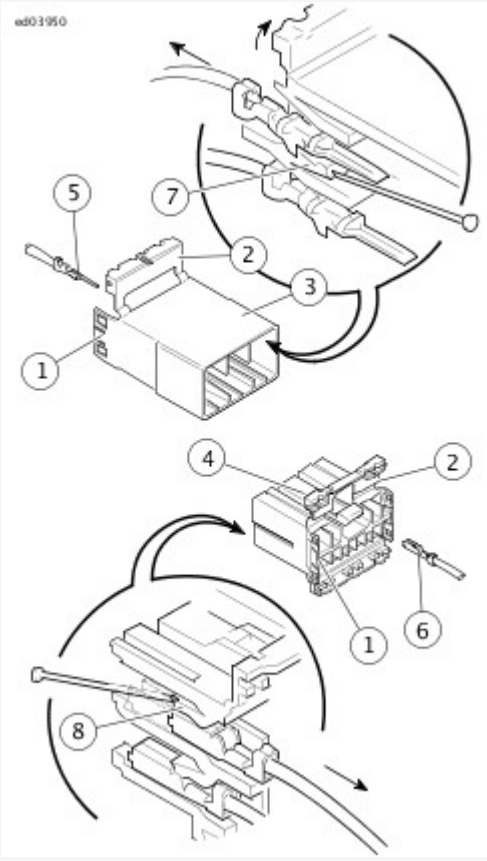

View interactive image

1	Latch

2	Secondary lock open
3	Pin housing
4	Socket housing
5	Pin terminal
6	Socket terminal
7	Tang (pin)
8	Tang (socket)

Figure 2. Tyco 070 Multilock Unsealed Connector: Socket and Pin Housings

Installing Terminals

NOTE

- Match the wire color to the cavity number found on the wiring diagram.
- The release button is always on the top of the connector.
- On the pin side of the connector, tangs are positioned at the bottom of each cavity. Therefore, the slot in the pin terminal (on the side opposite the crimp tails) must face downward.
- On the socket side, tangs are at the top of each cavity. Therefore, the socket terminal slot (on the same side as the crimp tails) must face upward.

1. Hold the terminal so the catch faces the tang in the cavity. Insert the terminal into its numbered cavity until it snaps in place.
2. Gently tug on wire ends to verify that all terminals are locked.
3. Rotate the hinged secondary lock inward until tabs are fully engaged on both sides of connector.

Replacement and Repair

The terminals and connector assemblies are not repairable. Discard and replace any defective or damaged terminals or connector assemblies. Do not re-use a terminal by removing the wire.

Special Tools

Description	Part Number	Qty.
TERMINAL EXTRACTOR	B-50085	1

Separating Connector

1. Lift locking tab.
2. Pull the connector apart.

Mating Connector

1. Align the connector housings.
2. Press the housings together until the locking tab snaps into place.

Terminal Removal

1. File the edge of a **TERMINAL EXTRACTOR (Part Number:B-50085)** to a 45 degree angle.
2. See **Figure 1**. Remove seal from connector.
3. Lift locking tab on either side of connector and remove secondary lock.
4. Insert the extractor into the cavity next to the terminal. Press the retainer away from the terminal.
5. Gently pull the wire to remove the terminal from the connector.

Installing Terminal

1. Align terminal to the connector.
2. Install the terminal into the connector until it snaps into place.
3. Gently pull wire to verify terminal is locked.
4. See **Figure 1**. Install secondary lock into connector.
5. Install seal.

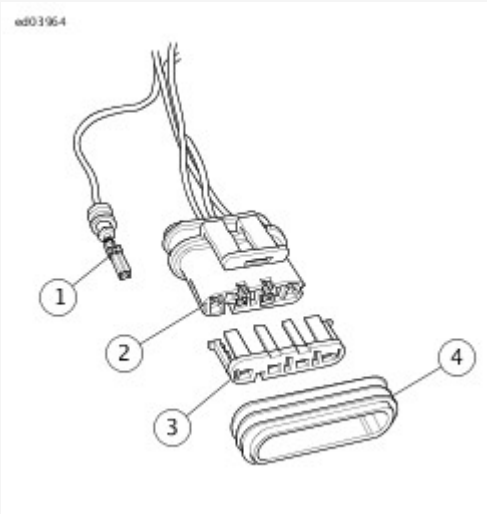

View interactive image

1	Terminal
2	Connector
3	Secondary lock
4	Seal

Figure 1. Tyco SuperSeal 1.5 Sealed Connector

Replacement and Repair

The terminals and connector assemblies are not repairable. Discard and replace any defective or damaged terminals or connector assemblies. Do not re-use a terminal by removing the wire.

Refer to the table below for a list of common acronyms and abbreviations.

Table 1. Acronyms and Abbreviations

ACRONYM OR ABBREVIATION	DESCRIPTION
A	Amperes
AAT	Ambient air temperature
ABS	Anti-lock braking system
AC	Alternating current
ACC	Accessory position on ignition switch
ACR	Automatic compression release
AGM	Absorbed glass mat (battery)
Ah	Ampere-hour
AIS	Active intake solenoid
AWG	American wire gauge
B+	Battery voltage
bar	Bar
BAS	Bank angle sensor
BCM	Body control module
BOB	Breakout box
BTDC	Before top dead center
°C	Celsius (Centigrade)
CA	California
CAL	Calibration
CAN	Controller area network
CB Tx	CB send transmission
CB Rx	CB receive transmission
cc	Cubic centimeters
CCA	Cold cranking amps
CCW	Counterclockwise
CKP	Crankshaft position

cm	Centimeters
cm^3	Cubic centimeters
CW	Clockwise
DC	Direct current
DLC	Data link connector
DOM	Domestic
DOT	Department of Transportation
DTC	Diagnostic trouble code
DVOM	Digital volt ohm meter
ECM	Electronic control module
ECT	Engine coolant temperature
ECU	Electronic control unit
EEPROM	Electrically erasable programmable read only memory
EFI	Electronic fuel injection
EHCU	Electro hydraulic control unit
ET	Engine temperature
ETC	Electronic throttle control
EVAP	Evaporative emissions control system
°F	Fahrenheit
fl oz	Fluid ounce
FPS	Fuel pressure sensor
ft	Feet
ft-lbs	Foot pounds
FTP	Flash to pass
g	Gram
gal	Gallon
GAWR	Gross axle weight rating
GND	Ground (electrical)
GPS	Global positioning system
GVWR	Gross vehicle weight rating

HCU	Hydraulic control unit
HDI	Harley-Davidson International
HD-Link	Networking system
H-DSSS	Harley-Davidson smart security system
HFM	Hands-free mode
HFSM	Hands-free security module
Hg	Mercury
H02S	Heated oxygen sensor
hp	Horsepower
hr	Hour
IAC	Idle air control
IAT	Intake air temperature
IC	Instrument cluster
ID	Inside diameter
IGN	Ignition light/key switch position
IM	Instrument module
in	inch
in^3	Cubic inch
INJ PW	Injector pulse width
INTCM	Intercom
in-lbs	Inch pounds
JSS	Jiffy stand sensor
kg	Kilogram
km	Kilometer
km/h	Kilometers per hour
kPa	Kilopascal
kW	Kilowatt
KS	Knock sensor
L	Liter
lb	Pounds

LCD	Liquid crystal display
LED	Light emitting diode
LH	Left hand
LHCM	Left hand control module
LP	License plate
LT	Left
mA	Milliampere
MAP	Manifold absolute pressure
max	Maximum
mi	Mile
min	Minimum
mL	Milliliter
mm	Millimeter
mph	Miles per hour
ms	Millisecond
Nm	Newton-meter
NIM	Navigation interface module
NiMH	Nickel metal hydride
N/A	Not applicable
O2	Oxygen
OD	Outside diameter
OEM	Original equipment manufacturer
oz	Ounce
P&A	Parts and Accessories
Part No.	Part number
PIN	Personal identification number
PND	Personal navigation device
psi	Pounds per square inch
PWM signal	Pulse width modulated signal
qt	Quart

RAD	Radio
RCM	Reverse control module
RDS	Radio data system
RES	Reserve mark on fuel supply valve
RH	Right hand
RHCM	Right hand control module
rpm	Revolutions per minute
RT	Right
s	Seconds
SCFH	Cubic feet per hour at standard conditions
SDARS	Satellite digital audio radio service
SPDO	Speedometer
SPKR	Speaker
STT	Stop/tail/turn
TA	Traffic announcement
TCA	Throttle control actuator
TDC	Top dead center
TGS	Twist grip sensor
TPMS	Tire pressure monitoring system
TPS	Throttle position sensor
TSM	Turn signal module
TSSM	Turn signal/security module
TT	Telltale
USB	Universal serial bus
V	Volt
VAC	Volts of alternating current
VDC	Volts of direct current
VIN	Vehicle identification number
VR	Voice recognition
VSS	Vehicle speed sensor

W	Watt
WA	Weather alert
WHIM	Wireless headset interface module
WSS	Wheel speed sensor

Table 1. Metric Conversions

MILLIMETERS TO INCHES (MM X 0.03937 = IN)								INCHES TO MILLIMETERS (IN X 25.40 = MM)							
MM	IN	MM	IN	MM	IN	MM	IN	IN	MM	IN	MM	IN	MM	IN	MM
.1	.0039	25	.9842	58	2.283	91	3.582	.001	.025	.6	15.240	1-15/16	49.21	3-5/16	84.14
.2	.0078	26	1.024	59	2.323	92	3.622	.002	.051	5/8	15.875	2	50.80	3-3/8	85.72
.3	.0118	27	1.063	60	2.362	93	3.661	.003	.076	11/16	17.462	2-1/16	52.39	3.4	86.36
.4	.0157	28	1.102	61	2.401	94	3.701	.004	.102	.7	17.780	2.1	53.34	3-7/16	87.31
.5	.0197	29	1.142	62	2.441	95	3.740	.005	.127	3/4	19.050	2-1/8	53.97	3-1/2	88.90
.6	.0236	30	1.181	63	2.480	96	3.779	.006	.152	.8	20.320	2-3/16	55.56	3-9/16	90.49
.7	.0275	31	1.220	64	2.519	97	3.819	.007	.178	13/16	20.638	2.2	55.88	3.6	91.44
.8	.0315	32	1.260	65	2.559	98	3.858	.008	.203	7/8	22.225	2-1/4	57.15	3-5/8	92.07
.9	.0354	33	1.299	66	2.598	99	3.897	.009	.229	.9	22.860	2.3	58.42	3-11/16	93.66
1	.0394	34	1.338	67	2.638	100	3.937	.010	.254	15/16	23.812	2-5/16	58.74	3.7	93.98
2	.0787	35	1.378	68	2.677	101	3.976	1/64	.397	1	25.40	2-3/8	60.32	3-3/4	95.25
3	.1181	36	1.417	69	2.716	102	4.016	.020	.508	1-1/16	26.99	2.4	60.96	3.8	96.52
4	.1575	37	1.456	70	2.756	103	4.055	.030	.762	1.1	27.94	2-7/16	61.91	3-13/16	96.84
5	.1968	38	1.496	71	2.795	104	4.094	1/32	.794	1-1/8	28.57	2-1/2	63.50	3-7/8	98.42
6	.2362	39	1.535	72	2.834	105	4.134	.040	1.016	1-3/16	30.16	2-9/16	65.09	3.9	99.06
7	.2756	40	1.575	73	2.874	106	4.173	.050	1.270	1.2	30.48	2.6	66.04	3-15/16	100.01
8	.3149	41	1.614	74	2.913	107	4.212	.060	1.524	1-1/4	31.75	2-5/8	66.67	4	101.6
9	.3543	42	1.653	75	2.953	108	4.252	1/16	1.588	1.3	33.02	2-11/16	68.26	4-1/16	102.19
10	.3937	43	1.693	76	2.992	109	4.291	.070	1.778	1-5/16	33.34	2.7	68.58	4.1	104.14

11	.4331	44	1.732	77	3.031	110	4.331	.080	2.032	1-3/8	34.92	2-3/4	69.85	4-1/8	104.77
12	.4724	45	1.772	78	3.071	111	4.370	.090	2.286	1.4	35.56	2.8	71.12	4-3/16	106.36
13	.5118	46	1.811	79	3.110	112	4.409	.1	2.540	1-7/16	36.51	2-13/16	71.44	4.2	106.68
14	.5512	47	1.850	80	3.149	113	4.449	1/8	3.175	1-1/2	38.10	2-7/8	73.02	4-1/4	107.95
15	.5905	48	1.890	81	3.189	114	4.488	3/16	4.762	1-9/16	39.69	2.9	73.66	4.3	109.22
16	.6299	49	1.929	82	3.228	115	4.527	.2	5.080	1.6	40.64	2-15/16	74.61	4-5/16	109.54
17	.6693	50	1.968	83	3.268	116	4.567	1/4	6.350	1-5/8	41.27	3	76.20	4-3/8	111.12
18	.7086	51	2.008	84	3.307	117	4.606	.3	7.620	1-11/16	42.86	3-1/16	77.79	4.4	111.76
19	.7480	52	2.047	85	3.346	118	4.645	5/16	7.938	1.7	43.18	3.1	78.74	4-7/16	112.71
20	.7874	53	2.086	86	3.386	119	4.685	3/8	9.525	1-3/4	44.45	3-1/8	79.37	4-1/2	114.30
21	.8268	54	2.126	87	3.425	120	4.724	.4	10.160	1.8	45.72	3-3/16	80.96	4-9/16	115.89
22	.8661	55	2.165	88	3.464	121	4.764	7/16	11.112	1-13/16	46.04	3.2	81.28	4.6	116.84
23	.9055	56	2.205	89	3.504	122	4.803	1/2	12.700	1-7/8	47.62	3-1/4	82.55	4-5/8	117.47
24	.9449	57	2.244	90	3.543	123	4.842	9/16	14.288	1.9	48.26	3.3	83.82	4-11/16	119.06

Unless otherwise specified, all fluid volume measurements in this manual are expressed in United States (U.S.) units-of-measure. See below:

- 1 pint (U.S.) = 16 fluid ounces (U.S.)
- 1 quart (U.S.) = 2 pints (U.S.) = 32 fl. oz. (U.S.)
- 1 gallon (U.S.) = 4 quarts (U.S.) = 128 fl. oz. (U.S.)

Fluid volume measurements in this manual include the metric system equivalents. In the metric system, 1 liter (L) = 1,000 milliliters (mL). To convert between U.S. units-of-measure and metric units-of-measure, refer to the following:

- fluid ounces (U.S.) x 29.574 = milliliters
- pints (U.S.) x 0.473 = liters
- quarts (U.S.) x 0.946 = liters
- gallons (U.S.) x 3.785 = liters
- milliliters x 0.0338 = fluid ounces (U.S.)
- liters x 2.114 = pints (U.S.)
- liters x 1.057 = quarts (U.S.)
- liters x 0.264 = gallons (U.S.)

Fluid volume measurements in this manual do not include the British Imperial (Imp.) system equivalents. The following conversions exist in the British Imperial system:

- 1 pint (Imp.) = 20 fluid ounces (Imp.)
- 1 quart (Imp.) = 2 pints (Imp.)
- 1 gallon (Imp.) = 4 quarts (Imp.)

Although the same unit-of-measure terminology as the U.S. system is used in the British Imperial (Imp.) system, the actual volume of each British Imperial unit-of-measure differs from its U.S. counterpart. The U.S. fluid ounce is larger than the British Imperial fluid ounce. However, the U.S. pint, quart, and gallon are smaller than the British Imperial pint, quart, and gallon, respectively. To convert between U.S. units and British Imperial units, refer to the following:

- fluid ounces (U.S.) x 1.042 = fluid ounces (Imp.)
- pints (U.S.) x 0.833 = pints (Imp.)
- quarts (U.S.) x 0.833 = quarts (Imp.)
- gallons (U.S.) x 0.833 = gallons (Imp.)
- fluid ounces (Imp.) x 0.960 = fluid ounces (U.S.)
- pints (Imp.) x 1.201 = pints (U.S.)
- quarts (Imp.) x 1.201 = quarts (U.S.)
- gallons (Imp.) x 1.201 = gallons (U.S.)

The U.S. units of torque, foot pounds and inch pounds, are used in this manual. To convert units, use the following equations:

- foot pounds (ft-lbs) X 12.00000 = inch pounds (**in-lbs**)
- inch pounds (**in-lbs**) X 0.08333 = foot pounds (ft-lbs)

All metric torque specifications are written in Newton-meters (Nm). To convert metric to United States units and United States to metric, use the following equations:

- Newton meters (Nm) X 0.737563 = foot pounds (ft-lbs)
- Newton meters (Nm) X 8.85085 = inch pounds (**in-lbs**)
- foot pounds (ft-lbs) X 1.35582 = Newton meters (Nm)
- inch pounds (**in-lbs**) X 0.112985 = Newton meters (Nm)

2019 WIRING DIAGRAM WALL CHART

ABOUT THIS MANUAL

Wiring and Circuit Diagrams

The diagrams either show entire systems or specific circuits. The circuit specific diagrams only show the components and wiring in the system(s)listed in the diagram title. Always refer to the diagram title for diagram type.

Troubleshooting

Once a problem has been isolated to a specific system or circuit, the circuit specific diagrams will simplify locating the problem.
NOTE
Harness part numbers may be included on some wiring diagrams. Use these numbers for reference purposes only. ALWAYS REFER TO THE PARTS CATALOG WHEN ORDERING WIRE HARNESSES.

Table of Contents

SOFTAILR MODELS (94000544)

Power Distribution: 2019 Softail
Sensor Grounds: 2019 Softail
Ground Circuit: 2019 Softail
Front Lighting and Hand Controls: 2019 Softail
Backbone Harness 1 of 3: 2019 Softail
Engine Harness 2 of 3: 2019 Softail
Main Harness 3 of 3: 2019 Softail
Rear Lighting: 2019 Softail

STREET MODELS (94000547)

IGN and ACC
Grounds
Lighting and Hand Controls: 2019 Street
Main Harness (1 of 3): 2019 Street
Main Harness (2 of 3): 2019 Street
Main Harness (3 of 3) (750A): 2019 Street
Main Harness (3 of 3) (except 750A): 2019 Street

SPORTSTERR MODELS (94000546)

Battery Power Distribution
Ignition and Accessory Power Distribution
Sensor Grounds
Ground Circuit: 1 of 2
Ground Circuit: 2 of 2
Front Lighting and Hand Controls: 2019 Sportster
Main Harness 1 of 2: 2019 Sportster
Main Harness 2 of 2: 2019 Sportster
Rear Lighting: 2019 Sportster

SOFTAILR MODELS

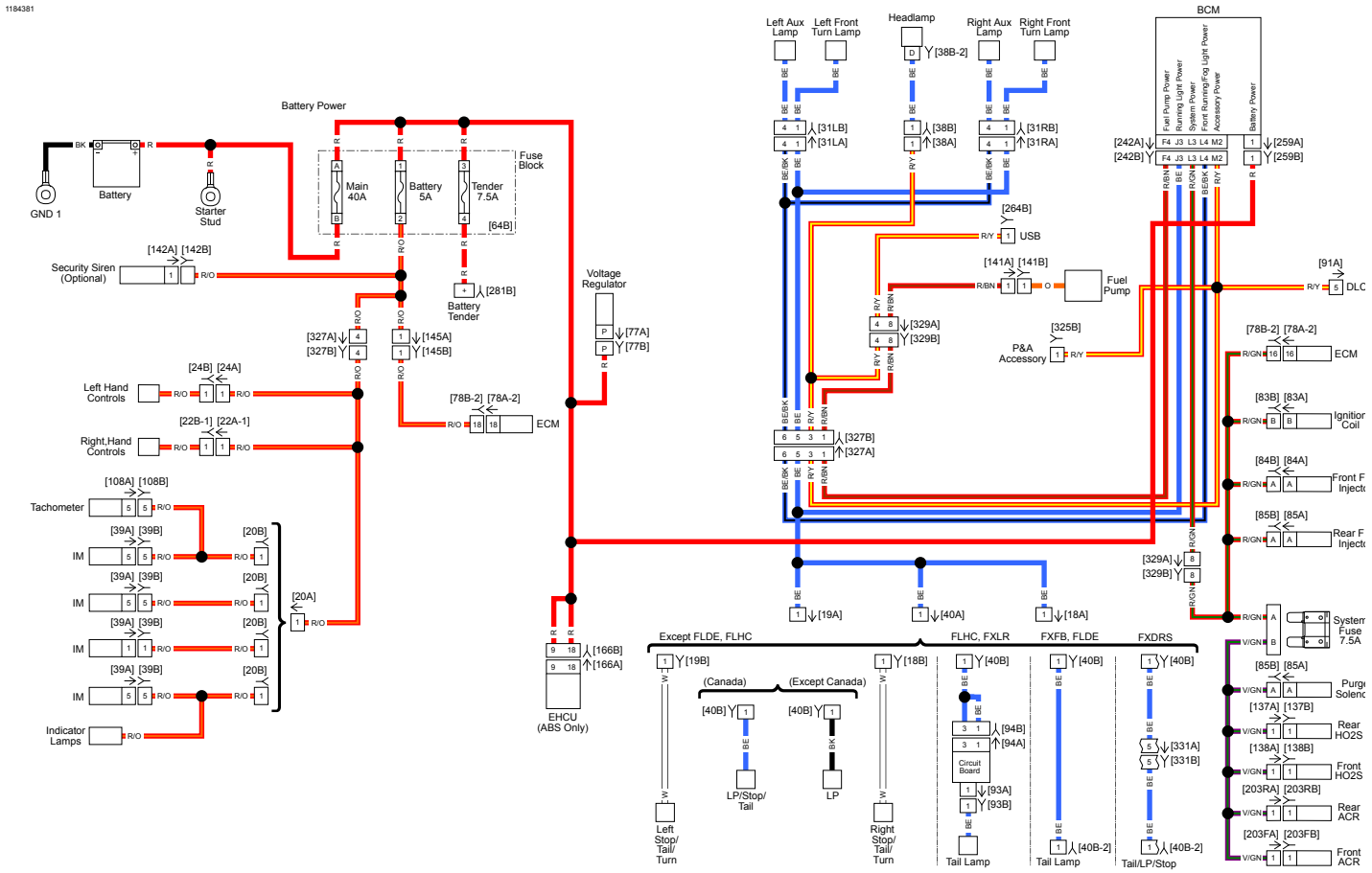

Power Distribution: 2019 Softail

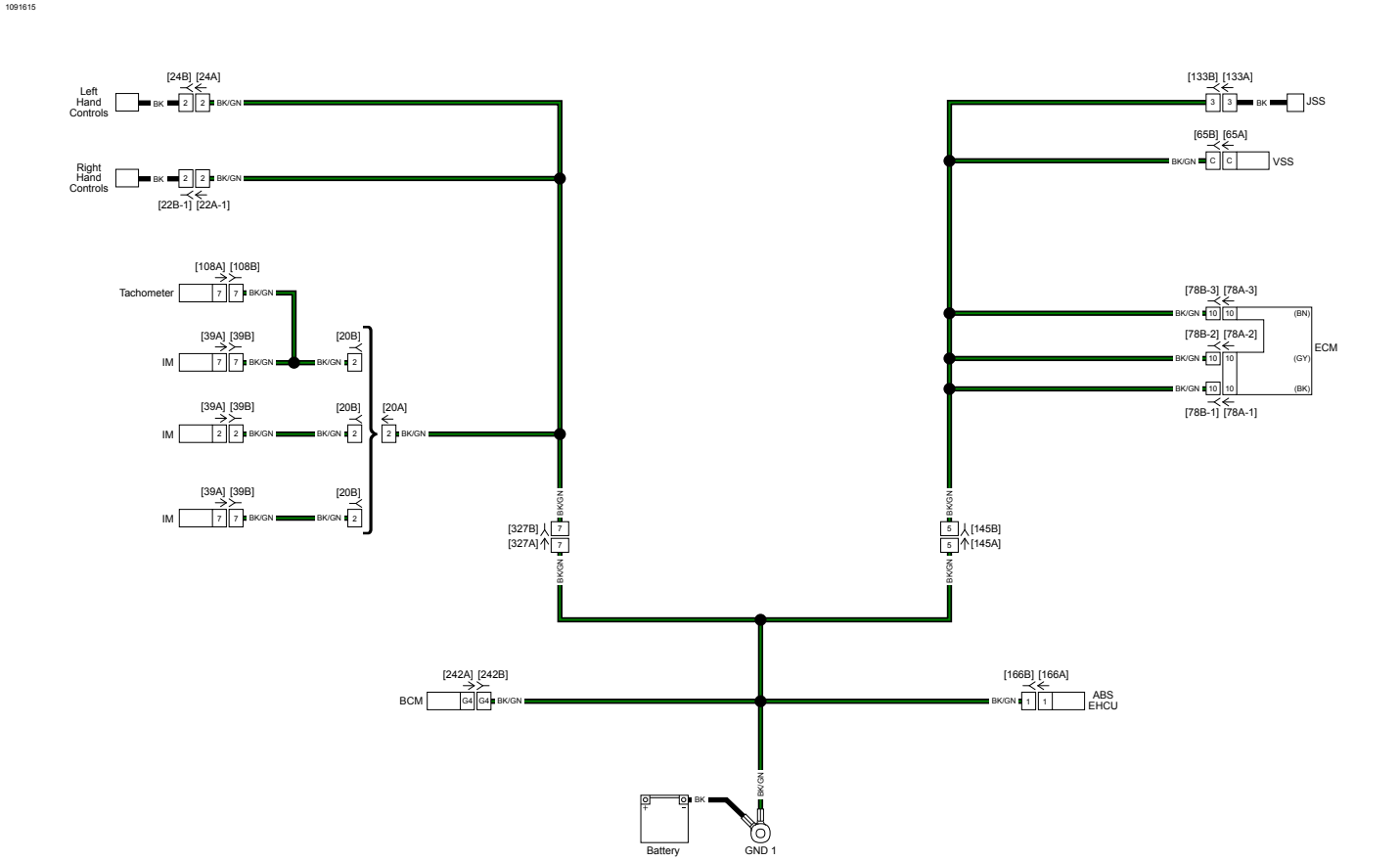

Sensor Grounds: 2019 Softail

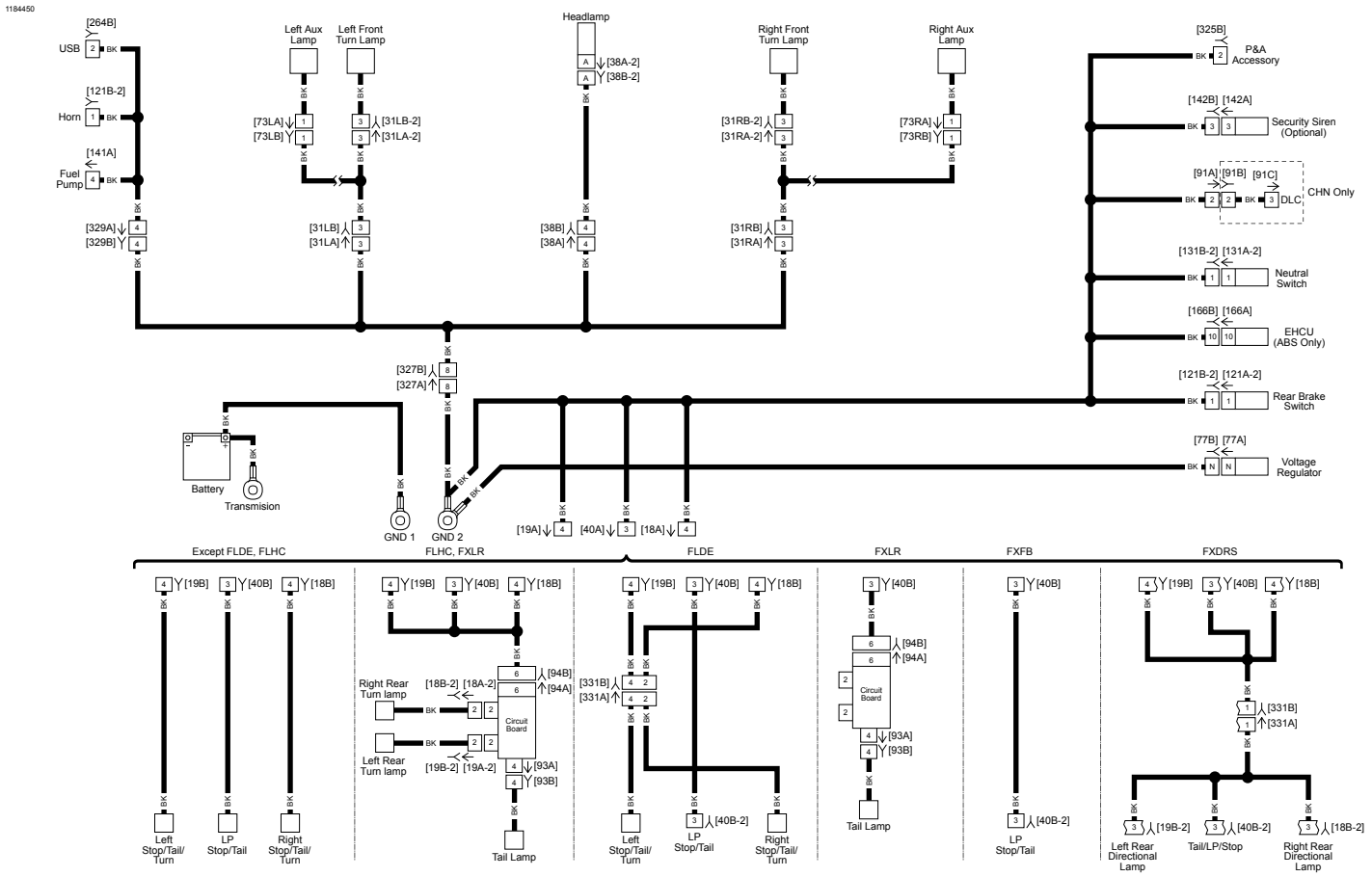

Ground Circuit: 2019 Softail

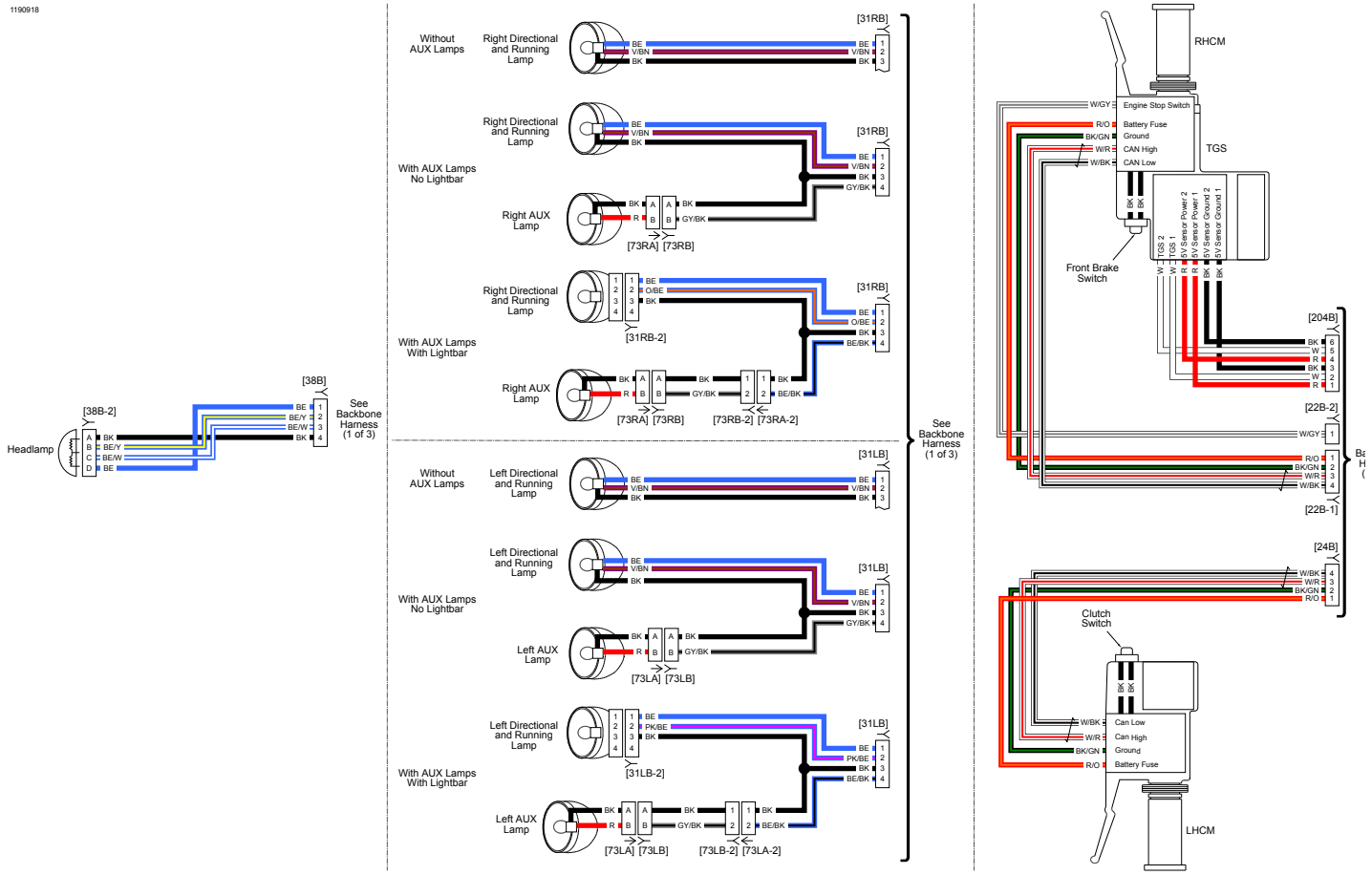

Front Lighting and Hand Controls: 2019 Softail

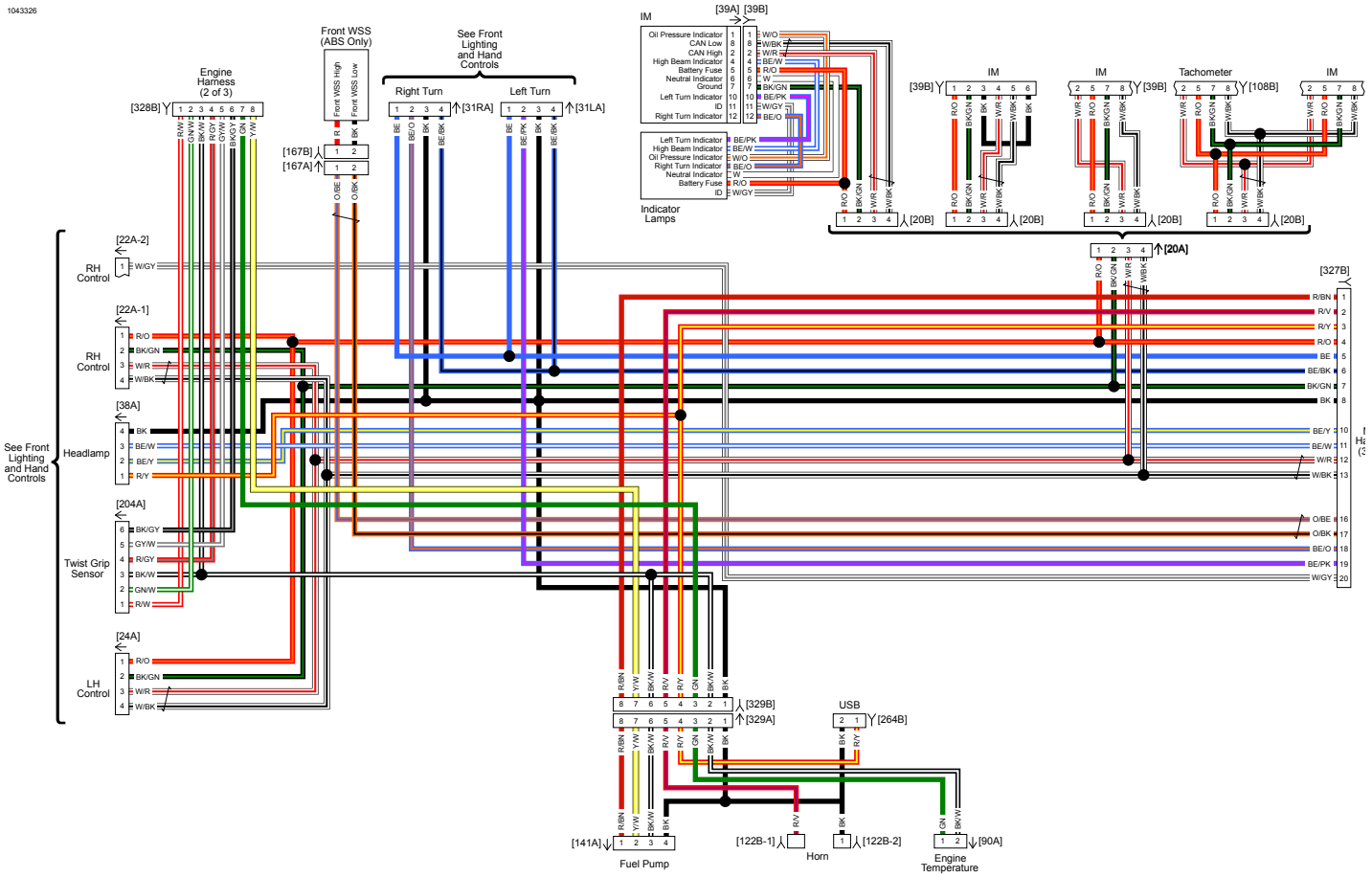

Backbone Harness 1 of 3: 2019 Softail

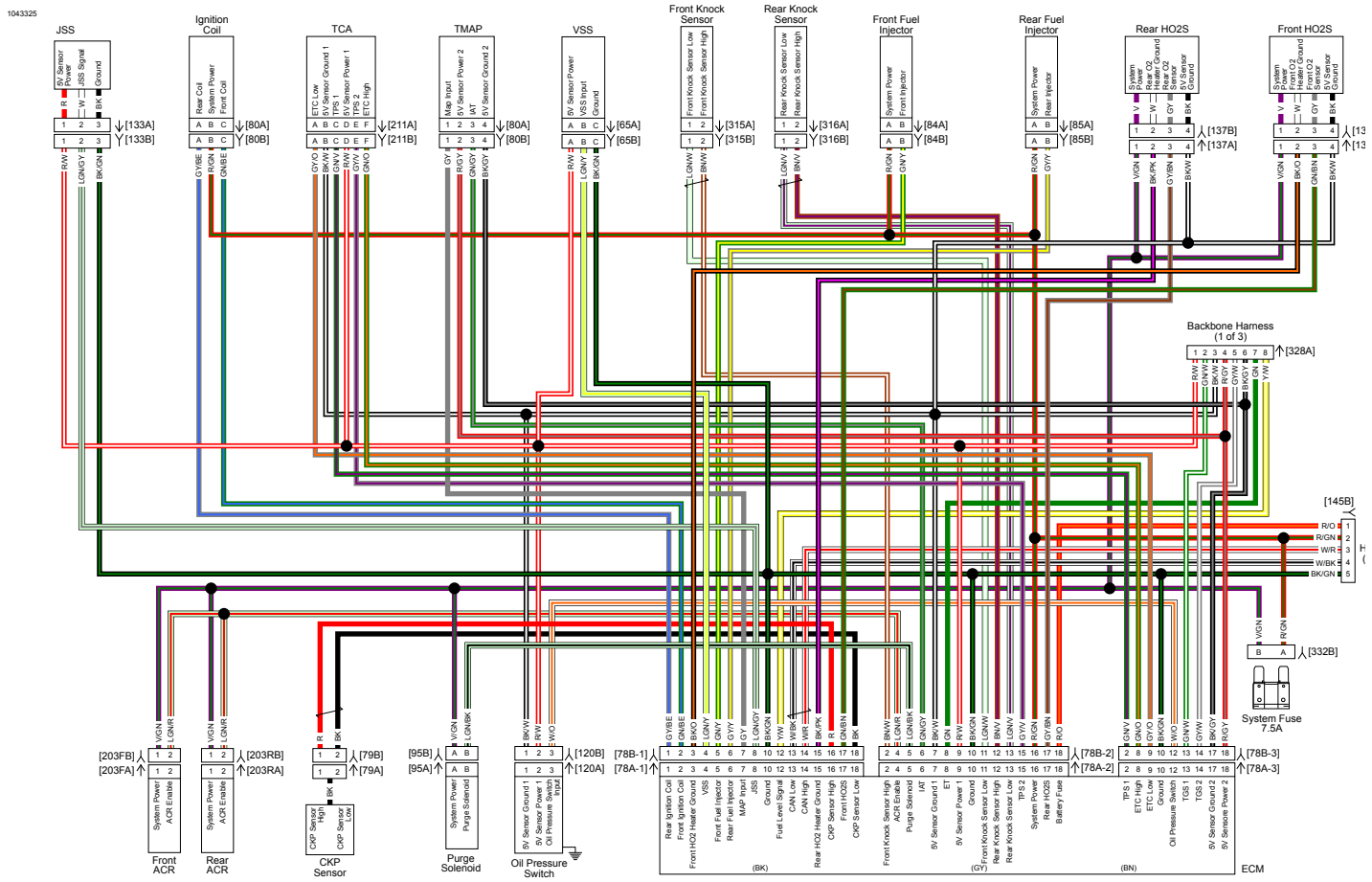

Engine Harness 2 of 3: 2019 Softail

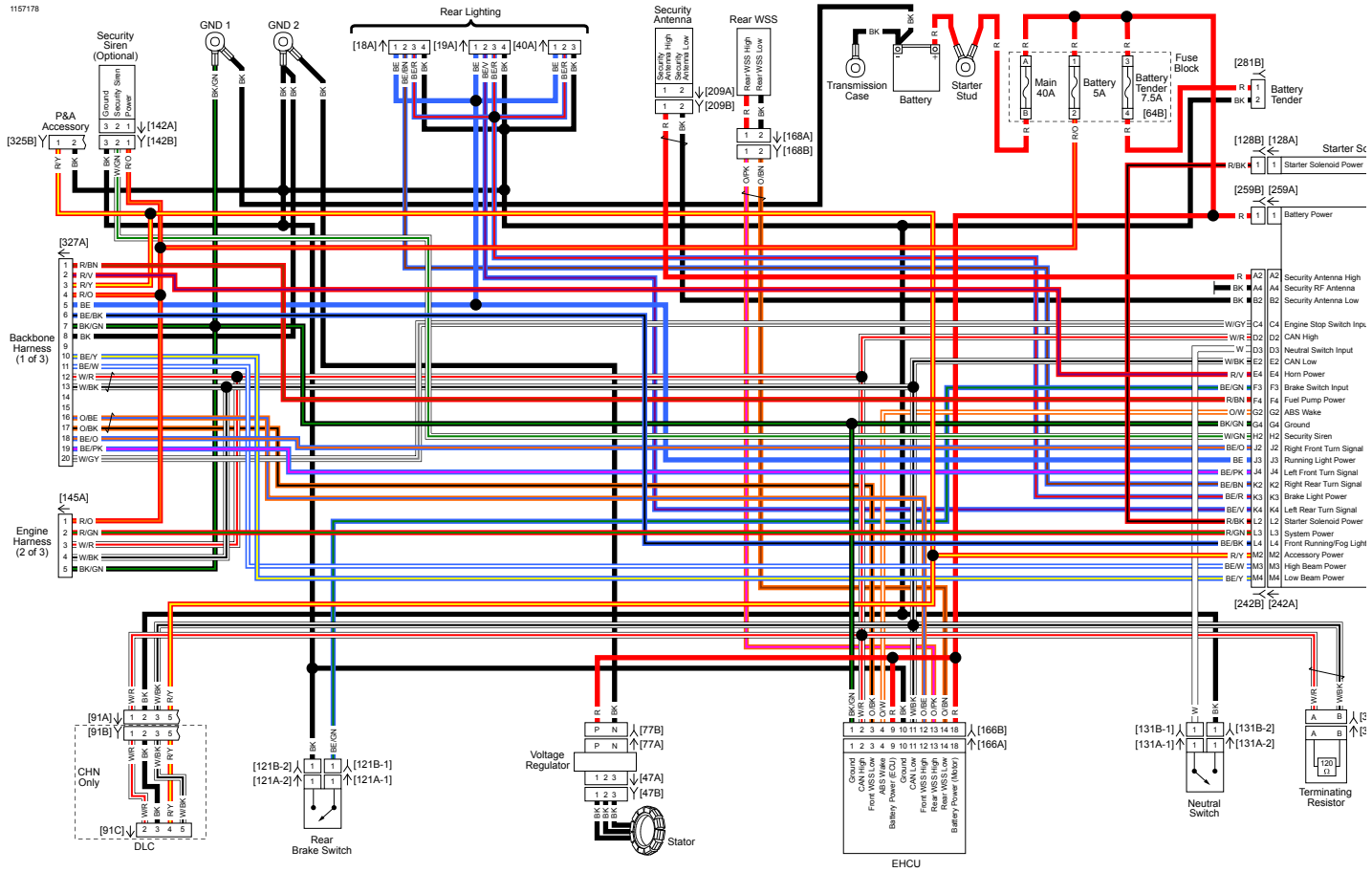

Main Harness 3 of 3: 2019 Softail

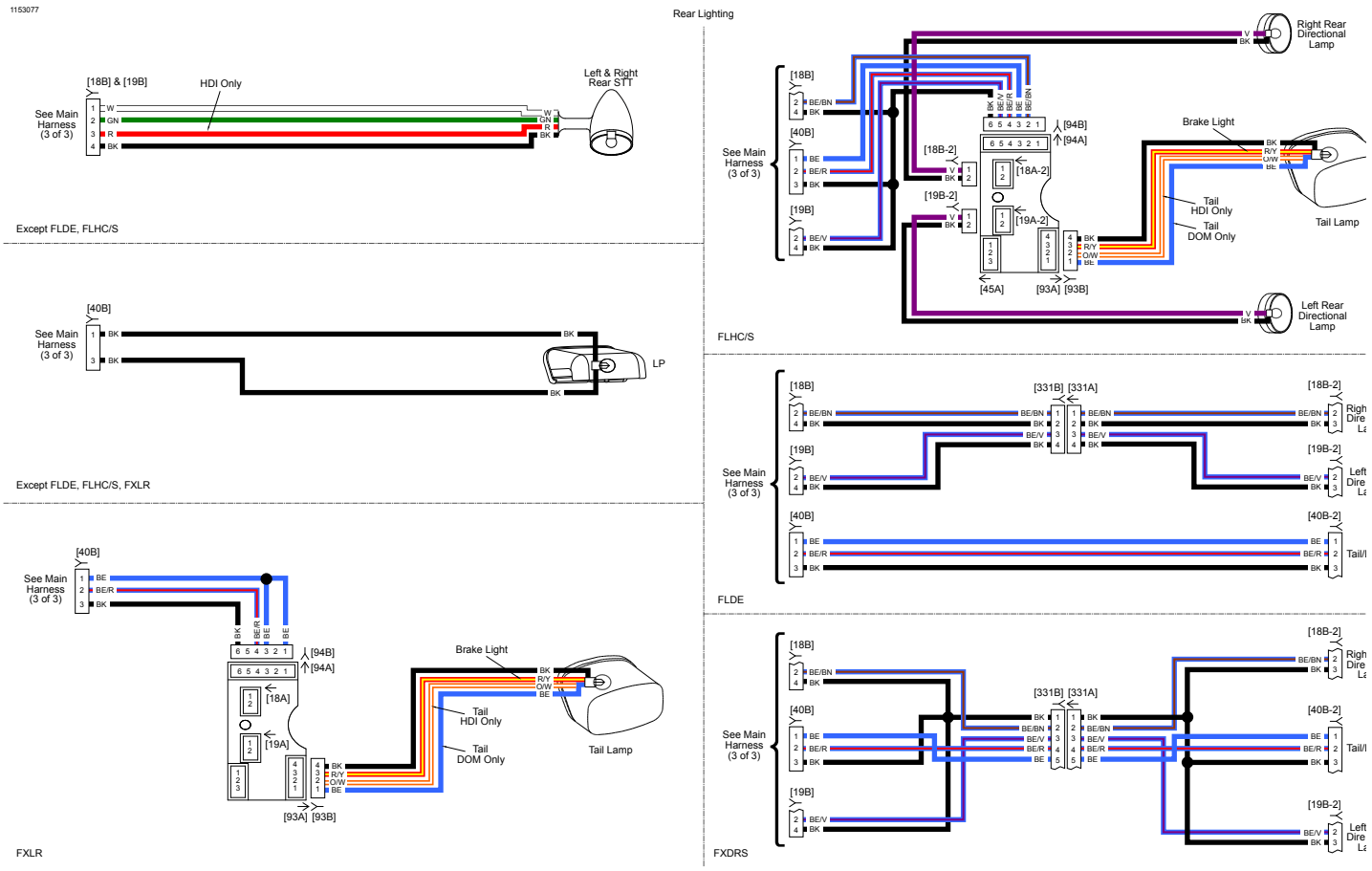

Rear Lighting: 2019 Softail

STREET MODELS

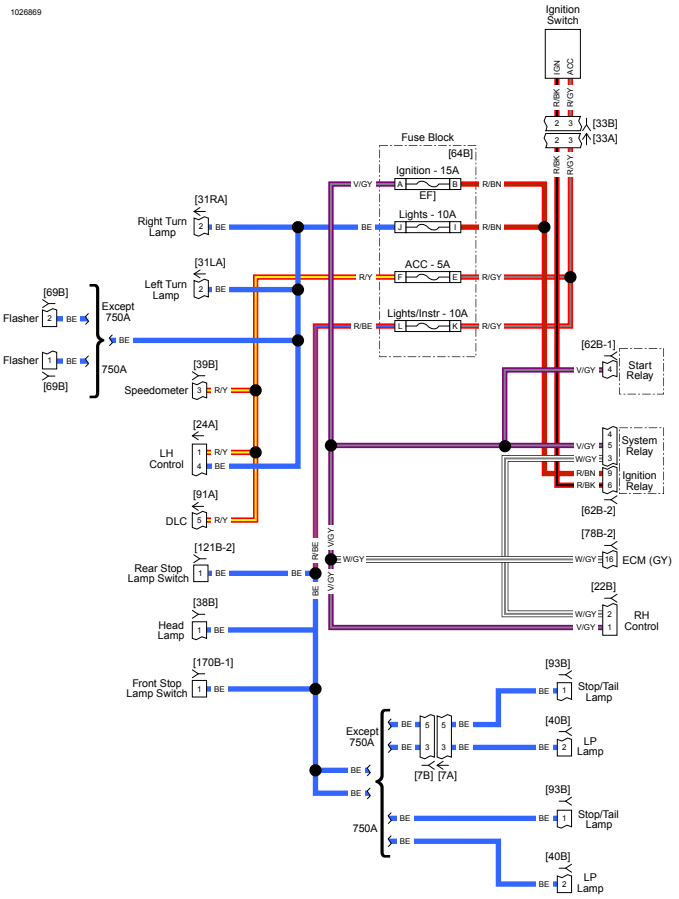

IGN and ACC

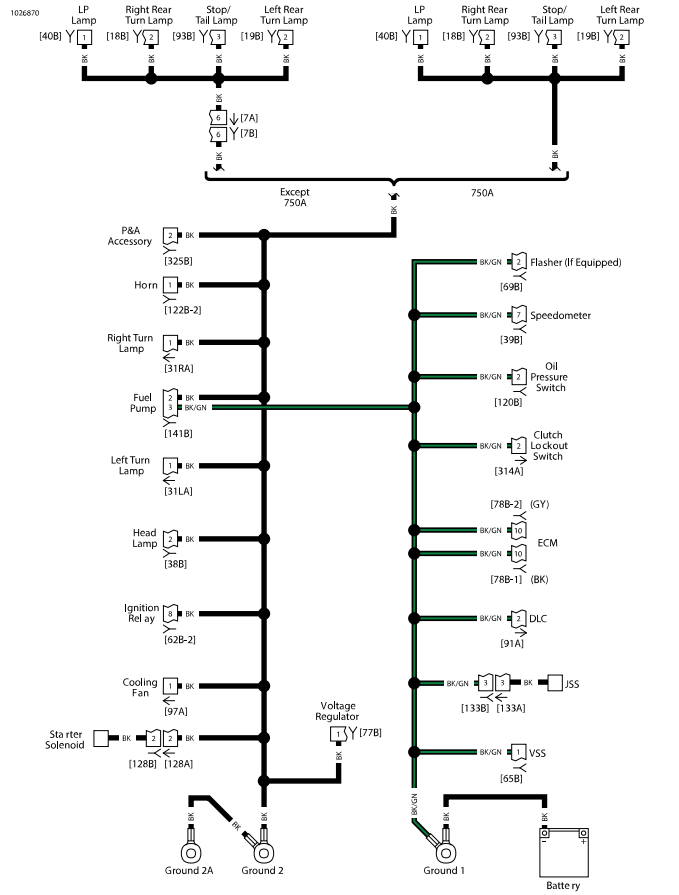

Grounds

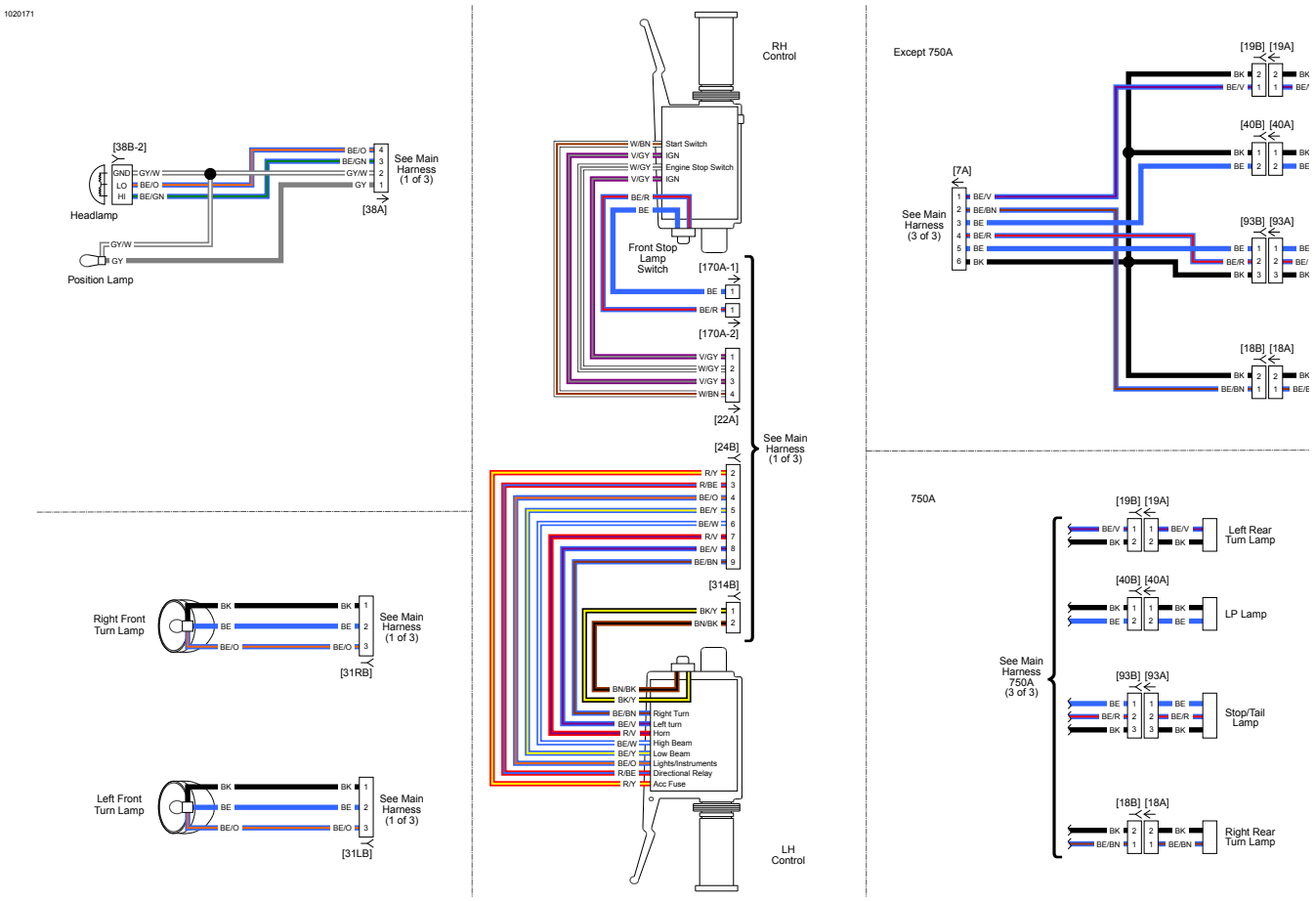

Lighting and Hand Controls: 2019 Street

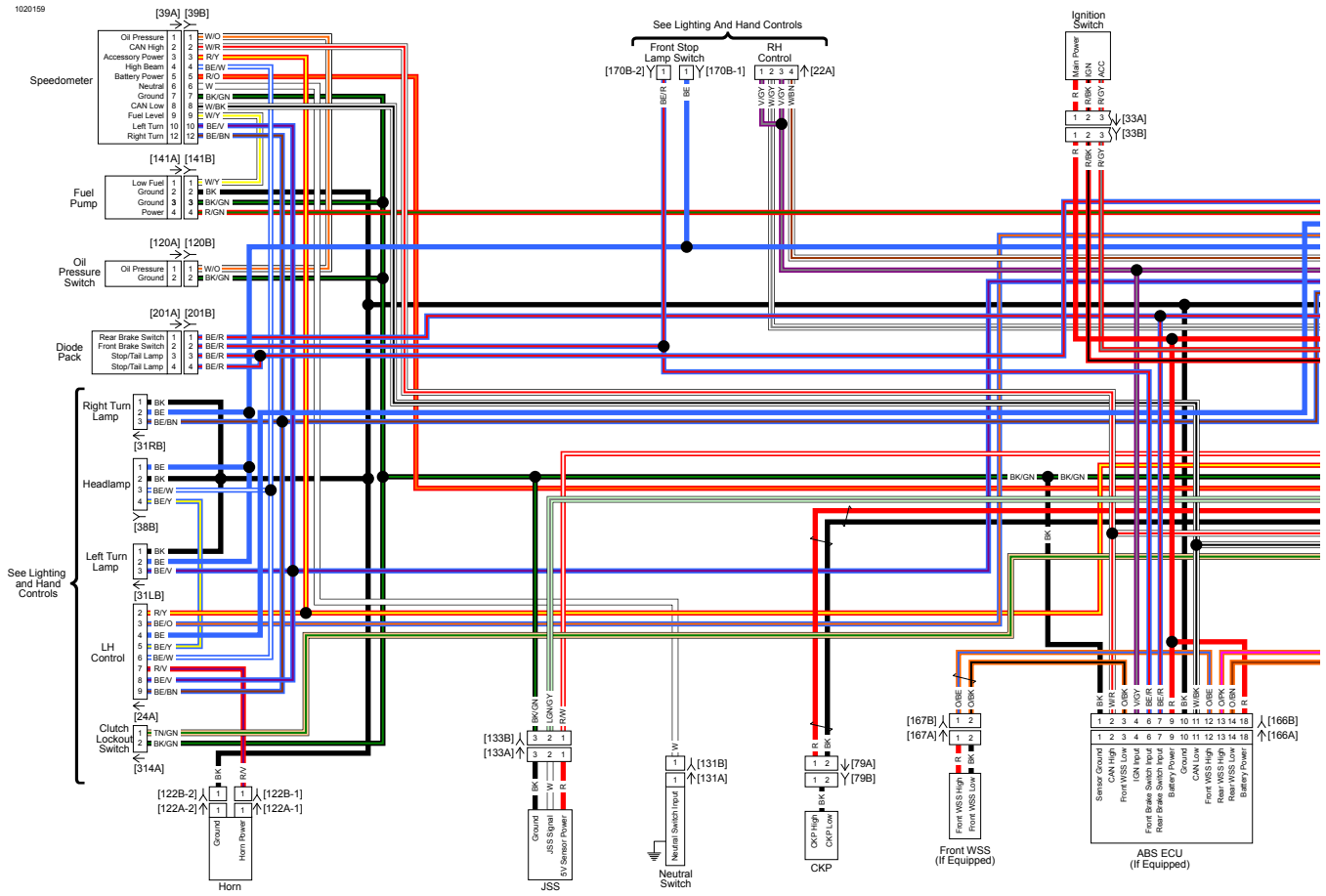

Main Harness (1 of 3): 2019 Street

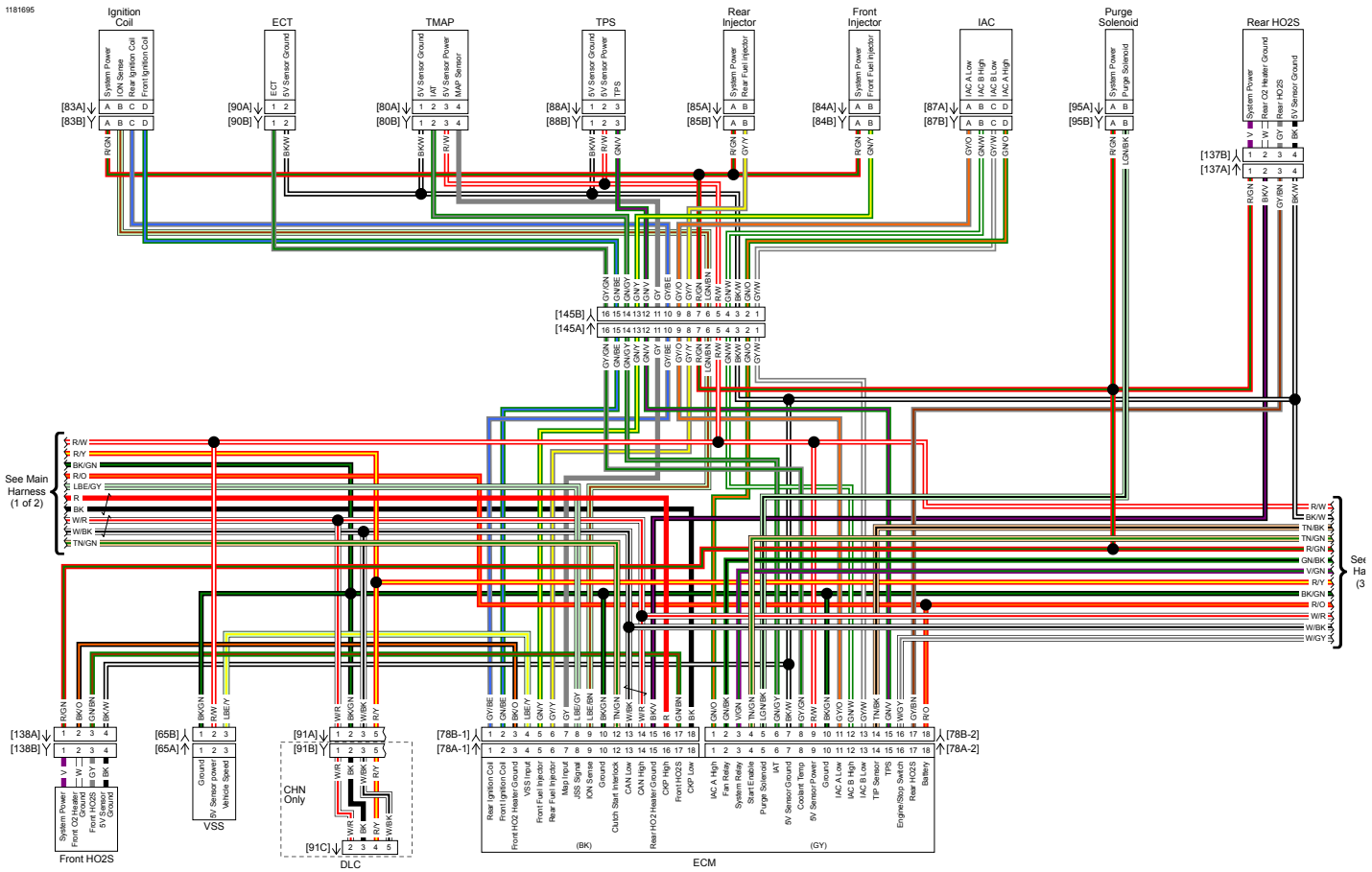

Main Harness (2 of 3): 2019 Street

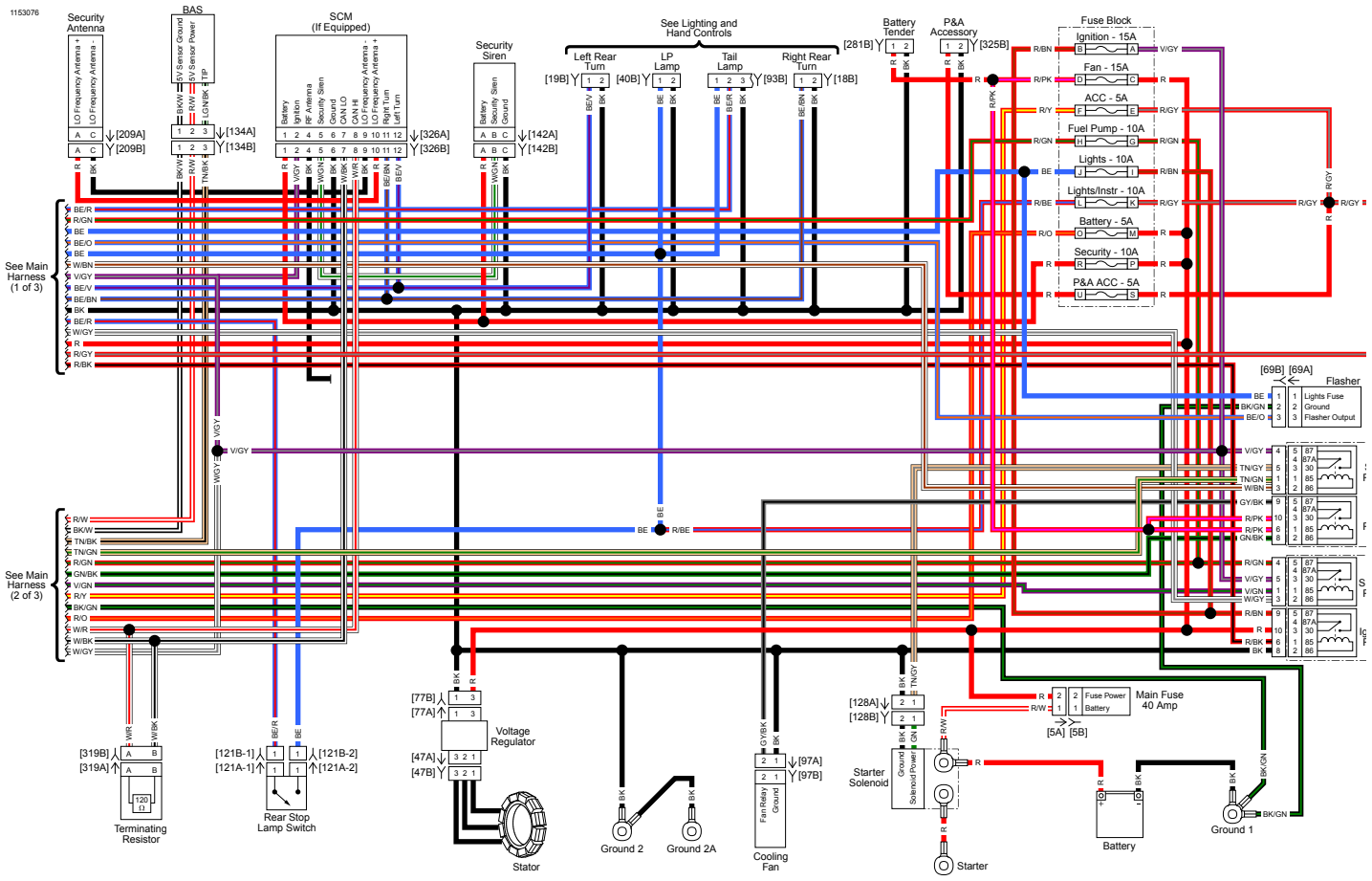

Main Harness (3 of 3) (750A): 2019 Street

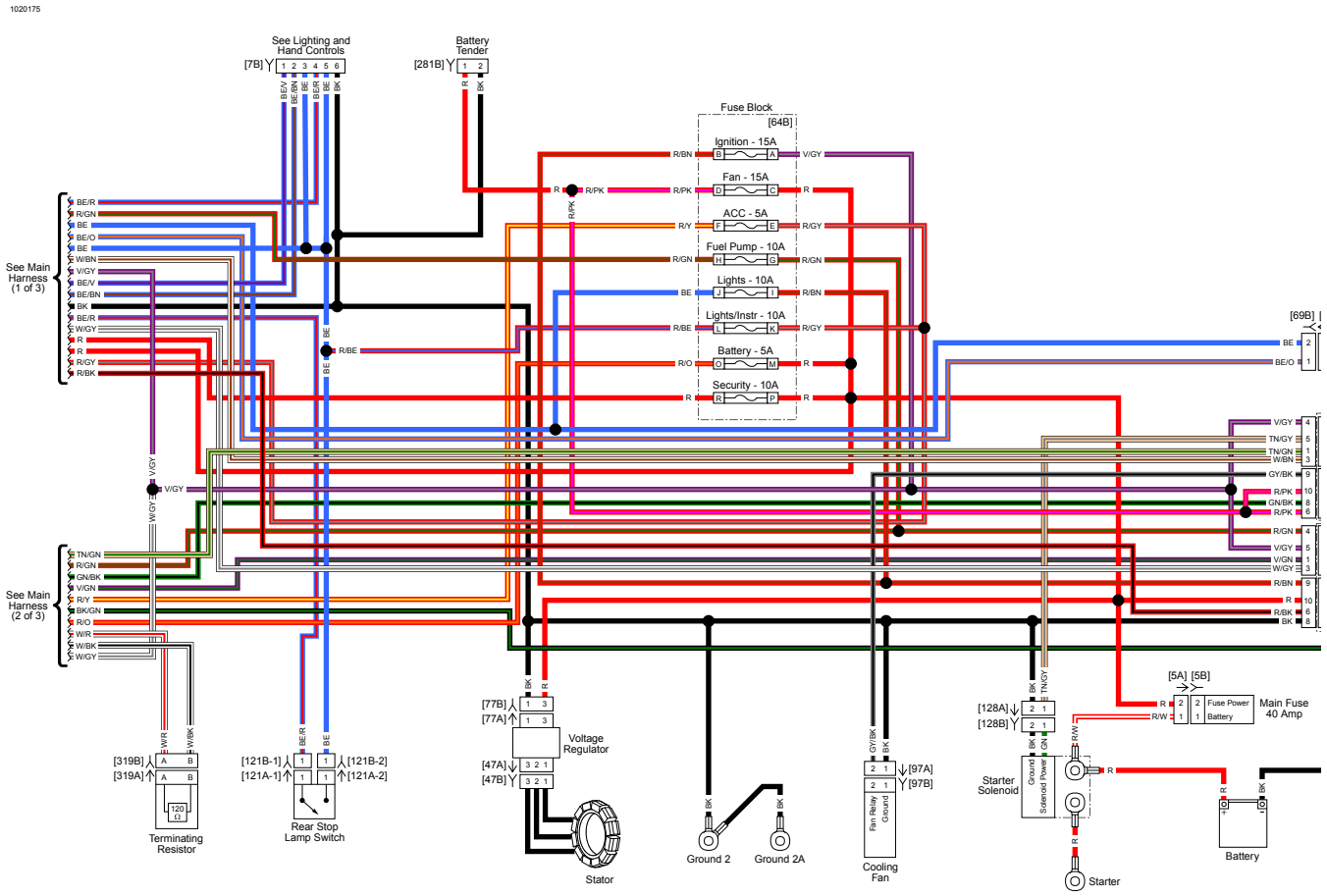

Main Harness (3 of 3) (except 750A): 2019 Street

SPORTSTERR MODELS

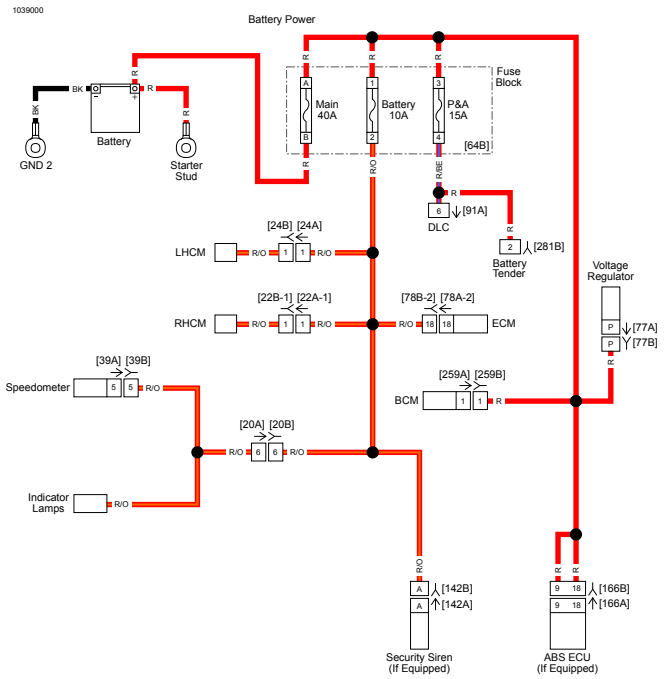

Battery Power Distribution

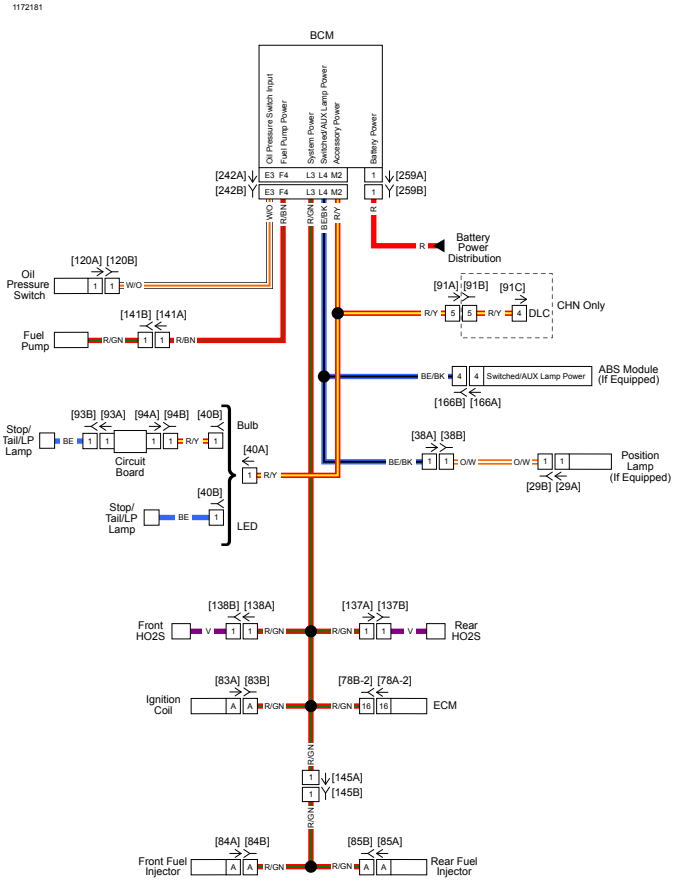

Ignition and Accessory Power Distribution

1038999

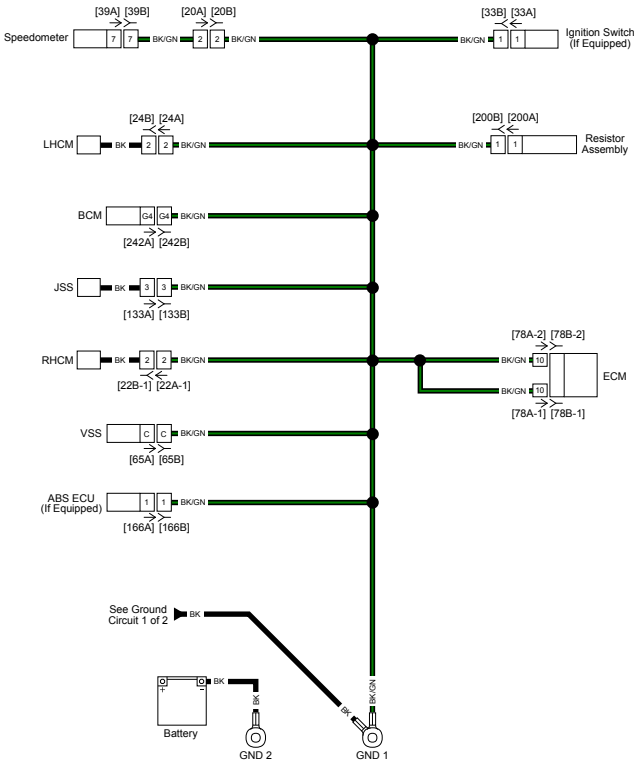

Sensor Grounds

1172185

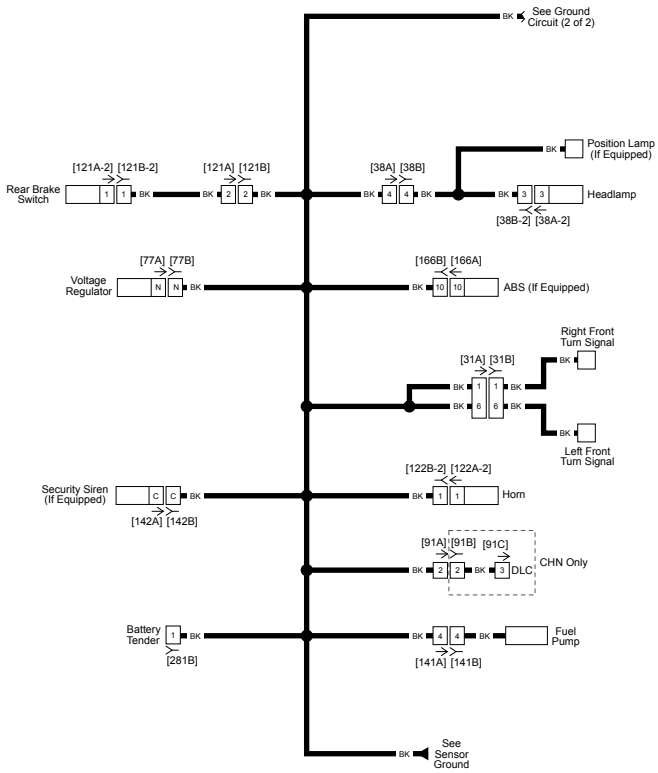

Ground Circuit: 1 of 2

em01484

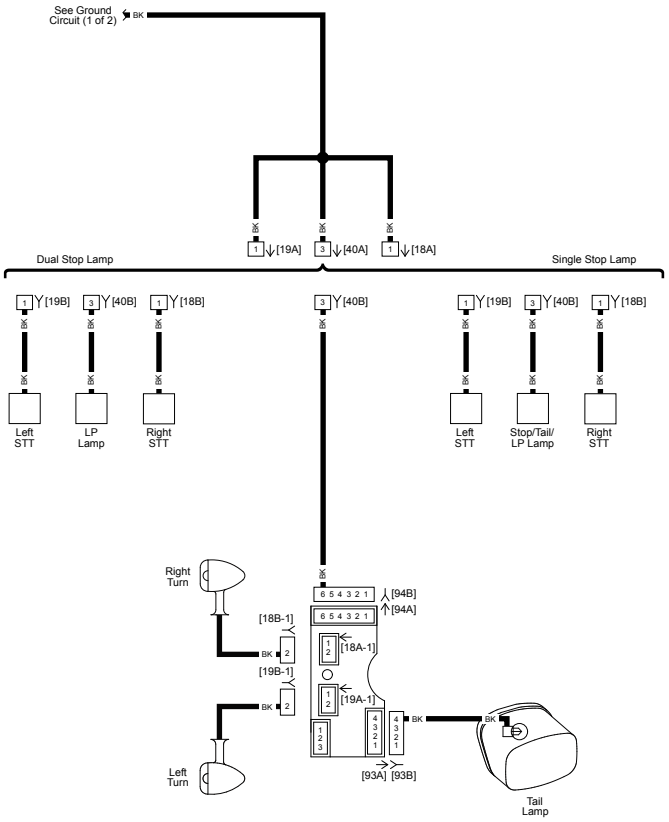

Ground Circuit: 2 of 2

et00703

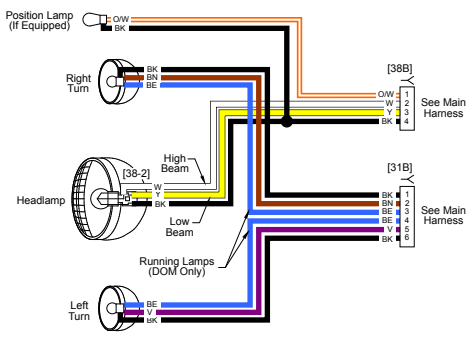

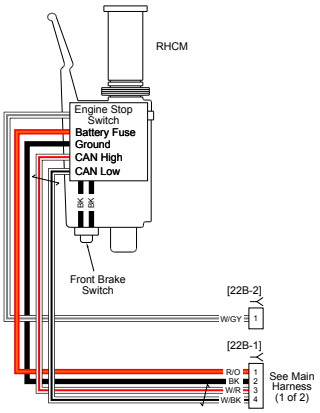

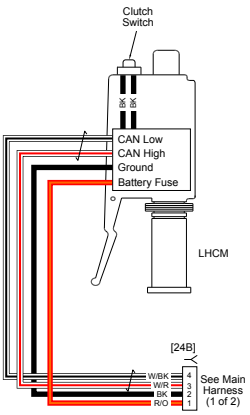

Front Lighting and Hand Controls: 2019 Sportster

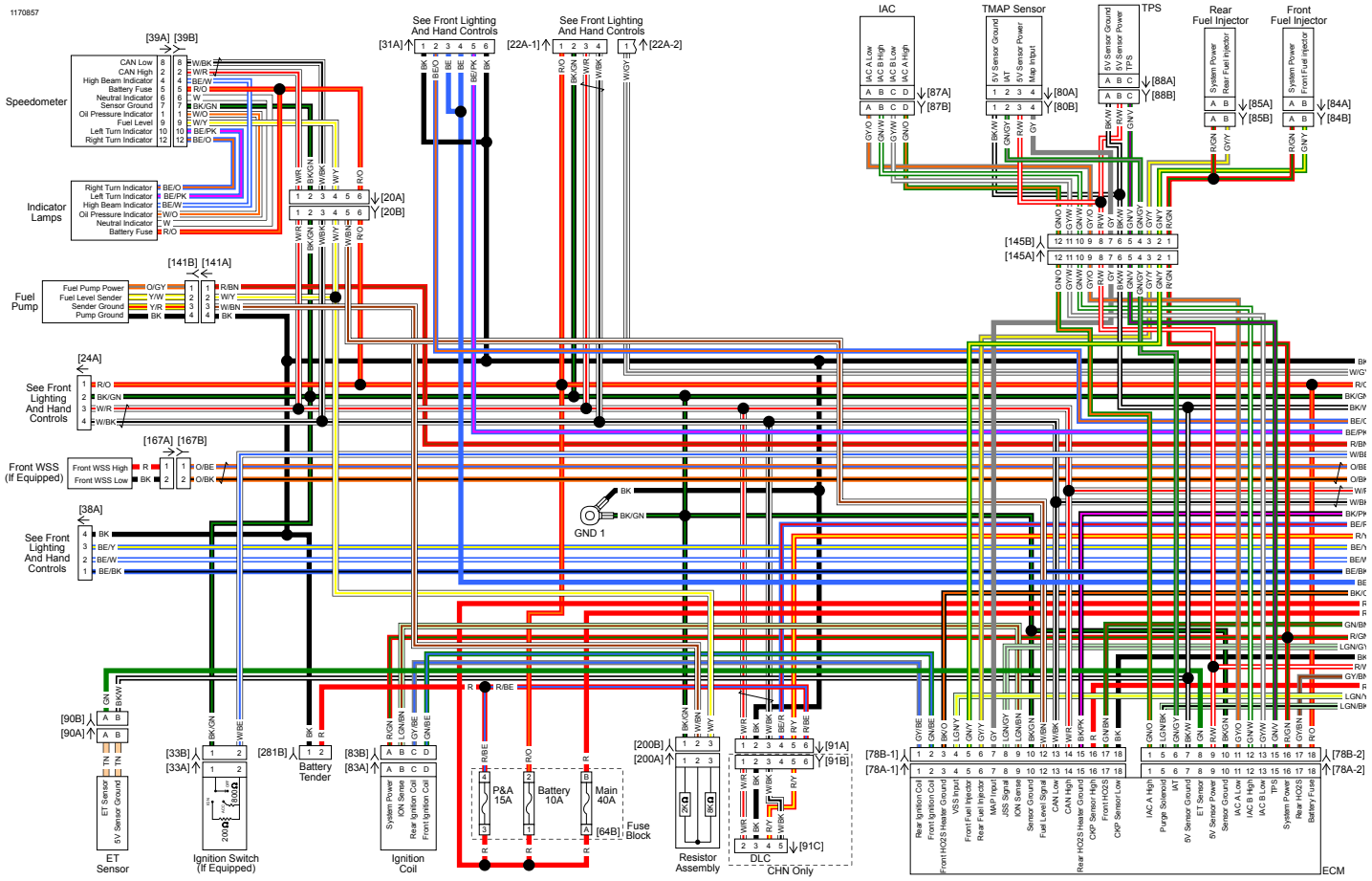

Main Harness 1 of 2: 2019 Sportster

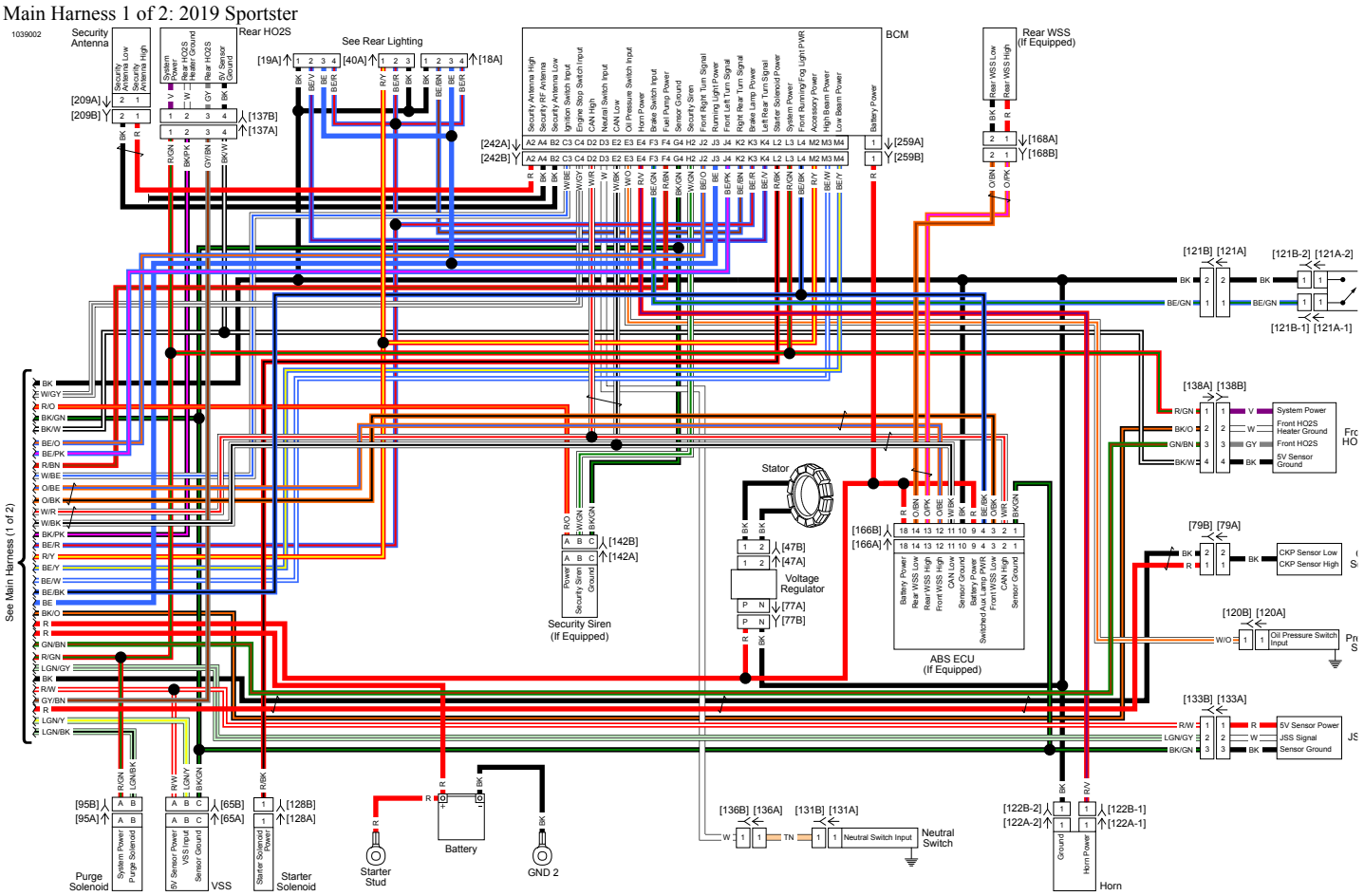

Main Harness 2 of 2: 2019 Sportster

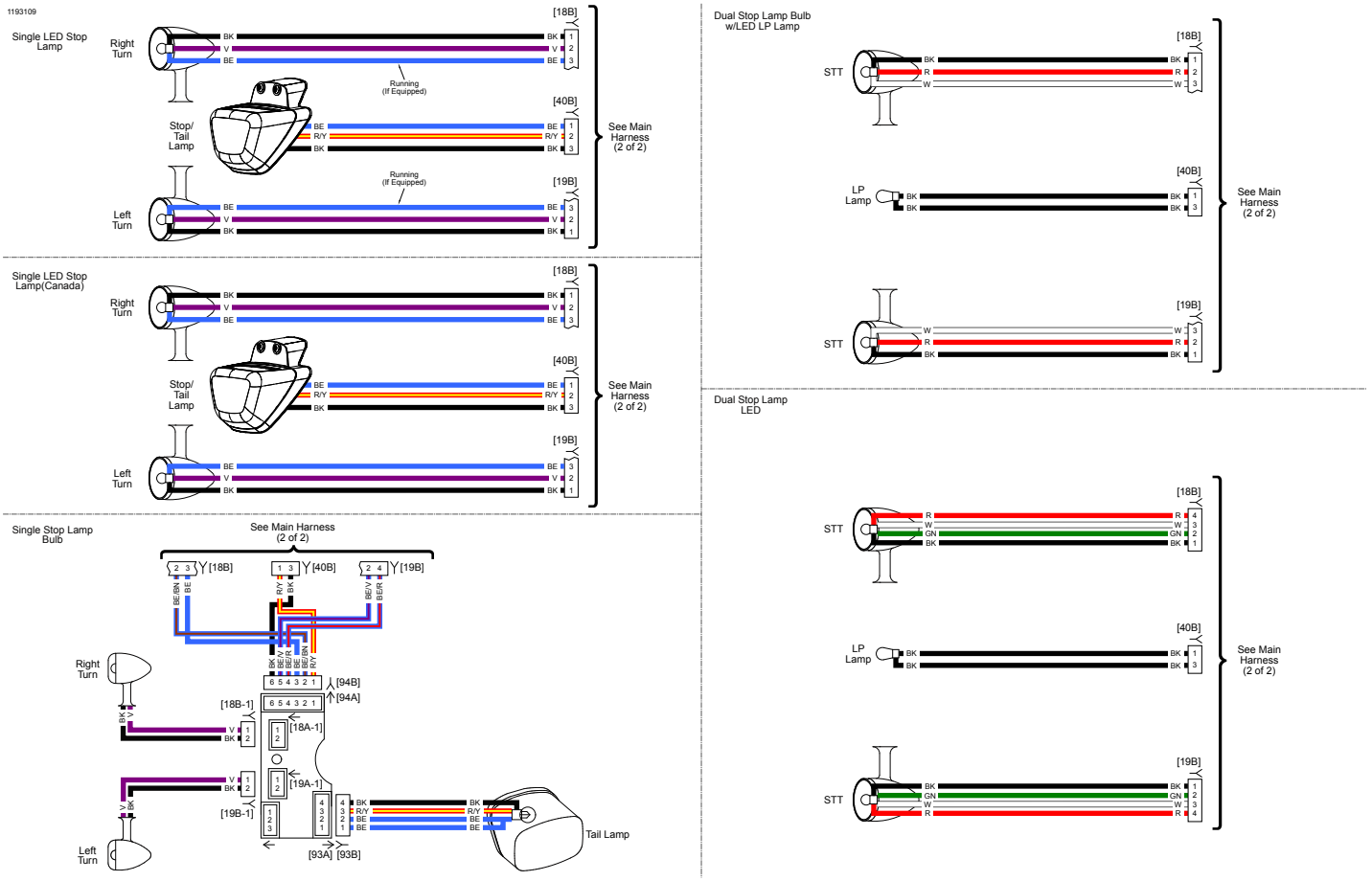

Rear Lighting: 2019 Sportster